Service Manual

Ver. 01 | 30-07-2025

EN



MULTI VARIABLE DHW
OUTDOOR UNITS

MV-E36BIDHW
MV-E42BIDHW

sinclair
AIR CONDITIONING

„ORIGINAL INSTRUCTIONS“

IMPORTANT NOTE:

Read this manual carefully before installing or operating your new air conditioning unit.
Make sure to save this manual for future reference.

Table of Contents

Part I : Technical Information 1
1. Summary 1
2. Specifications 2
3. Outline Dimension Diagram 6
4. Refrigerant System Diagram 7
5. Electrical Part 9
5.1 Wiring Diagram 9
5.2 PCB Printed Diagram 11
6. Function and Control 13
Part II : Installation and Maintenance 16
7. Notes for Installation and Maintenance 16
8. Installation 25
8.1 Combinations of Indoor and Outdoor Units 26
8.2 Electrical Connections 26
8.3 Installation of Outdoor Unit 28
8.4 Pipe Connection of Indoor Unit and Outdoor Unit 29
8.5 Pipe Connection of Water Tank 30
8.6 Bleeding 31
8.7 Maintenance 32
8.8 Installation Dimension Diagram 32
8.9 Check after Installation 33
9. Maintenance 34
9.1 Error Code List 34
9.2 Procedure of Troubleshooting 38
9.3 Troubleshooting for Normal Malfunction 48

10. Exploded View and Parts List.....50
11. Removal Procedure.....52
Appendix.....58
Appendix 1: Reference Sheet of Celsius and Fahrenheit.....58
Appendix 2: Pipe Expanding Method.....59
Appendix 3: List of Resistance for Temperature Sensor.....60

1. Summary

Outdoor Unit:

MV-E36BIDHW MV-E42BIDHW

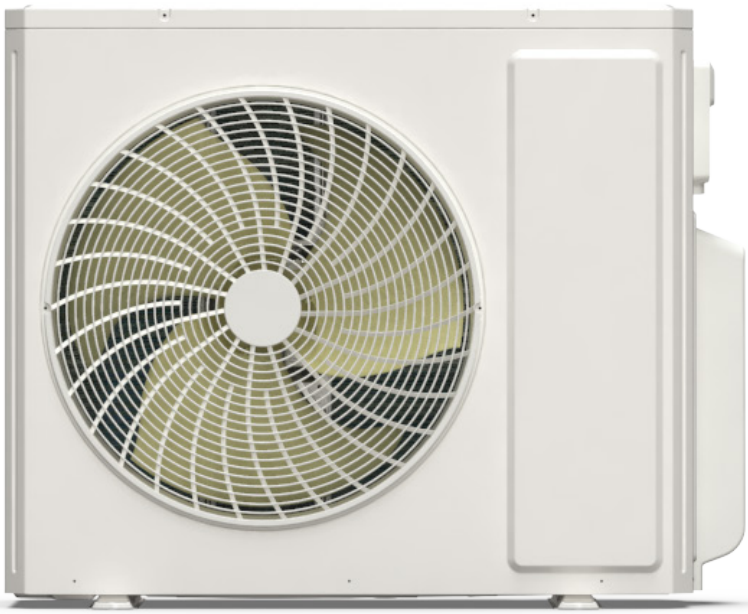

Model list:

No.	Model	Product Code	Water Tank Model	Water Tank Product Code	Wired Controller
1	MV-E36BIDHW	CB228W20400	MV-200WT	ER20000342	SWC-06WT
2	MV-E42BIDHW	CB228W20500			

2. Specifications

Model	-	MV-E36BIDHW
Product Code	-	CB228W20400
Rated Voltage	V~	220-240
Rated Frequency	Hz	50
Phases	-	1
Recommended Power Cable	mm^2	3G6
Cooling Capacity	kW	10.6
Heating Capacity	kW	12
Cooling Power Input	kW	2.95
Heating Power Input	kW	3.2
Cooling Current Input	A	13
Heating Current Input	A	14.0
Rated Input	kW	6.5
Rated Current	A	29.5
Air Flow Volume	m^3/h	5800
EER	W/W	3.66
COP	W/W	3.75
SEER	-	7.2
SCOP(Average/Warmer/Colder)	-	4.2/-/-
Hot Water Heating Capacity	kW	4.2
Rated Water Supply	L/h	90
Heating Water COP	W/W	4.56
Water Temperature Range	°C	35~55
Heating Water Operation Ambient Temperature Range	°C	-22~43
SCOPDHW(Average/Warmer/Colder)	-	2.74/3.43/2.00
Qelec(Average/Warmer/Colder)	kWh	4.25/3.4/5.83
ηWh(Average/Warmer/Colder)	%	115/145/83
Heating Water Sound Pressure Level	dB(A)	56
Heating Water Sound Power Level	dB(A)	63
Heating Water Rated Power Input	KW	2.5
Heating Water Power Input	KW	0.92
Heating Water Rated Current	A	11
Heating Water Current Input	A	4.0
Compressor Manufacturer	-	ZHUHAI LANDA COMPRESSOR CO., LTD.
Compressor Model	-	QXFS-D280zX070C
Compressor Refrigerant Oil Type	-	FW68DA or equivalent
Compressor Type	-	Twin Rotary
Compressor Locked Rotor Amp (L.R.A)	A	40
Compressor Rated Load Amp (RLA)	A	/
Compressor Power Input	W	2294
Compressor Thermal Protector	-	KSD115°C HPC115/95U1
Throttling Method	-	Electron expansion valve
Cooling Operation Ambient Temperature Range	°C	-15~43
Heating Operation Ambient Temperature Range	°C	-22~24
Condenser Material	-	Aluminum Fin-copper Tube
Condenser Pipe Diameter	mm	Φ7.94
Condenser Rows-fin Gap	mm	2-1.4
Condenser Coil Length (L×D×W)	mm	1066×792×38.1

Fan Motor Speed	r/min	Cooling: 860 / Heating: 860
Fan Motor Power Output	W	130
Motor Full Load Amp(FLA)	A	/
Fan Motor Capacitor	μF	/
Fan Type	-	Axial-flow
Fan Diameter	mm	Φ550-205
Defrosting Method	-	Automatic Defrosting
Climate Type	-	T1
Isolation	-	I
Moisture Protection	-	IPX4
Permissible Excessive Operating Pressure for the Discharge Side	MPa	4.3
Permissible Excessive Operating Pressure for the Suction Side	MPa	2.5
Sound Pressure Level	dB(A)	60
Sound Power Level	dB(A)	70
Dimension(WXHXD)	mm	1020X826X427
Dimension of Carton Box (LXWXH)	mm	1090X494X850
Dimension of Package(LXWXH)	mm	1095X500X955
Net Weight	kg	72.5
Gross Weight	kg	85.5
Refrigerant	-	R32
Refrigerant Charge	kg	2.4
Not Additional Gas Connection Pipe Length	m	40
Connection Pipe Gas Additional Charge	g/m	20
Outer Diameter of Liquid Pipe (British System Allocation)	inch	1/4, 1/4, 1/4, 1/4
Outer Diameter of Gas Pipe (British System Allocation)	inch	3/8, 3/8, 3/8, 3/8
Connection Pipe Max. Height Distance (indoor and indoor)	m	25
Connection Pipe Max. Height Distance (indoor and outdoor and indoor up)	m	25
Connection Pipe Max. Height Distance (indoor and outdoor and outdoor up)	m	25
Max. equivalent connection pipe length (outdoor to last indoor)	m	25
Connection Pipe Max. Length Distance (total lenght)	m	80
Connection Pipe Water In/Out Pipe Diameter	inch	0.59
Screw Thread connection	inch	0.5
Connecting Pipes Length (to Water Tank)	inch	0
Water Temperature Sensor Cable Length	m	5
Water Temperature Sensor Quantity	-	2
Heat Exchanger Type (Water Side)	-	microchannel heat exchanger
Heat Exchanger Quantity (Water Side)	-	1
Heat Exchanger Water Flow	L/min	/
Heat Exchanger Max. Pressure	bar	/
Heat Exchanger Pressure Drop	kPa	/
Water Tank Model1	-	MV-200WT
Water Tank Product Code1	-	ER20000342
Water Tank Model2	-	/
Water Tank Product Code2	-	/
Water Tank Model3	-	/
Water Tank Product Code3	-	/
Optional Software and Controller	-	SWC-06WT

The above data is subject to change without notice; please refer to the nameplate of the unit.

Model	-	MV-E42BIDHW
Product Code	-	CB228W20500
Rated Voltage	V~	220-240
Rated Frequency	Hz	50
Phases	-	1
Recommended Power Cable	mm^2	3G6
Cooling Capacity	kW	12.1
Heating Capacity	kW	13
Cooling Power Input	kW	3.4
Heating Power Input	kW	3.35
Cooling Current Input	A	15
Heating Current Input	A	14.8
Rated Input	kW	6.5
Rated Current	A	29.5
Air Flow Volume	m^3/h	5800
EER	W/W	3.56
COP	W/W	3.88
SEER	-	7.2(ηs,c=289)
SCOP(Average/Warmer/Colder)	-	4.1(ηs,h=160)/-/-
Hot Water Heating Capacity	kW	4.2
Rated Water Supply	L/h	90
Heating Water COP	W/W	4.56
Water Temperature Range	°C	35~55
Heating Water Operation Ambient Temperature Range	°C	-22~43
SCOPDHW(Average/Warmer/Colder)	-	2.74/3.43/2.00
Qelec(Average/Warmer/Colder)	kWh	4.25/3.4/5.83
ηWh(Average/Warmer/Colder)	%	115/145/83
Heating Water Sound Pressure Level	dB(A)	56
Heating Water Sound Power Level	dB(A)	63
Heating Water Rated Power Input	KW	2.5
Heating Water Power Input	KW	0.92
Heating Water Rated Current	A	11
Heating Water Current Input	A	4.0
Compressor Manufacturer	-	ZHUHAI LANDA COMPRESSOR CO., LTD.
Compressor Model	-	QXFS-D280zX070C
Compressor Refrigerant Oil Type	-	FW68DA or equivalent
Compressor Type	-	Twin Rotary
Compressor Locked Rotor Amp (L.R.A)	A	40
Compressor Rated Load Amp (RLA)	A	/
Compressor Power Input	W	2294
Compressor Thermal Protector	-	KSD115°C HPC115/95U1
Throttling Method	-	Electron expansion valve
Cooling Operation Ambient Temperature Range	°C	-15~43
Heating Operation Ambient Temperature Range	°C	-22~24
Condenser Material	-	Aluminum Fin-copper Tube
Condenser Pipe Diameter	mm	Φ7.94
Condenser Rows-fin Gap	mm	2-1.4
Condenser Coil Length (L×D×W)	mm	1066×792×38.1

Fan Motor Speed	r/min	Cooling: 860 / Heating: 860
Fan Motor Power Output	W	130
Motor Full Load Amp(FLA)	A	/
Fan Motor Capacitor	μF	/
Fan Type	-	Axial-flow
Fan Diameter	mm	Φ550-205
Defrosting Method	-	Automatic Defrosting
Climate Type	-	T1
Isolation	-	I
Moisture Protection	-	IPX4
Permissible Excessive Operating Pressure for the Discharge Side	MPa	4.3
Permissible Excessive Operating Pressure for the Suction Side	MPa	2.5
Sound Pressure Level	dB(A)	60
Sound Power Level	dB(A)	Cooling: 72 / Heating: 74
Dimension(WXHXD)	mm	1020X826X427
Dimension of Carton Box (LXWXH)	mm	1090X494X850
Dimension of Package(LXWXH)	mm	1095X500X955
Net Weight	kg	73.5
Gross Weight	kg	86.5
Refrigerant	-	R32
Refrigerant Charge	kg	2.4
Not Additional Gas Connection Pipe Length	m	50
Connection Pipe Gas Additional Charge	g/m	20
Outer Diameter of Liquid Pipe (British System Allocation)	inch	1/4, 1/4, 1/4, 1/4, 1/4
Outer Diameter of Gas Pipe (British System Allocation)	inch	3/8, 3/8, 3/8, 3/8, 3/8
Connection Pipe Max. Height Distance (indoor and indoor)	m	25
Connection Pipe Max. Height Distance (indoor and outdoor and indoor up)	m	25
Connection Pipe Max. Height Distance (indoor and outdoor and outdoor up)	m	25
Max. equivalent connection pipe length (outdoor to last indoor)	m	25
Connection Pipe Max. Length Distance (total lenght)	m	100
Connection Pipe Water In/Out Pipe Diameter	inch	0.59
Screw Thread connection	inch	0.5
Connecting Pipes Length (to Water Tank)	inch	0
Water Temperature Sensor Cable Length	m	5
Water Temperature Sensor Quantity	-	2
Heat Exchanger Type (Water Side)	-	microchannel heat exchanger
Heat Exchanger Quantity (Water Side)	-	1
Heat Exchanger Water Flow	L/min	/
Heat Exchanger Max. Pressure	bar	/
Heat Exchanger Pressure Drop	kPa	/
Water Tank Model1	-	MV-200WT
Water Tank Product Code1	-	ER20000342
Water Tank Model2	-	/
Water Tank Product Code2	-	/
Water Tank Model3	-	/
Water Tank Product Code3	-	/
Optional Software and Controller	-	SWC-06WT

The above data is subject to change without notice; please refer to the nameplate of the unit.

3. Outline Dimension Diagram

MV-E36BIDHW MV-E42BIDHW

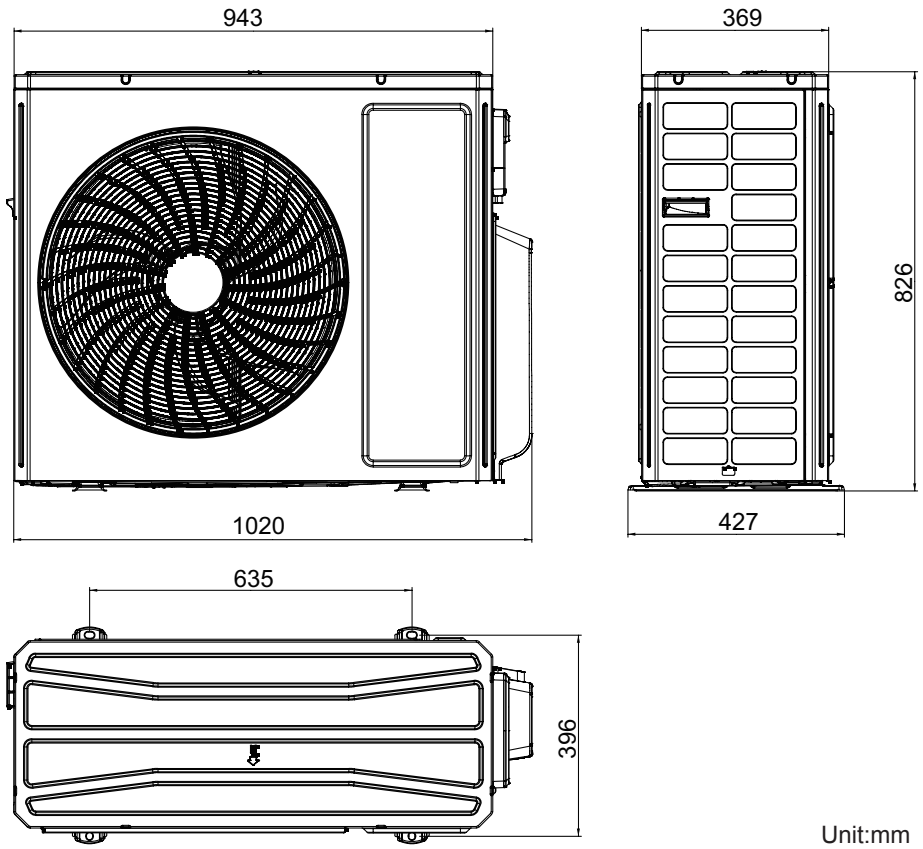

Unit:mm

4. Refrigerant System Diagram

MV-E36BIDHW

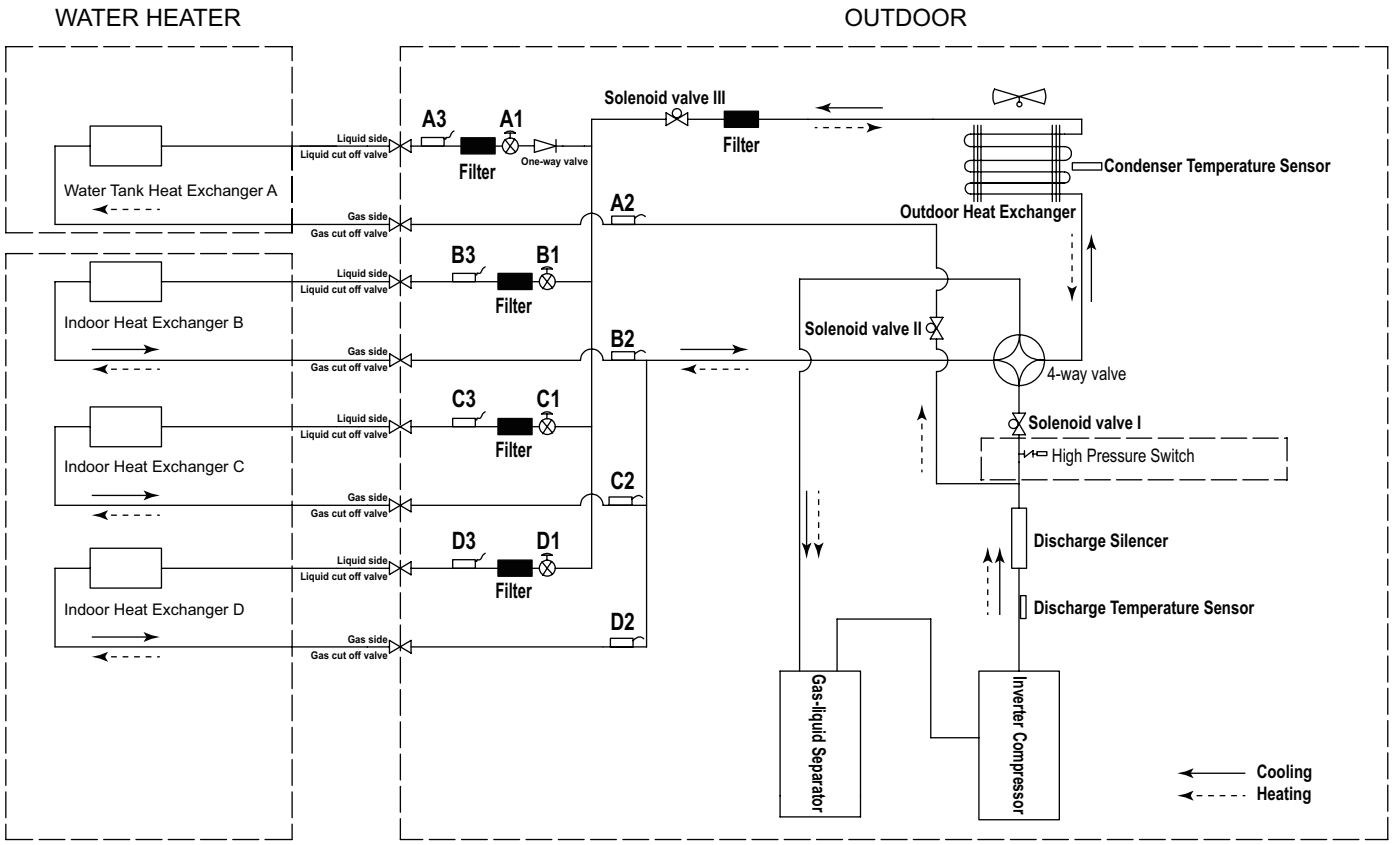

AIR CONDITIONING INDOOR PART

A1:A-unit Electronic Expansion Valve
B1:B-unit Electronic Expansion Valve
C1:C-unit Electronic Expansion Valve
D1:D-unit Electronic Expansion Valve

A2:A-unit Gas Pipe Temperature Sensor
B2:B-unit Gas Pipe Temperature Sensor
C2:C-unit Gas Pipe Temperature Sensor
D2:D-unit Gas Pipe Temperature Sensor

A3:A-unit Liquid Pipe Temperature Sensor
B3:B-unit Liquid Pipe Temperature Sensor
C3:C-unit Liquid Pipe Temperature Sensor
D3:D-unit Liquid Pipe Temperature Sensor

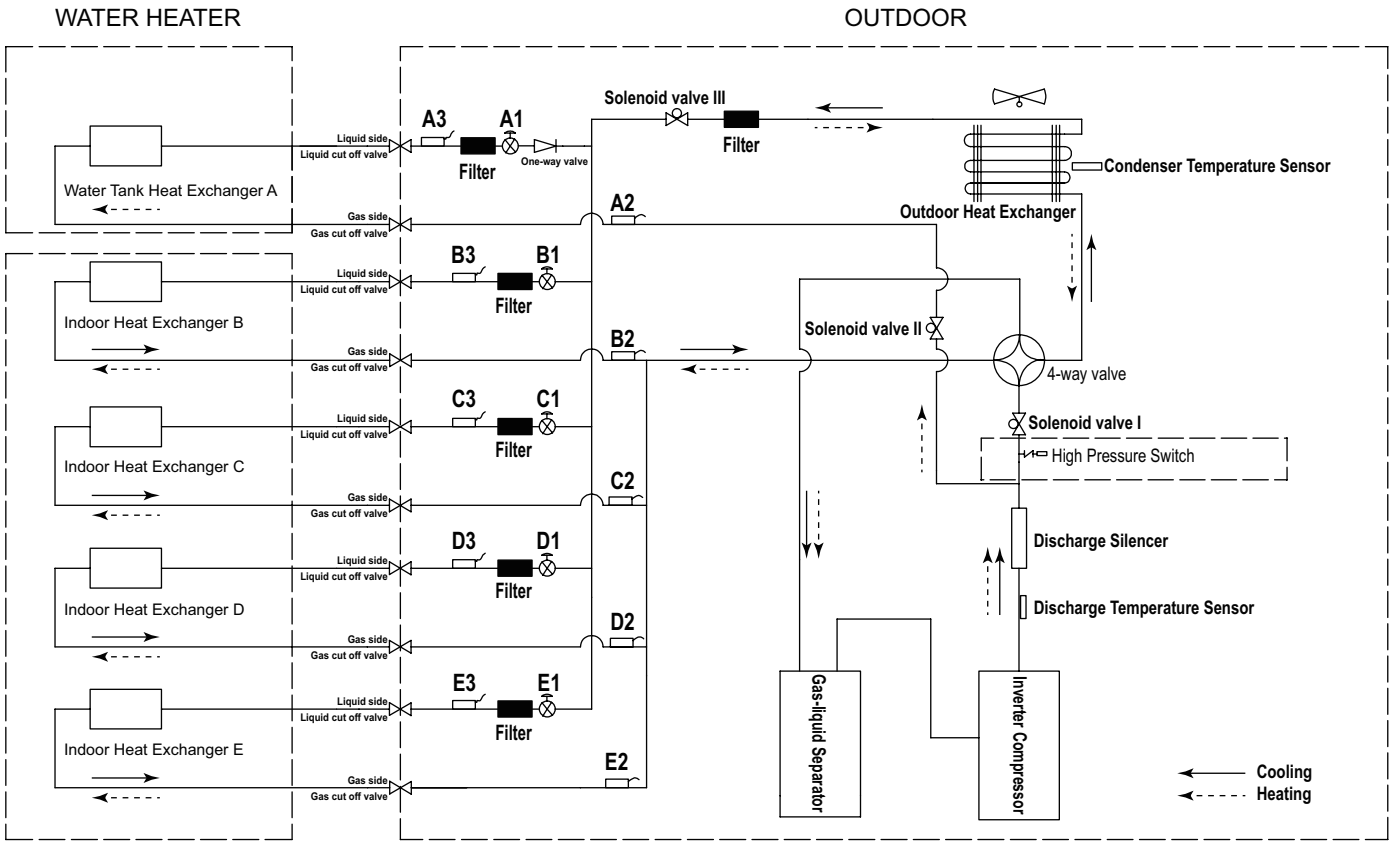

AIR CONDITIONING INDOOR PART

A1: A-unit Electronic Expansion Valve
B1: B-unit Electronic Expansion Valve
C1: C-unit Electronic Expansion Valve
D1: D-unit Electronic Expansion Valve
E1: E-unit Electronic Expansion Valve

A2: A-unit Gas Pipe Temperature Sensor
B2: B-unit Gas Pipe Temperature Sensor
C2: C-unit Gas Pipe Temperature Sensor
D2: D-unit Gas Pipe Temperature Sensor
E2: E-unit Gas Pipe Temperature Sensor

A3: A-unit Liquid Pipe Temperature Sensor
B3: B-unit Liquid Pipe Temperature Sensor
C3: C-unit Liquid Pipe Temperature Sensor
D3: D-unit Liquid Pipe Temperature Sensor
E3: E-unit Liquid Pipe Temperature Sensor

5. Electrical Part

5.1 Wiring Diagram

● Instruction

Symbol	Symbol Color	Symbol	Symbol Color	Symbol	Name
WH	White	GN	Green	COMP	Compressor
YE	Yellow	BN	Brown	⏚	Grounding wire
RD	Red	BU	Blue	/	/
YEGN	Yellow/Green	BK	Black	/	/
VT	Violet	OG	Orange	/	/

● Outdoor Unit

MV-E36BIDHW

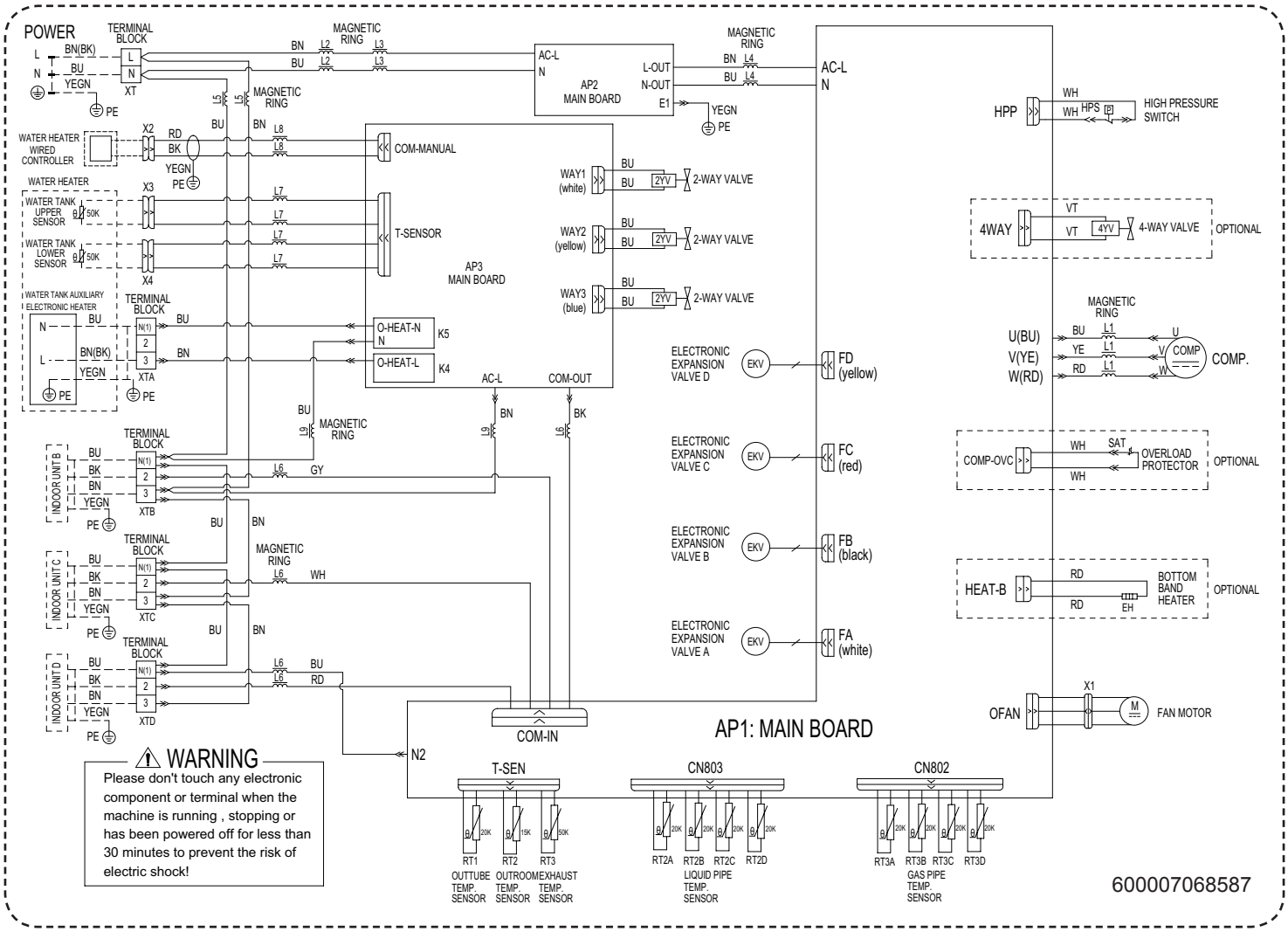

MV-E42BIDHW

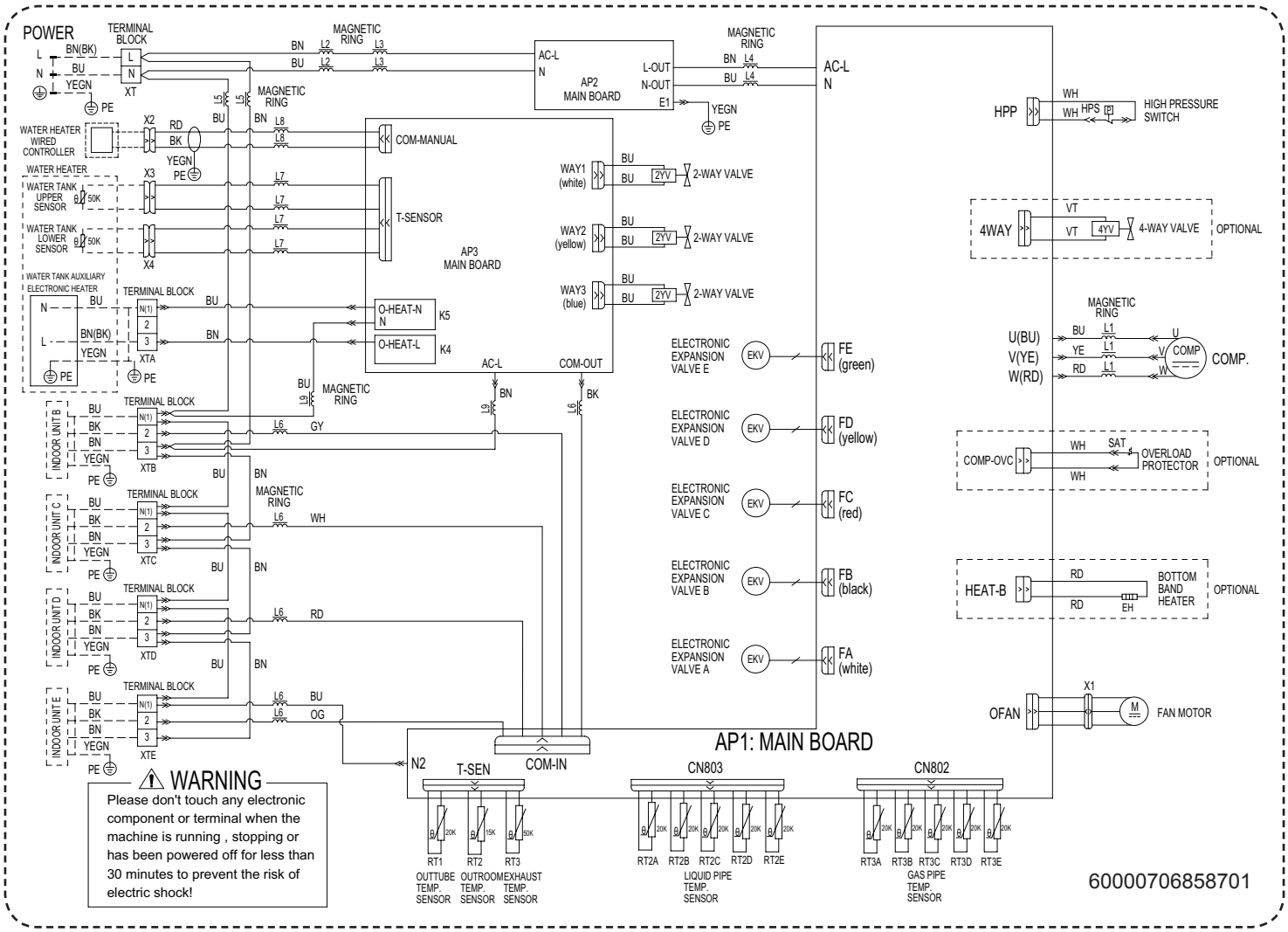

These wiring diagrams are subject to change without notice; please refer to the one supplied with the unit.

5.2 PCB Printed Diagram

(1) Silk screen on main board 1

MV-E36BIDHW MV-E42BIDHW

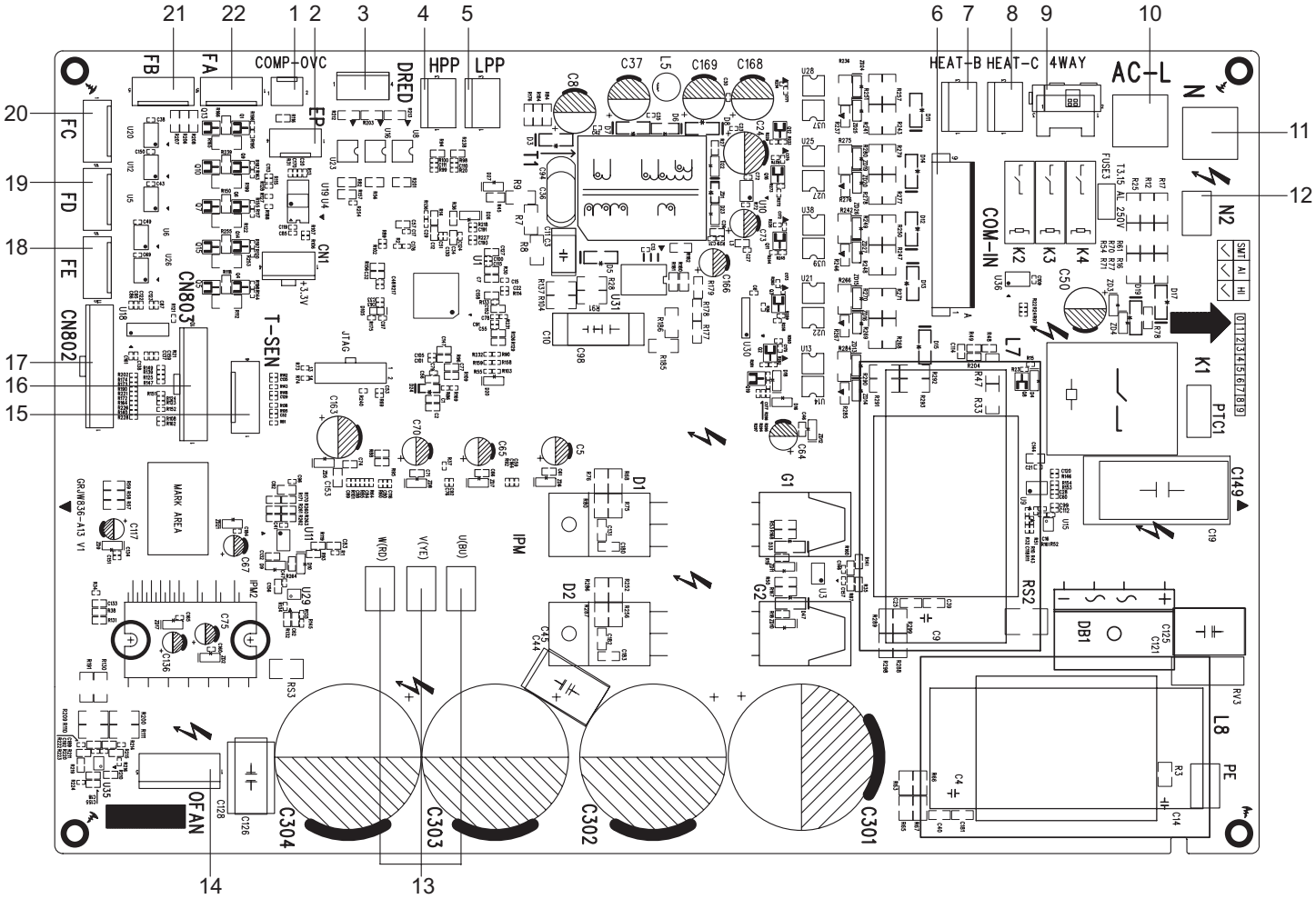

No.	Name	No.	Name
1	Compressor Overload Needle Stand	12	Communication Neutral Wire Insertion
2	EEP Flash Drive Needle Stand	13	Compressor Wire Insertion
3	DRED Needle Stand	14	Outdoor Fan Needle Stand
4	High Pressure Protection Needle Stand	15	Temperature Sensor Needle Stand
5	Low Pressure Protection Needle Stand	16	Liquid Valve Temperature Sensor Needle Stand
6	Communication Wire Insertion	17	Gas Valve Temperature Sensor Needle Stand
7	Chassis Electric Heating Belt Needle Stand	18	Electronic Expansion Valve E
8	Compressor Electric Heating Belt Needle Stand	19	Electronic Expansion Valve D
9	Four-way Valve Needle Stand	20	Electronic Expansion Valve C
10	Live Wire Insertion	21	Electronic Expansion Valve B
11	Neutral Wire Insertion	22	Electronic Expansion Valve A

(2) Silk screen on main board 2

MV-E36BIDHW MV-E42BIDHW

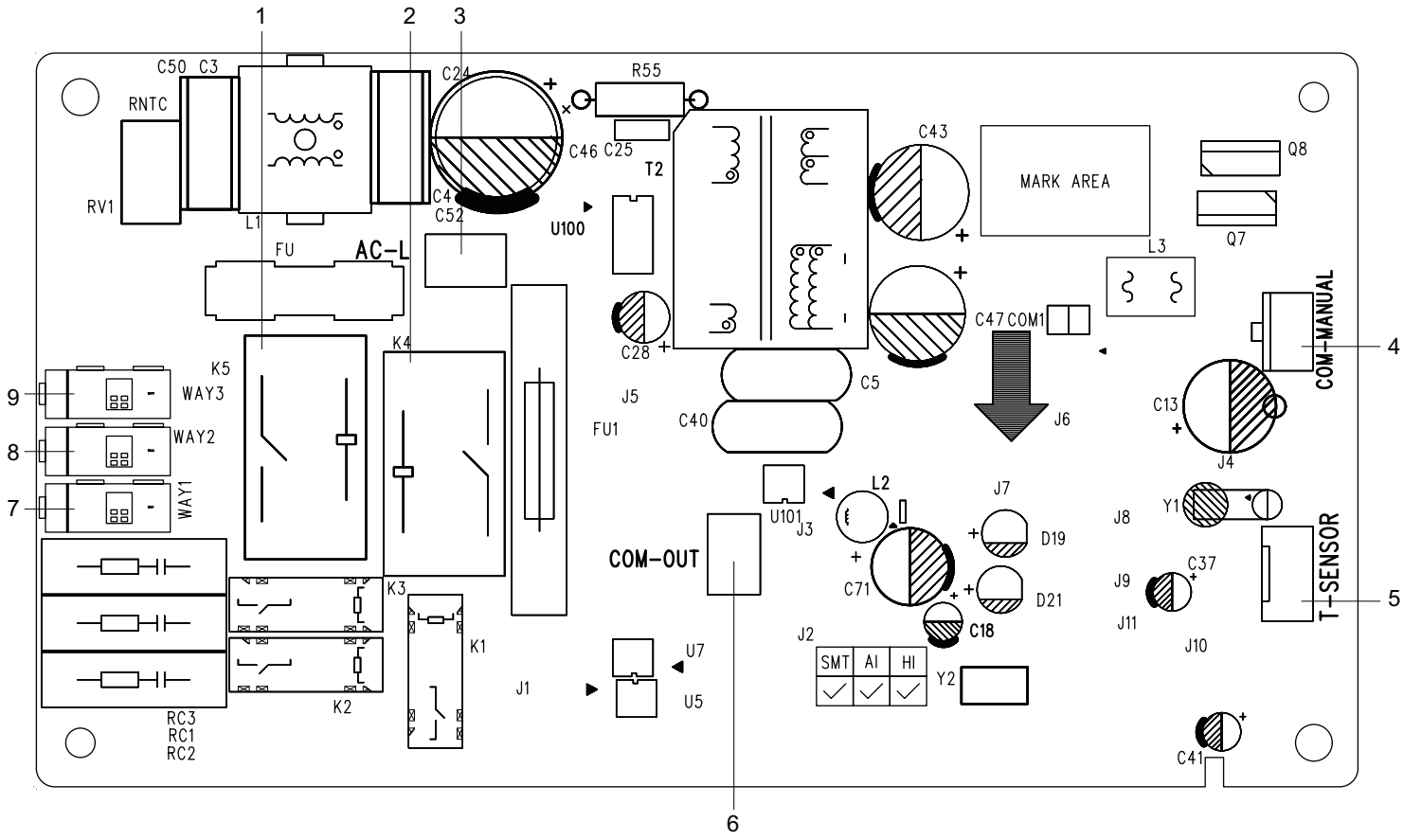

No.	Name	No.	Name
1	Water Tank Auxiliary Electronic Heater Neutral Wire Insertion	6	Communication Wire Insertion
2	Water Tank Auxiliary Electronic Heater Live Wire Insertion	7	Two-way Valve Needle Stand 1
3	Live Wire Insertion	8	Two-way Valve Needle Stand 2
4	Water Heater Wired Controller Needle Stand	9	Two-way Valve Needle Stand 3
5	Water Tank Temperature Sensor Needle Stand		

1 Basic functions of the system

1.1 Cooling Mode

1.1.1 Cooling conditions and process:

If the compressor is in stop status and start the unit for cooling operation, when one of the indoor units reaches the cooling operation condition, the unit start cooling operation; in this case, the electronic expansion valve, the outdoor fan and the compressor start operation.

1.1.2 Stop in cooling operation

1.1.2.1 Compressor stops

The compressor stops immediately; the outdoor fan stops after 1min.

1.1.2.2 Some of the indoor units reach the stop condition (the compressor does not stop)

The compressor operates immediately according to the required frequency. For the indoor unit with no requirement, the corresponding electronic expansion valve is closed to 0P.

1.1.3 Cooling mode transfers to heating mode

When the unit transfers to heating mode, the 4-way valve is energized after the compressor stops for 2min. The other disposals are the same as stopping in cooling mode.

1.1.4 4-way valve: in this mode, the 4-way valve is closed.

1.1.5 Outdoor fan control in cooling mode

The outdoor fan starts before 5s of the starting of compressor. The outdoor fan will run in high speed for 3min after starting and then it will run in set speed. The fan shall run at every speed for at least 80s. (When the quantity of running indoor unit is changed, the unit will enter the control described in 1.3.5.1 and 1.3.5.2);

When the compressor stops, the outdoor fan runs at present speed and stops after 1min.

1.2 Dry Mode

1.2.1 The dry conditions and process are the same as those in cooling mode;

1.2.2 The status of 4-way valve: closed;

1.2.3 The temperature setting range: 16 ~ 30°C;

1.2.4 Protection function: the same as those in cooling mode;

1.2.5 In dry mode, the maximum value A of the capacity requirement percentage of single unit is 90% of that in cooling mode.

The open condition of the electronic expansion valve, outdoor fan and compressor is the same as those in cooling mode.

1.3 Heating Mode

1.3.1 Heating conditions and process:

When one of the indoor units reaches the heating operation condition, the unit starts heating operation.

1.3.2 Stop in heating operation:

1.3.2.1 When all the indoor units reach the stop condition, the compressor stops and the outdoor fan stops after 1min;

1.3.2.2 Some of the indoor units reach the stop condition

The compressor reduces the frequency immediately and operates according to the required frequency;

1.3.2.3 Heating mode transfers to cooling mode (dry mode), fan mode

a. The compressor stops; b. the power of 4-way valve is cut off after 2min; c. the outdoor fan stops after 1min; d. the status of 4-way valve: energized;

1.3.3 Outdoor fan control in heating mode

The outdoor fan starts before 5s of the starting of compressor and then it will run in high speed for 40s;

The fan shall run at every speed for at least 80s;

When the compressor stops, the outdoor fan stops after 1min.

1.3.4 Defrosting function

When the defrosting condition is met, the compressor stops; the electronic expansion valve of all indoor units open in big angle; the outdoor fan stops after 40s of the stop of compressor, meanwhile, the 4-way valve reverses the direction; after the 4-way valve reverses the direction, the compressor starts; then begin to calculate the time of defrosting, the frequency of the compressor rises to reach the defrosting frequency.

1.3.5 Oil-returned control in heating mode

1.3.5.1 Oil-returned condition

The whole unit is operating in low frequency for a long time.

1.3.5.2 Oil-returned process in heating mode

The indoor unit displays "H1".

1.3.5.3 Oil-returned finished condition in heating mode

The duration reaches 5min.

1.4 Hot water Mode

1.4.1 Hot water Mode conditions and process:

No matter what mode the other indoor units are currently in, when the water heater reaches the heat pump operating condition, the unit will start to produce hot water.

1.4.2 Stop in hot water mode operation:

1.4.2.1 When the water heater reaches the stop condition, the compressor stops and the outdoor fan stop after 1min;

1.4.2.2 Hot water mode transfers to cooling mode (dry mode), heating mode, fan mode

a. The compressor stops;

b. the power of 4-way valve is cut off after 2min;

c. the outdoor fan stops after 1min;

d. the status of 4-way valve: energized;

1.4.3 Outdoor fan control in hot water mode

The outdoor fan starts before 5s of the starting of compressor and then it will run in high speed for 40s

The fan shall run at every speed for at least 80s

When the compressor stops, the outdoor fan stops after 1min

1.4.4 Defrosting function

When the defrosting condition is met, the compressor stops; the electronic expansion valve of all indoor units open in big angle; the outdoor fan stops after 40s of the stop of compressor, meanwhile, the 4-way valve reverses the direction; after the 4-way valve reverses the direction, the compressor starts; then begin to calculate the time of defrosting, the frequency of the compressor rises to reach the defrosting frequency.

1.4.5 Oil-returned control in hot water mode

1.4.5.1 Oil-returned condition

The whole unit is operating in low frequency for a long time

1.4.5.2 Oil-returned process in hot water mode

High frequency operation of compressor

1.4.5.3 Oil-returned finished condition in hot water mode

The duration reaches 5min

1.5 Fan Mode

The compressor, the outdoor fan and the 4-way valve are closed; temperature setting range is 16 ~ 30°C.

2 Protection Function

2.1 Mode Conflict Protection of indoor unit

When the setting mode is different of different indoor unit, the unit runs in below status:

a. The mode of the first operating indoor unit is the basic mode, then compare the mode of the other indoor units to see if there is a conflict. Cooling mode (dry mode) is in conflict with heating mode.

b. Fan mode is in conflict with heating mode and the heating mode is the basic mode. No matter which indoor unit operates first, the unit will run in heating mode.

2.2 Overload protection function

When the tube temperature is a little low, the compressor raises the operation frequency; when the tube temperature is a little high, the compressor frequency is restricted or lows down the operation frequency; when the tube temperature is too high, the compressor protection stops running.

If the discharge temperature protection continuously appears for 6 times, the compressor can't resume running. The compressor can resume running after cutting off the power and then putting through the power. (if the running time of the compressor is longer than 7min, the protection times record will be cleared)

2.3 Discharge Protection Function

When the discharge temperature is a little low, the compressor raises the operation frequency; when the discharge temperature is a little high, the compressor frequency is restricted or lows down the operation frequency; when the discharge temperature is too high, the compressor protection stops running.

If the discharge temperature protection continuously appears for 6 times, the compressor can't resume running. The compressor can resume running after cutting off the power and then putting

through the power. (if the running time of the compressor is longer than 7min, the protection times record will be cleared.)

2.4 Communication malfunction

Detection of the quantity of installed indoor units:

After 3min of energizing, if the outdoor unit does not receive the communication data of certain indoor unit, the outdoor unit will judge that indoor unit is not installed and will treat it as it is not installed. If the outdoor unit receives the communication data of that indoor unit later, the outdoor unit will treat that unit as it is installed.

2.5 Overcurrent Protection

a. Overcurrent protection of complete unit;

b. phase wires current protection;

c. compressor phase current protection

2.6 Compressor high-pressure protection

2.6.1 When the high-pressure switch is detected cut off for 3s continuously, the compressor will enter high-pressure protection as it stops when reaching set temperature. Meanwhile, the outdoor unit will send the signal of "high-pressure protection" to the indoor units;

2.6.2 After the appearance of high-pressure protection, when the high-pressure switch is detected closed for 6s continuously, the compressor can resume running only after cutting off the power and then putting through the power.

2.7 Compressor overload protection

If the compressor overload switch is detected having movement, the indoor unit will display the corresponding malfunction as it stops when the indoor temperature reaching set temperature. When the compressor stops for more than 3min and the compressor overload switch is reset, the unit will resume operation status automatically. If the protection appears for more than 6 times (if the running time of the compressor is longer than 30min, the protection times record will be cleared), the unit cannot resume operation status automatically, but can resume running only after cutting off the power and then putting through the power.

2.8 Compressor Phase-lacking Protection

When the compressor starts, if one of the three phases is detected open, the compressor will enter phase-lacking protection. The malfunction will be cleared after 1min, the unit will restart and then detect if there is still has phase-lacking protection. If the phase-lacking protection is detected for 6 times continuously, the compressor will not restart but can resume running only after cutting off the power and then putting through the power. If the running time of the compressor is longer than 7min, the protection times record will be cleared.

2.9 IPM Protection

2.9.1 When the IPM module protection is detected, the unit will stop as the indoor temperature reaching set temperature, PFC is closed, display IPM protection malfunction. After the compressor stops for 3min, the unit will resume operation status automatically; if the IPM protection is detected for more than 6 times continuously (If the running time of the compressor is longer than 7min, the protection times record will be cleared), the system will stop and send the signal of module protection to indoor unit. The unit cannot resume operation status automatically, but can resume running only after cutting off the power and then putting through the power.

2.9.2 IPM module overheating protection

2.9.2.1 When T_{IPM}>87°C, prohibit to raise frequency;

2.9.2.2 When T_{IPM}>=90°C, the operation frequency of compressor lows down by 15% every 90s according to the present capacity requirement of the complete unit. It will keep 90s after lowing down the frequency. After lowing down the frequency, if T_{IPM}>=90°C, the unit will circulate the above movement until reaching the minimum frequency; if 87°C<T_{IPM}<90°C, the unit will run at this frequency; when T_{IPM}<=87°C, the unit will run at the frequency according to the capacity requirement.

2.9.2.3 When T_{IPM}>=95°C, the compressor stops. After the compressor stops for 3min, if T_{IPM}<87°C, the compressor and the outdoor fan will resume operation.

7. Notes for Installation and Maintenance

Safety Precautions: Important!

Please read the safety precautions carefully before installation and maintenance.

The following contents are very important for installation and maintenance.

Please follow the instructions below.

• The installation or maintenance must accord with the instructions.

• Comply with all national electrical codes and local electrical codes.

• Pay attention to the warnings and cautions in this manual.

• All installation and maintenance shall be performed by distributor or qualified person.

• All electric work must be performed by a licensed technician according to local regulations and the instructions given in this manual.

• Be caution during installation and maintenance. Prohibit incorrect operation to prevent electric shock, casualty and other accidents.

⚠ WARNINGS

Electrical Safety Precautions:

1. Cut off the power supply of the unit before checking and maintenance.

2. The unit must apply specialized circuit and prohibit share the same circuit with other appliances.

3. The unit should be installed in suitable location and ensure the power plug is touchable.

4. Make sure each wiring terminal is connected firmly during installation and maintenance.

5. Have the unit adequately grounded. The grounding wire can't be used for other purposes.

6. Must apply protective accessories such as protective boards, cable-cross loop and wire clip.

7. The live wire, neutral wire and grounding wire of power supply must be corresponding to the live wire, neutral wire and grounding wire of the the unit.

8. The power cord and power connection wires can't be pressed by hard objects.

9. If power cord or connection wire is broken, it must be replaced by a qualified person.

10. If the power cord or connection wire is not long enough, please get the specialized power cord or connection wire from the manufacture or distributor. Prohibit prolong the wire by yourself.

11. For the unit without plug, an air switch must be installed in the circuit. The air switch should be all-pole parting and the contact parting distance should be more than 3mm.

12. Make sure all wires and pipes are connected properly and the valves are opened before energizing.

13. Check if there is electric leakage on the unit body. If yes, please eliminate the electric leakage.

14. Replace the fuse with a new one of the same specification if it is burnt down; Don't replace it with a cooper wire or conducting wire.

15. If the unit is to be installed in a humid place, the circuit breaker must be installed.

Installation Safety Precautions:

1. Select the installation location according to the requirement of this manual. (See the requirements in installation part)

2. Handle unit transportation with care; the unit should not be carried by only one person if it is more than 20kg.

3. When installing the indoor unit and outdoor unit, a sufficient fixing bolt must be installed; make sure the installation support is firm.

4. Ware safety belt if the height of working is above 2m.

5. Use equipped components or appointed components during installation.

6. Make sure no foreign objects are left in the unit after finishing installation.

Refrigerant Safety Precautions:

1. When refrigerant leaks or requires discharge during installation, maintenance, or disassembly, it should be handled by certified professionals or otherwise in compliance with local laws and regulations.

2. Avoid contact between refrigerant and fire as it generates poisonous gas; Prohibit prolong the connection pipe by welding.

3. Apply specified refrigerant only. Never have it mixed with any other refrigerant. Never have air remain in the refrigerant line as it may lead to rupture or other hazards.

4. Make sure no refrigerant gas is leaking out when installation is completed.

5. If there is refrigerant leakage, please take sufficient measure to minimize the density of refrigerant.

6. Never touch the refrigerant piping or compressor without wearing glove to avoid scald or frostbite.

Improper installation may lead to fire hazard, explosion, electric shock or injury.

Safety Precautions for Installing and Relocating the Unit:

To ensure safety, please be mindful of the following precautions.

⚠WARNINGS

1. When installing or relocating the unit, be sure to keep the refrigerant circuit free from air or substances other than the specified refrigerant.

Any presence of air or other foreign substance in the refrigerant circuit will cause system pressure rise or compressor rupture, resulting in injury.

2. When installing or moving this unit, do not charge the refrigerant which is not comply with that on the nameplate or unqualified refrigerant.

Otherwise, it may cause abnormal operation, wrong action, mechanical malfunction or even series safety accident.

3. When refrigerant needs to be recovered during relocating or repairing the unit, the following steps need to be followed for refrigerant recovery.

Step 1: Completely close two valves of road A;

Step 2: Connect the fluorine injection nozzle at the gas valve of Road A and the fluorine injection nozzle at any gas valve of BCDE with a rubber hose similar to the following figure, and tighten it. Note that the middle switch before connecting this rubber hose is closed;

Step 3: Open the switch in the middle of the rubber tube;

Step 4: All air conditioner is running in cooling mode.;

Step 5: Completely close the valve at high pressure side (liquid valve) of road BCDE. After about 2 minutes, completely close the valve at low pressure side (gas valve) of road BCDE, immediately stop the unit and disconnect the power supply. Please note that the time for refrigerant recovery should not exceed 4 minutes;

Step 6: Turn off the switch in the middle of the above rubber tube and remove it

If refrigerant recovery takes too much time, air may be sucked in and cause pressure rise or compressor rupture, resulting in injury.

4. During refrigerant recovery, make sure that liquid valve and gas valve are fully closed and power is disconnected before detaching the connection pipe.

If compressor starts running when stop valve is open and connection pipe is not yet connected, air will be sucked in and cause pressure rise or compressor rupture, resulting in injury.

5. When installing the unit, make sure that connection pipe is securely connected before the compressor starts running.

If compressor starts running when stop valve is open and connection pipe is not yet connected, air will be sucked in and cause pressure rise or compressor rupture, resulting in injury.

6. Prohibit installing the unit at the place where there may be leaked corrosive gas or flammable gas.

If there leaked gas around the unit, it may cause explosion and other accidents.

7. Do not use extension cords for electrical connections. If the electric wire is not long enough, please contact a local service center authorized and ask for a proper electric wire.

Poor connections may lead to electric shock or fire.

8. Use the specified types of wires for electrical connections between the indoor and outdoor units. Firmly clamp the wires so that their terminals receive no external stresses.

Electric wires with insufficient capacity, wrong wire connections and insecure wire terminals may cause electric shock or fire.



Installation of rubber hose



Rubber tube joint



Refrigerant recycling device

Safety Precautions for Refrigerant

• To realize the function of the air conditioner unit, a special refrigerant circulates in the system. The used refrigerant is the fluoride R32, which is specially cleaned. The refrigerant is flammable and inodorous. Furthermore, it can leads to explosion under certain conditions. But the flammability of the refrigerant is very low. It can be ignited only by fire.

• Compared to common refrigerants, R32 is a nonpolluting refrigerant with no harm to the ozonosphere. The influence upon the greenhouse effect is also lower. R32 has got very good thermodynamic features which lead to a really high energy efficiency. The units therefore need a less filling.

WARNING

Do not use means to accelerate the defrosting process or to clean, other than those recommended by the manufacture. Should repair be necessary, contact your nearest authorized Service Centre. Any repairs carried out by unqualified personnel may be dangerous. The appliance shall be stored in a room without continuously operating ignition sources. (For example: open flames, an operating gas appliance or an operating electric heater.) Do not pierce or burn. Appliance shall be installed, operated and stored in a room with a floor area larger than Xm^2. (Please refer to table "a" in section of "Safety operation of flammable refrigerant" for space X.) Appliance filled with flammable gas R32. For repairs, strictly follow manufacturer's instructions only. Be aware that refrigerants may not contain an odour. Read specialist's manual.



This appliance is not intended for use by persons (including children) with reduced physical, sensory or mental capabilities, or lack of experience an d knowledge, unless they have been given supervision or instruction concerning use of the appliance by a person responsible for their safety. Children should be supervised to ensure that they do not play with the appliance.

Hereby, Our company, declares that this Air Conditioner is in compliance with the essential requirement and other relevant provisions of RE Directive 2014/53/EU. A copy of the full DoC is attached. Wireless frequency range: 2412MHz - 2472MHz Maximum Transmit Power: 18dBm



R32: 675

This marking indicates that this product should not be disposed with other house hold wastes. To prevent possible harm to the environment or human health from uncontrolled waste throughout the EU. To prevent possible harm to the environment or human health.

From uncontrolled waste disposal, recycle it responsibly to promote the sustainable reuse of material resources. To return your used device, please use the return and collection systems or contact the retailer where the product was purchased. They can take this product for environmental safe recycling.

If it needs to install, move or maintain the unit, please contact dealer or local service center to conduct it at first. The unit must be installed, moved or maintained by appointed unit. Otherwise, it may cause serious damage or personal injury or death.

Safety Operation of Flammable Refrigerant

1. Qualification requirement for installation and maintenance man

• All the work men who are engaging in the refrigeration system should bear the valid certification awarded by the authoritative organization and the qualification for dealing with the refrigeration system recognized by this industry. If it needs other technician to maintain and repair the appliance, they should be supervised by the person who bears the qualification for using the flammable refrigerant.

• It can only be repaired by the method suggested by the equipments manufacturer.

2. Installation notes

• The air conditioner must be installed in a room that is larger than the minimum room area. The minimum room area is shown on the nameplate or following table a.

• It is not allowed to drill hole or burn the connection pipe.

• Leak test is a must after installation.

table a - Minimum room area (m^2)

Charge amount (kg)	Floor location	Window mounted	Wall mounted	Ceiling mounted
≤1.2	/	/	/	/
1.3	14.5	5.2	1.6	2.6
1.4	16.8	6.1	1.9	2.8
1.5	19.3	7	2.1	3
1.6	22	7.9	2.4	3.2
1.7	24.8	8.9	2.8	3.4
1.8	27.8	10	3.1	3.6
1.9	31	11.2	3.4	3.8
2.0	34.3	12.4	3.8	4
2.1	37.8	13.6	4.2	4.2
2.2	41.5	15	4.6	4.4
2.3	45.4	16.3	5	4.6
2.4	49.4	17.8	5.5	4.8
2.5	53.6	19.3	6	5
2.6	58.1	20.9	6.5	5.2
2.7	62.6	22.6	7	5.4
2.8	67.4	24.3	7.5	5.6
2.9	72.3	26	8.1	5.8
3.0	77.3	27.9	8.6	6
3.1	82.6	29.8	9.2	6.2
3.2	88	31.7	9.8	6.6
3.3	93.6	33.7	10.4	7
3.4	99.3	35.8	11.1	7.4
3.5	105.2	37.9	11.7	7.9
3.6	111.3	40.1	12.4	8.3
3.7	117.6	42.4	13.1	8.8
3.8	124	44.7	13.8	9.3
3.9	130.7	47.1	14.6	9.8
4.0	137.4	49.5	15.3	10.3

3. Maintenance notes

• Check whether the maintenance area or the room area meet the requirement of the nameplate.

— It's only allowed to be operated in the rooms that meet the requirement of the nameplate.

• Check whether the maintenance area is well-ventilated.

— The continuous ventilation status should be kept during the operation process.

• Check whether there is fire source or potential fire source in the maintenance area.

— The naked flame is prohibited in the maintenance area; and the "no smoking" warning board should be hanged.

• Check whether the appliance mark is in good condition.

— Replace the vague or damaged warning mark.

4. Welding

• If you should cut or weld the refrigerant system pipes in the process of maintaining, please follow the steps as below:

a. Shut down the unit and cut power supply

b. Eliminate the refrigerant

c. Vacuuming

d. Clean it with N_2 gas

e. Cutting or welding

f. Carry back to the service spot for welding

• Make sure that there isnt any naked flame near the outlet of the vacuum pump and its well-ventilated.

• The refrigerant should be recycled into the specialized storage tank.

5. Filling the refrigerant

• Use the refrigerant filling appliances specialized for R32. Make sure that different kinds of refrigerant wont contaminate with each other.

• The refrigerant tank should be kept upright at the time of filling refrigerant.

• Stick the label on the system after filling is finished (or havent finished).

• Don't overfilling.

• After filling is finished, please do the leakage detection before test running; another time of leak detection should be done when its removed.

6. Safety instructions for transportation and storage

• Please use the flammable gas detector to check before unload and open the container.

• No fire source and smoking.

• According to the local rules and laws.

Specialist's Manual

• The following checks shall be applied to installations using flammable refrigerants:

— the charge size is in accordance with the room size within which the refrigerant containing parts are installed;

— the ventilation machinery and outlets are operating adequately and are not obstructed;

— if an indirect refrigerating circuit is being used, the secondary circuit shall be checked for the presence of refrigerant;

— marking to the equipment continues to be visible and legible. Markings and signs that are illegible shall be

corrected;

— refrigerating pipe or components are installed in a position where they are unlikely to be exposed to any substance which may corrode refrigerant containing components, unless the components are constructed of materials which are inherently resistant to being corroded or are suitably protected against being so corroded.

• Repair and maintenance to electrical components shall include initial safety checks and component inspection procedures. If a fault exists that could compromise safety, then no electrical supply shall be connected to the circuit until it is satisfactorily dealt with. If the fault cannot be corrected immediately but it is necessary to continue operation, an adequate temporary solution shall be used. This shall be reported to the owner of the equipment so all parties are advised.

• Initial safety checks shall include:

— that capacitors are discharged: this shall be done in a safe manner to avoid possibility of sparking;

— that no live electrical components and wiring are exposed while charging, recovering or purging the system;

— that there is continuity of earth bonding.

• Checks to the area

Prior to beginning work on systems containing flammable refrigerants, safety checks are necessary to ensure that the risk of ignition is minimised. For repair to the refrigerating system, DD.4.3 to DD.4.7 shall be completed prior to conducting work on the system.

• Work procedure

Work shall be undertaken under a controlled procedure so as to minimise the risk of a flammable gas or vapour being present while the work is being performed.

• General work area

All maintenance staff and others working in the local area shall be instructed on the nature of work being carried out. Work in confined spaces shall be avoided.

• Checking for presence of refrigerant

The area shall be checked with an appropriate refrigerant detector prior to and during work, to ensure the technician is aware of potentially toxic or flammable atmospheres. Ensure that the leak detection equipment being used is suitable for use with all applicable refrigerants, i.e. non-sparking, adequately sealed or intrinsically safe.

• Presence of fire extinguisher

If any hot work is to be conducted on the refrigerating equipment or any associated parts, appropriate fire extinguishing equipment shall be available to hand. Have a dry powder or CO_2 fire extinguisher adjacent to the charging area.

• No ignition sources

No person carrying out work in relation to a refrigerating system which involves exposing any pipe work shall use any sources of ignition in such a manner that it may lead to the risk of fire or explosion. All possible ignition sources, including cigarette smoking, should be kept sufficiently far away from the site of installation, repairing, removing and disposal, during which refrigerant can possibly be released to the surrounding space.

Prior to work taking place, the area around the equipment is to be surveyed to make sure that there are no flammable hazards or ignition risks. "No Smoking" signs shall be displayed.

• Ventilated area

Ensure that the area is in the open or that it is adequately ventilated before breaking into the system or conducting any hot work. A degree of ventilation shall continue during the period that the work is carried out. The ventilation should safely disperse any released refrigerant and preferably expel it externally into the atmosphere.

• Checks to the refrigerating equipment

Where electrical components are being changed, they shall be fit for the purpose and to the correct specification. At all times the manufacturer's maintenance and service guidelines shall be followed. If in doubt, consult the manufacturer's technical department for assistance.

The following checks shall be applied to installations using flammable refrigerants:

— the actual refrigerant charge is in accordance with the room size within which the refrigerant containing parts are installed;

— the ventilation machinery and outlets are operating adequately and are not obstructed;

— if an indirect refrigerating circuit is being used, the secondary circuit shall be checked for the presence of refrigerant;

— marking to the equipment continues to be visible and legible. Markings and signs that are illegible shall be corrected;

— refrigerating pipe or components are installed in a

position where they are unlikely to be exposed to any substance which may corrode refrigerant containing components, unless the components are constructed of materials which are inherently resistant to being corroded or are suitably protected against being so corroded.

• Checks to electrical devices

Repair and maintenance to electrical components shall include initial safety checks and component inspection procedures. If a fault exists that could compromise safety, then no electrical supply shall be connected to the circuit until it is satisfactorily dealt with. If the fault cannot be corrected immediately but it is necessary to continue operation, an adequate temporary solution shall be used. This shall be reported to the owner of the equipment so all parties are advised.

Initial safety checks shall include:

— that capacitors are discharged: this shall be done in a safe manner to avoid possibility of sparking;

— that no live electrical components and wiring are exposed while charging, recovering or purging the system;

— that there is continuity of earth bonding.

• Repairs to sealed components

During repairs to sealed components, all electrical supplies shall be disconnected from the equipment being worked upon prior to any removal of sealed covers, etc. If it is absolutely necessary to have an electrical supply to equipment during servicing, then a permanently operating form of leak detection shall be located at the most critical point to warn of a potentially hazardous situation.

Particular attention shall be paid to the following to ensure that by working on electrical components, the casing is not altered in such a way that the level of protection is affected. This shall include damage to cables, excessive number of connections, terminals not made to original specification, damage to seals, incorrect fitting of glands, etc.

— Ensure that the apparatus is mounted securely.

— Ensure that seals or sealing materials have not degraded to the point that they no longer serve the purpose of preventing the ingress of flammable atmospheres. Replacement parts shall be in accordance with the manufacturer's specifications.

NOTE: The use of silicon sealant can inhibit the effectiveness of some types of leak detection equipment. Intrinsically safe components do not have to be isolated prior to working on them.

• Repair to intrinsically safe components

Do not apply any permanent inductive or capacitance loads to the circuit without ensuring that this will not exceed the permissible voltage and current permitted for the equipment in use.

Intrinsically safe components are the only types that can be worked on while live in the presence of a flammable atmosphere. The test apparatus shall be at the correct rating.

Replace components only with parts specified by the manufacturer. Other parts may result in the ignition of refrigerant in the atmosphere from a leak.

• Cabling

Check that cabling will not be subject to wear, corrosion, excessive pressure, vibration, sharp edges or any other adverse environmental effects. The check shall also take into account the effects of aging or continual vibration from sources such as compressors or fans.

• Detection of flammable refrigerants

Under no circumstances shall potential sources of ignition be used in the searching for or detection of refrigerant leaks. A halide torch (or any other detector using a naked flame) shall not be used.

• Leak detection methods

The following leak detection methods are deemed acceptable for all refrigerant systems.

Electronic leak detectors may be used to detect refrigerant leaks but, in the case of flammable refrigerants, the sensitivity may not be adequate, or may need recalibration. (Detection equipment shall be calibrated in a refrigerant-free area.) Ensure that the detector is not a potential source of ignition and is suitable for the refrigerant used. Leak detection equipment shall be set at a percentage of the LFL of the refrigerant and shall be calibrated to the refrigerant employed, and the appropriate percentage of gas (25% maximum) is confirmed.

Leak detection fluids are also suitable for use with most refrigerants but the use of detergents containing chlorine shall be avoided as the chlorine may react with the refrigerant and corrode the copper pipe-work.

If a leak is suspected, all naked flames shall be removed/ extinguished.

If a leakage of refrigerant is found which requires brazing, all of the refrigerant shall be recovered from the system, or isolated (by means of shut off valves) in a part of the system remote from the leak. For appliances containing flammable

refrigerants, oxygen free nitrogen (OFN) shall then be purged through the system both before and during the brazing process.

• Removal and evacuation

When breaking into the refrigerant circuit to make repairs — or for any other purpose — conventional procedures shall be used. However, for flammable refrigerants it is important that best practice is followed since flammability is a consideration. The following procedure shall be adhered to:

- remove refrigerant;
- purge the circuit with inert gas;
- evacuate;
- purge with inert gas;
- open the circuit by cutting or brazing.

The refrigerant charge shall be recovered into the correct recovery cylinders. For appliances containing flammable refrigerants, the system shall be "flushed" with OFN to render the unit safe. This process may need to be repeated several times. Compressed air or oxygen shall not be used for purging refrigerant systems.

For appliances containing flammable refrigerants, flushing shall be achieved by breaking the vacuum in the system with OFN and continuing to fill until the working pressure is achieved, then venting to atmosphere, and finally pulling down to a vacuum. This process shall be repeated until no refrigerant is within the system. When the final OFN charge is used, the system shall be vented down to atmospheric pressure to enable work to take place. This operation is absolutely vital if brazing operations on the pipe-work are to take place.

Ensure that the outlet for the vacuum pump is not close to any ignition sources and that ventilation is available.

• Charging procedures

In addition to conventional charging procedures, the following requirements shall be followed.

- Ensure that contamination of different refrigerants does not occur when using charging equipment. Hoses or lines shall be as short as possible to minimise the amount of refrigerant contained in them.
- Cylinders shall be kept in an appropriate position according to the instructions.
- Ensure that the refrigerating system is earthed prior to charging the system with refrigerant.
- Label the system when charging is complete (if not already).
- Extreme care shall be taken not to overfill the refrigerating system.

Prior to recharging the system, it shall be pressure-tested with the appropriate purging gas. The system shall be leak-tested on completion of charging but prior to commissioning. A follow up leak test shall be carried out prior to leaving the site.

• Decommissioning

Before carrying out this procedure, it is essential that the technician is completely familiar with the equipment and all its detail. It is recommended good practice that all refrigerants are recovered safely. Prior to the task being carried out, an oil and refrigerant sample shall be taken in case analysis is required prior to re-use of recovered refrigerant. It is essential that electrical power is available before the task is commenced.

a) Become familiar with the equipment and its operation.

b) Isolate system electrically.

c) Before attempting the procedure, ensure that:

— mechanical handling equipment is available, if required, for handling refrigerant cylinders;

— all personal protective equipment is available and being used correctly;

— the recovery process is supervised at all times by a competent person;

— recovery equipment and cylinders conform to the appropriate standards.

d) Pump down refrigerant system, if possible.

e) If a vacuum is not possible, make a manifold so that refrigerant can be removed from various parts of the system.

f) Make sure that cylinder is situated on the scales before recovery takes place.

g) Start the recovery machine and operate in accordance with manufacturer's instructions.

h) Do not overfill cylinders. (No more than 80% volume liquid charge).

i) Do not exceed the maximum working pressure of the cylinder, even temporarily.

j) When the cylinders have been filled correctly and the process completed, make sure that the cylinders and the equipment are removed from site promptly and all isolation

valves on the equipment are closed off.

k) Recovered refrigerant shall not be charged into another refrigerating system unless it has been cleaned and checked.

• Labelling

Equipment shall be labelled stating that it has been de-commissioned and emptied of refrigerant. The label shall be dated and signed. For appliances containing flammable refrigerants, ensure that there are labels on the equipment stating the equipment contains flammable refrigerant.

• Recovery

When removing refrigerant from a system, either for servicing or decommissioning, it is recommended good practice that all refrigerants are removed safely.

When transferring refrigerant into cylinders, ensure that only appropriate refrigerant recovery cylinders are employed. Ensure that the correct number of cylinders for holding the total system charge is available. All cylinders to be used are designated for the recovered refrigerant and labelled for that refrigerant (i.e. special cylinders for the recovery of refrigerant). Cylinders shall be complete with pressure-relief valve and associated shut-off valves in good working order. Empty recovery cylinders are evacuated and, if possible, cooled before recovery occurs.

The recovery equipment shall be in good working order with a set of instructions concerning the equipment that is at hand and shall be suitable for the recovery of all appropriate refrigerants including, when applicable, flammable refrigerants. In addition, a set of calibrated weighing scales shall be available and in good working order. Hoses shall be complete with leak-free disconnect couplings and in good condition. Before using the recovery machine, check that it is in satisfactory working order, has been properly maintained and that any associated electrical components are sealed to prevent ignition in the event of a refrigerant release. Consult manufacturer if in doubt.

The recovered refrigerant shall be returned to the refrigerant supplier in the correct recovery cylinder, and the relevant waste transfer note arranged. Do not mix refrigerants in recovery units and especially not in cylinders.

If compressors or compressor oils are to be removed, ensure that they have been evacuated to an acceptable level to make certain that flammable refrigerant does not remain within the lubricant. The evacuation process shall be carried out prior to returning the compressor to the suppliers. Only electric heating to the compressor body shall be employed to accelerate this process. When oil is drained from a system, it shall be carried out safely.

• General

That the installation of pipe-work shall be kept to a minimum.

That compliance with national gas regulations shall be observed.

That mechanical connections made in accordance with 22.118 shall be accessible for maintenance purposes.

Main Tools for Installation and Maintenance



Level meter



Measuring tape



Screw driver



Impact drill



Drill head



Electric drill



Electroprobe



Universal meter



Torque wrench



Open-end wrench



Inner hexagon spanner



Electronic leakage detector



Vacuum pump



Pressure meter



Pipe pliers



Pipe pliers



Pipe cutter



Pipe expander



Pipe bender



Soldering appliance



Refrigerant container



Electronic scale

8. Installation

Installation Procedures

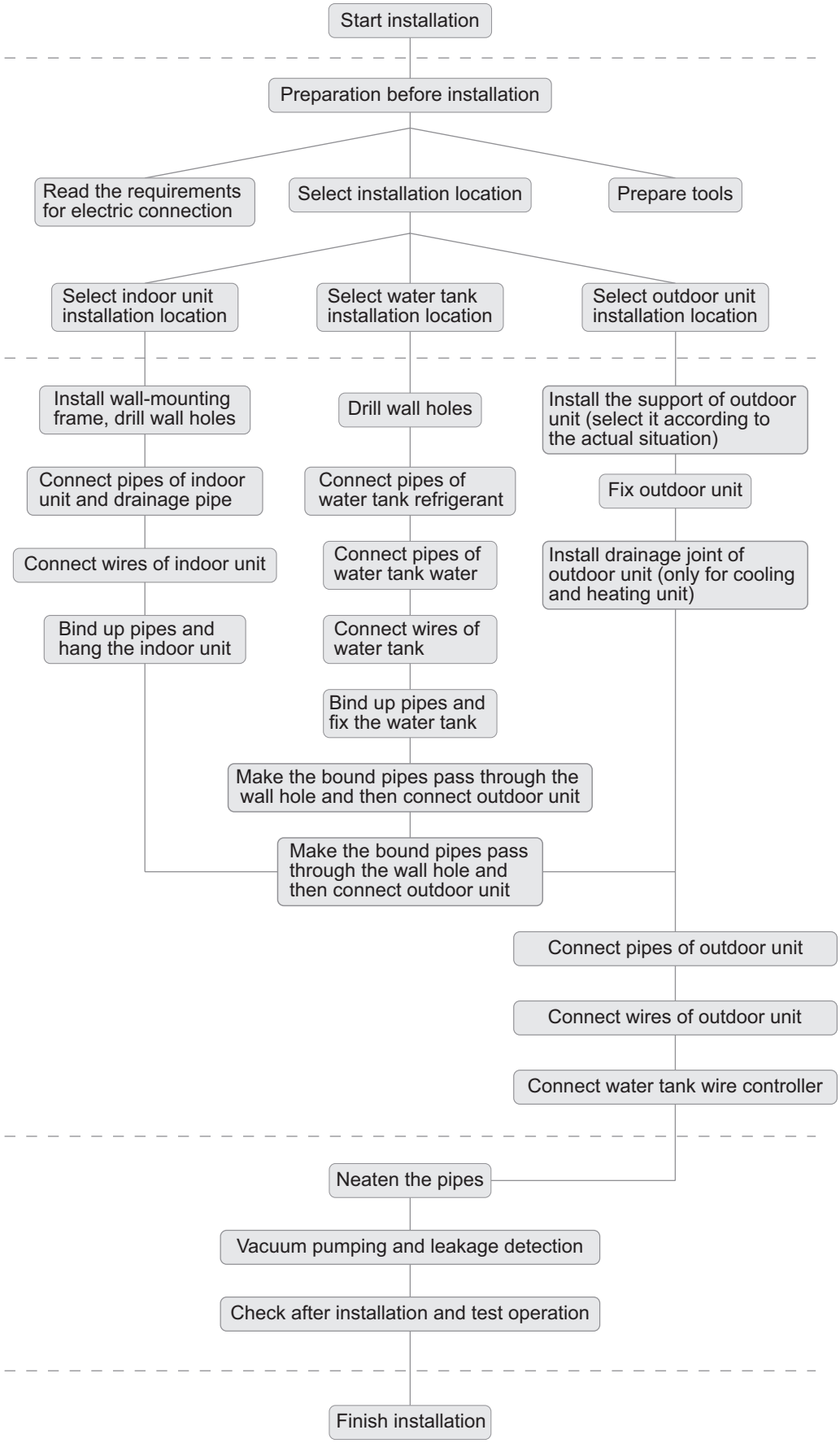

Note: this flow is only for reference; please find the more detailed installation steps in this section.

8.1 Combinations of Indoor and Outdoor Units

See below the number of indoor units that can be connected to one outdoor unit.

Model	Sets of connectable indoor units		Applicable water tank	Function
	Connecting water tank	Non-connected water tank		
MV-E36BIDHW	1~3	2~3	MV-200WT	Air conditioning + Water heating
MV-E42BIDHW	1~4	2~4		

Note: When the water tank is connected, at least one indoor unit needs to be connected.

8.2 Electrical Connections

1. Remove the handle at the right side plate of the outdoor unit (one screw).
2. Remove the cable clamp, connect the power connection cable with the terminal at the row of connection and fix the connection. The fitting line distributing must be consistent with the indoor unit. terminal of line bank. Wiring should meet that of indoor unit.
3. Fix power connection wire by wire clamp.
4. Ensure wire has been fixed well.
5. Install the handle.

⚠ Including an air switch with suitable capacity,please note the following table. Air switch should be included magnet buckle and heating buckle function, it can protect the circuit-short and overload. (Caution: please do not use the fuse only for protect the circuit)

Air-conditioner	Air switch capacity
MV-E36BIDHW MV-E42BIDHW	40A

⚠ An all-pole disconnection switch having a contact separation of at least 3mm in all pole should be connected in fixed wiring.

⚠ Wrong wire connection may cause malfunction of some electric components. After fixing cable, ensure that leads between connection to fixed point have some space.

⚠ For 36K, the connection pipes and the connectiong wirings of the unit A (water tank), unit B, unit C, unit D must be corresponding to each other respective.

⚠ For 42K, the connection pipes and the connectiong wirings of the unit A (water tank), unit B, unit C, unit D, unit E must be corresponding to each other respective.

⚠ The appliance shall be installed in accordance with national wiring regulations.

Note: the above figures are only intended to be a simple diagram of the appliance and may not correspond to the appearance of the units that have been purchased.

36K

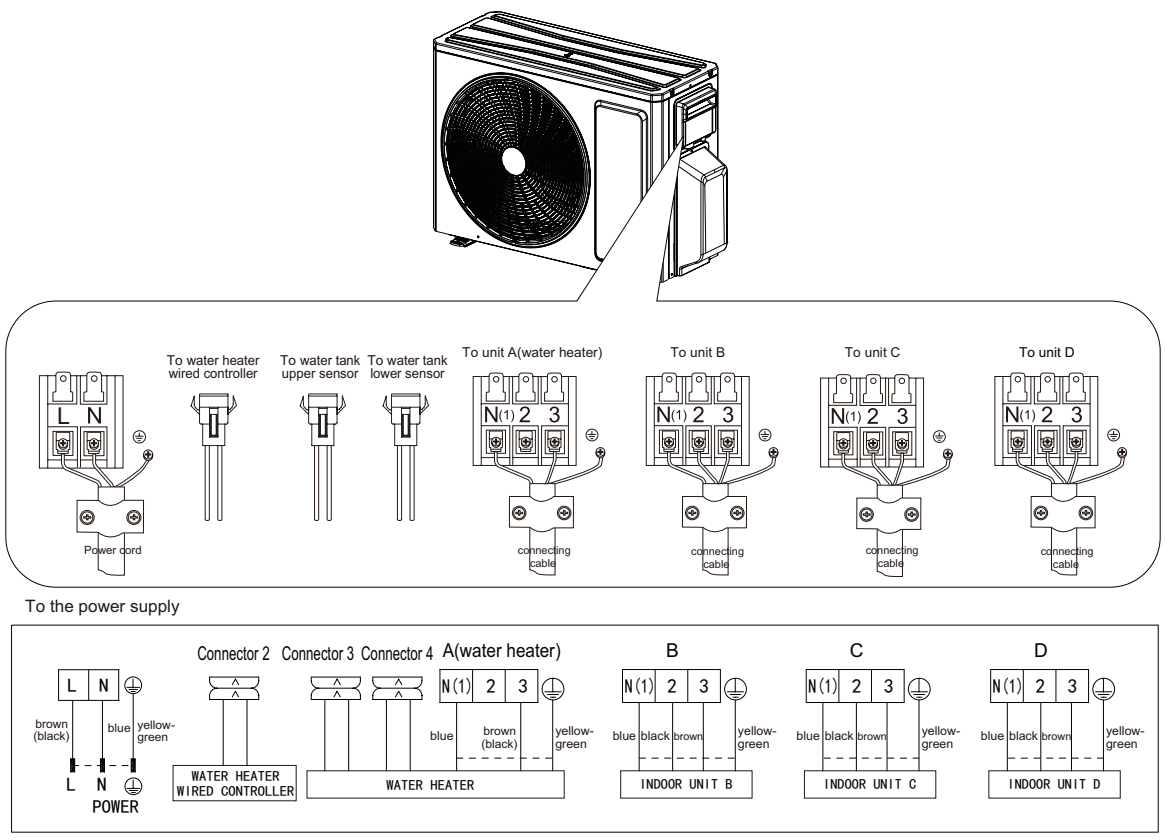

42K

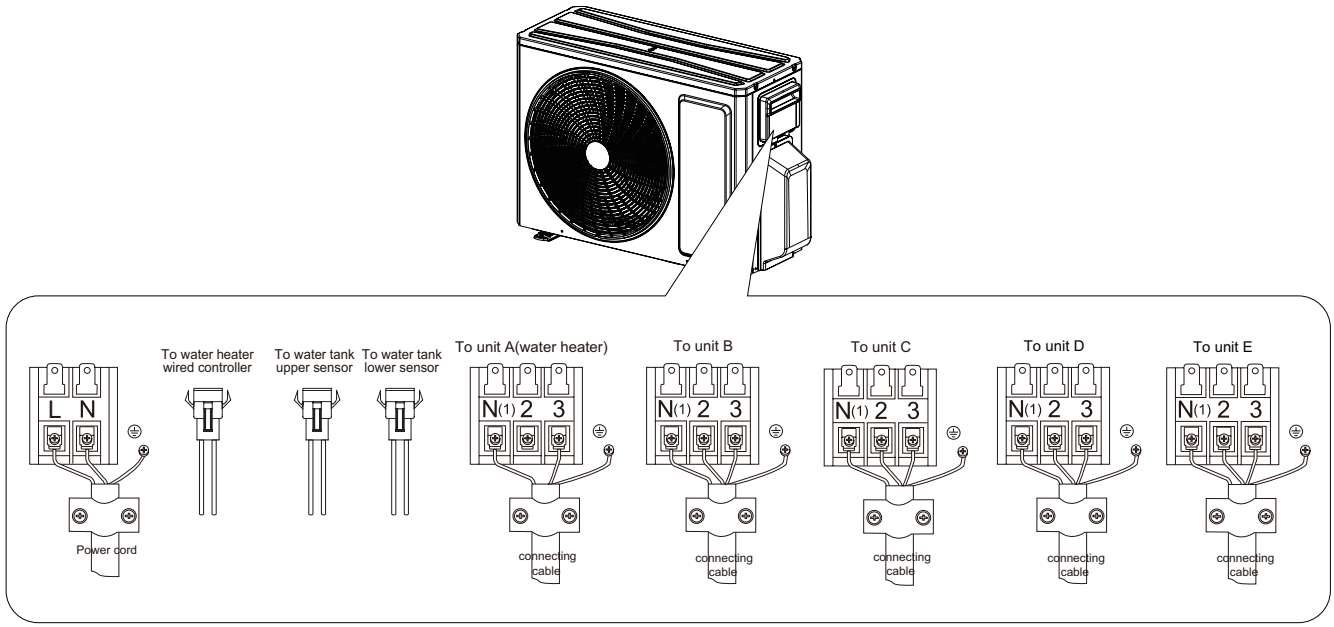

To the power supply

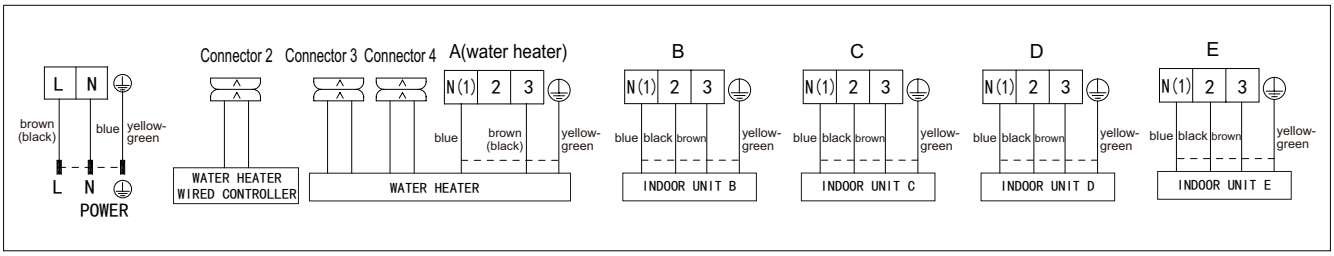

8.3 Installation of Outdoor Unit

Location

⚠ Use bolts to secure the unit to a flat, solid floor. When mounting the unit on a wall or the roof, make sure the support is firmly secured so that it cannot move in the event of intense vibrations or a strong wind.

⚠ Do not install the outdoor unit in pits or air vents.

Installing the pipes

⚠ Use suitable connecting pipes and equipment for the refrigerant R32.

Models(m)	MV-E36BIDHW	MV-E42BIDHW
Max. connection pipe length	80	100
Max. connection pipe length (Simple one indoor unit or water tank)	25	25
Max. connection pipe height distance (indoor and outdoor)	25	25
Max. connection pipe height distance (water tank and outdoor)	10	10

The sum of the capacity codes of the indoor units should be among 50%-150% of that of the outdoor unit.

Capacity ratio is calculated as follows:

Sum of the capacity codes of the indoor units =
Water tank Capacity Code + Indoor unit 1 Capacity Code + Indoor unit 2 Capacity Code + Indoor unit 3 Capacity Code + Indoor unit 4 Capacity Code.

The table below for capacity codes of the outdoor unit.

Outdoor unit	Capacity code
36K	100
42K	120

The table below for the relationship between the capacity code of the water tank and single indoor unit and the size code of the indoor unit shell.

Water tank or Indoor unit shell size code	Capacity code
200L Water tank	35
A	20
B	25
C	35
D	50
E	70

⚠ The refrigerant pipes must not exceed the maximum heights 25m.

⚠ Wrap all the refrigerant pipes and joints.

⚠ Tighten the connections using two wrenches working in opposite directions.

Caution: Installation Must be Performed in Accordance with the NEC/CEC by Authorized Personnel Only.

Install the drain fitting and the drain hose (for model with heat pump only)

Condensation is produced and flows from the outdoor unit when the appliance is operating in the heating mode. In order not to disturb neighbours and to respect the environment, install a drain fitting and a drain hose to channel the condensate water. Install the drain fitting and rubber washer on the outdoor unit chassis and connect a drain hose to it as shown in the figure.

NOTE: As for the shape of drainage joint, please refer to the current product. Do not install the drainage joint in the severe cold area. Otherwise, it will be frosted and then cause malfunction.

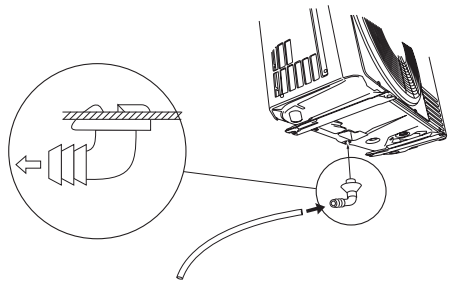

8.4 Pipe Connection of Indoor Unit and Outdoor Unit

Pipe connection of indoor unit

(1) Remove pipe cover and pipe plug.

(2) Direct the flare part of copper pipe to the center of screwed joint. Twist on the flare nut tightly by hand, as in Fig. a. (Make sure indoor pipe is correctly connected. Improper location of the center will prevent flare nut from being securely twisted. Thread of nut will get damaged if the flare nut is twisted forcibly.)

(3) Use torque wrench to twist on the flare nut tightly until the wrench gives out a click sound. (Hold the handle of wrench and make it at right angle to the pipe, as in Fig. b.)

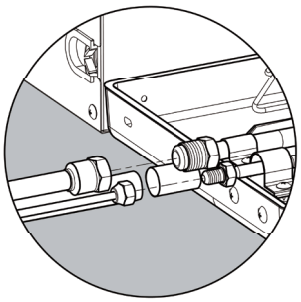

Fig. a

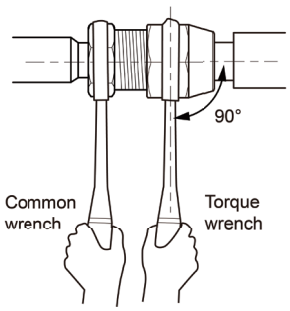

Fig. b

(4) Use sponge to wrap the un-insulated connection pipe and joint. Then tie the sponge tightly with plastic tape.

(5) Connection pipe should be supported by a bearer rather than the unit.

(6) The bending angle of connection pipe should not be too small; otherwise the pipe might be cracked.

(7) Please use a pipe bender to bend the pipe.

When connecting indoor unit with connection pipe, do not pull the big and small joints of indoor unit with force in case the capillary tube or other tubes be cracked and cause leakage.

(8) Regardless of the size of the indoor unit or water tank liquid pipe, the pipe of indoor unit or water tank and outdoor unit liquid pipe is 1/4 inch. If the liquid pipe joint for indoor unit or water tank is not match it, then it is necessary to add the pipe joint adapter as Fig. c;

Regardless of the size of the indoor unit or water tank gas pipe, the pipe of indoor unit or water tank and outdoor unit gas pipe is 3/8 inch. If the gas pipe joint for indoor unit or water tank is not match it, then it is necessary to add one or more pipe joint adapter as Fig. c.

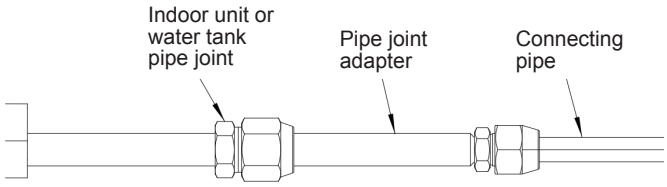

Fig. c

Pipe connection of outdoor unit

(1) Twist the flare nut on the connection pipe of outdoor valves. Twisting method is the same as for indoor pipe connection.

(2) During engineering installation, the connection pipe inside the unit must be wrapped by insulation sleeve.

(3) According to the following schematic diagram of pipeline connection, install the outlet pipe from the rear.

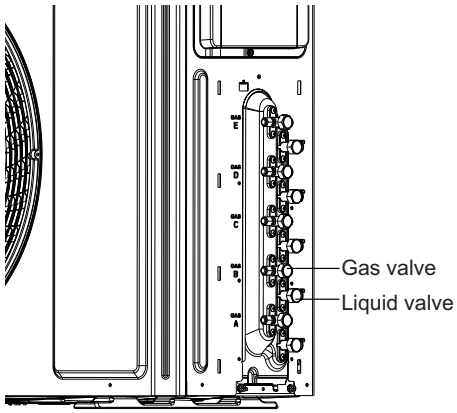

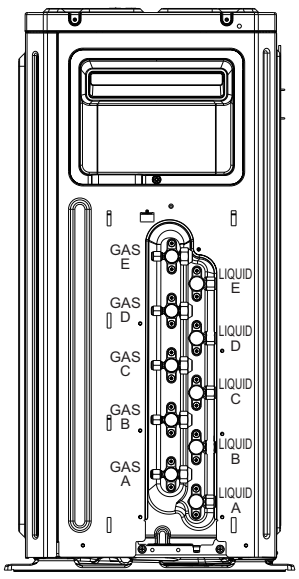

Fig. d

NOTICE: The indoor unit must be connected to the B,C,D,E position of the outdoor unit (as show in Fig. d).

8.5 Pipe Connection of Water Tank

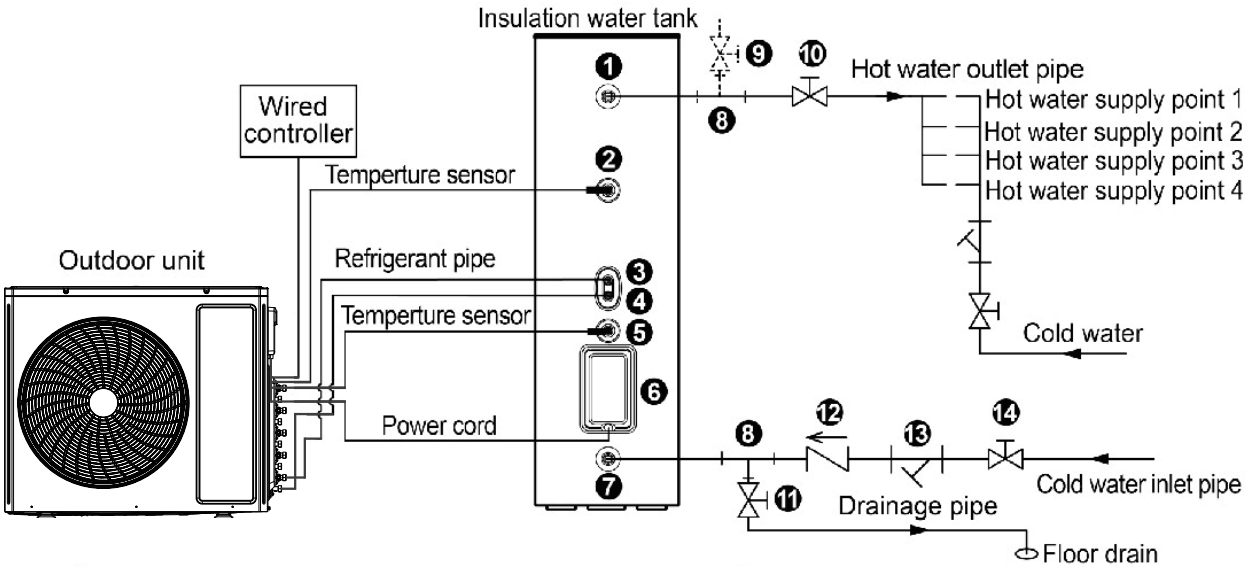

❶ Hot water outlet	❷ Temperature sensor 1
❸ Refrigerant in	❹ Refrigerant out
❺ Temperature sensor 2	❻ Exectric box
❼ Cold water inlet/drainage outlet	❽ Three-way valve
❾ Cut-off valve (for exhausting air)	❿ Cut-off valve A
⓫ Cut-off valve (for draining water)	⓬ Safety valve
⓭ Filter	⓮ Cut-off valve B

NOTICE:

(1) The water tank must be connected to the A position of the outdoor unit (as show in Fig. d).

(2) The water tank installation instructions refer to the water tank manual.

(3) When electrical connections are made, line controlrs and temperate lines need to be separated from the heating line by more than 20cm.

8.6 Bleeding

Humid air left inside the refrigerant circuit can cause compressor malfunction. After having connected the indoor and outdoor units, bleed the air and humidity from the refrigerant circuit using a vacuum pump.

(1) Unscrew and remove the caps from the 2-way and 3-way valves.

(2) Unscrew and remove the cap from the service valve.

(3) Connect the vacuum pump hose to the service valve.

(4) Operate the vacuum pump for 10-15 minutes until an absolute vacuum of 10 mm Hg has been reached.

(5) With the vacuum pump still in operation, close the low-pressure knob on the vacuum pump coupling. Stop the vacuum pump.

(6) Open the 2-way valve by 1/4 turn and then close it after 10 seconds. Check all the joints for leaks using liquid soap or an electronic leak device.

(7) Turn the body of the 2-way and 3-way valves. Disconnect the vacuum pump hose.

(8) Replace and tighten all the caps on the valves.

Piping size (inch)	Twisting moment (N·m)
Φ1/4	15-20
Φ3/8	35-40
Φ1/2	45-50
Φ5/8	60-65
Φ3/4	70-75

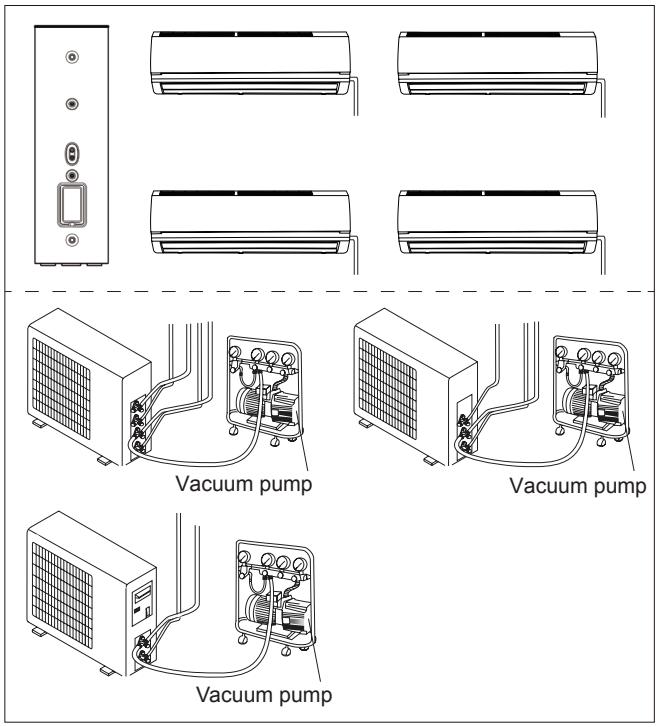

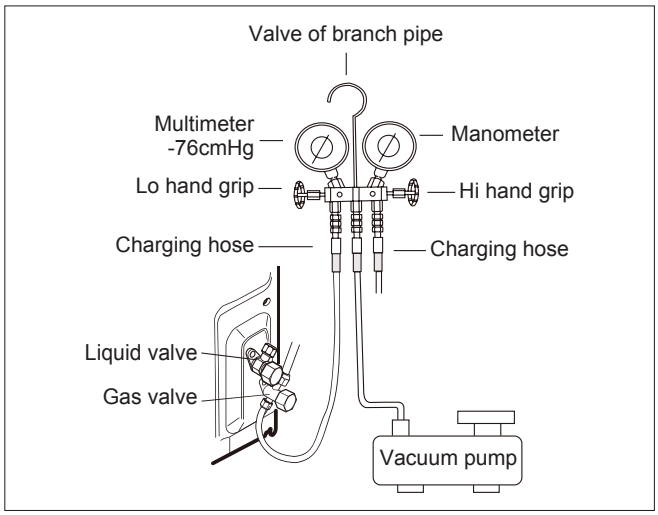

8.7 Maintenance

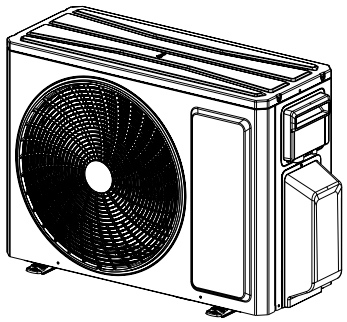

⚠ Use suitable instruments for the refrigerant R32.

⚠ Do not use any other refrigerant than R32.

⚠ Do not use mineral oils to clean the unit.

8.8 Installation Dimension Diagram

⚠ The installation must be done by trained and qualified service personnel with reliability according to this manual.

⚠ Contact service center before installation to avoid the malfunction due to unprofessional installation.

⚠ When picking up and moving the units, you must be guidedby trained and qualified person.

⚠ Ensure that the recommende dspace is left around the appliance.

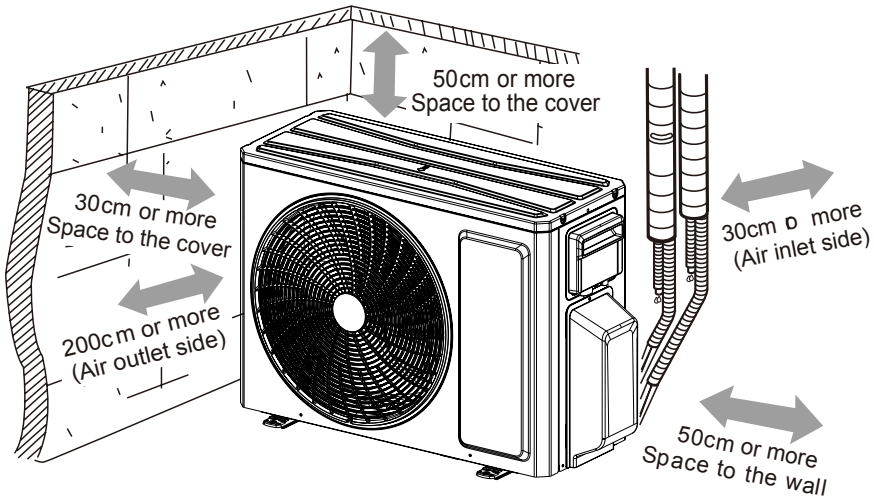

Fix the support of outdoor unit (select it according to the actual installation situation)

1. Select installation location according to the house structure.

2. Fix the support of outdoor unit on the selected location with expansion screws.

NOTICE:

(1) Take sufficient protective measures when installing the outdoor unit.

(2) Make sure the support can withstand at least four times of the unit weight.

(3) The outdoor unit should be installed at least 3cm above the floor in order to install drain joint. (for the model with heating tube, the installation height should be no less than 20cm.)

(4) For the unit with cooling capacity of 10000W~16000W, 10 expansion screws are needed.

(5) As for the shape of drainage joint, please refer to the current product. Do not install the drainage joint in the severe cold area. Otherwise, it will be frosted and then cause malfunction.

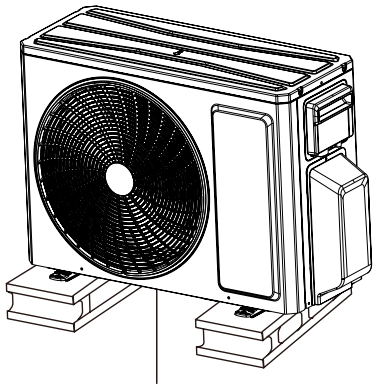

8.9 Check after Installation

Check Items	Problems Owing to Improper Installation
Is the installation reliable?	The unit may drop, vibrate or make noises
Has the gas leakage been checked?	May cause unsatisfactory cooling (heating) effect
Is the thermal insulation of the unit sufficient?	May cause condensation and water dropping
Is the drainage smooth?	May cause condensation and water dropping
Does the power supply voltage accord with the rated voltage specified on the nameplate?	The unit may bread down or the components may be burned out
Are the lines and pipelines correctly installed?	The unit may bread down or the components may be burned out
Has the unit been safely grounded?	Risk of electrical leakage
Are the models of lines in conformity with requirements?	The unit may bread down or the components may be burned out
Are there any obstacles near the air inlet and outlet of the indoor and outdoor units?	The unit may bread down or the components may be burned out
Have the length of refrigerating pipe and refrigerant charge amount been recorded?	It is not easy to decide the charge amount of refrigerant.

9. Maintenance

9.1 Error Code List

Display method of indoor unit (Error code)	Malfunction name	AC status	Possible causes
b5	Liquid valve temperature sensor is ON / short-circuited		1. Temperature sensor is not well connected or damaged; 2. The wire of temperature sensor is damaged, causing short circuit to copper pipe or outer casing; 3. Main board of outdoor unit is damaged.
b7	Gas valve temperature sensor is ON / short-circuited		1. Temperature sensor is not well connected or damaged; 2. The wire of temperature sensor is damaged, causing short circuit to copper pipe or outer casing; 3. Main board of outdoor unit is damaged.
E1	High pressure protection of system	Cool/Dry: all loads stops operation except indoor fan; Heat: all loads stops operation.	1. Heat exchange of outdoor unit is too dirty, or it blocked the air inlet/outlet; 2. Is power voltage normal; (three-phase unit) 3. Ambient temperature is too high; 4. Wiring of high pressure switch is loose or high pressure switch is damaged; 5. The internal system is blocked; (dirt blockage, ice blockage, oil blockage, angle valve is not completely opened) 6. Main board of outdoor unit is damaged; 7. Refrigerant is too much.
E4	High discharge temperature protection of compressor	Cool/Dry: compressor and outdoor fan stops operation, while indoor fan operates; Heat: all loads stops operation.	See “Overload protection of compressor, high discharge temperature protection of compressor” Fixed speed unit: 1. System abnormality; (e.g.: blockage) 2. Rotate speed of outdoor motor is abnormal; (cooling) 3. Outdoor air inlet is abnormal; (cooling) 4. System is normal, but the resistance of compressor exhausting temperature sensor is abnormal or poorly connected.
E5	AC overcurrent protection	Cool/Dry: compressor and outdoor fan stops operation, while indoor fan operates; Heat: all loads stops operation.	1. Power voltage is unstable; 2. Power voltage is too low; 3. System load is too high, which leads to high current; 4. Heat exchange of indoor unit is too dirty, or it blocked the air inlet/outlet; 5. Fan motor operation is abnormal; the fan speed is too low or not functioning; 6. Compressor is blocked; 7. The internal system is blocked; (dirt blockage, ice blockage, oil blockage, angle valve is not completely opened) 8. Main board of outdoor unit is damaged. See “AC overcurrent protection”

Display method of indoor unit (Error code)	Malfunction name	AC status	Possible causes
E6	Communication malfunction between indoor unit and outdoor unit	Cool: compressor stops operation, while indoor fan operates; Heat: all loads stops operation.	See "Communication malfunction"
E8	High temperature prevention protection	Cool: compressor stops operation while indoor fan operates; Heat: all loads stops operation.	See “High temperature prevention protection; high power; system isabnormal”
EE	Malfunction of EEPROM	Cool/Dry: compressor stops operation, while indoor fan operates; Heat: all loads stops operation.	Main board of outdoor unit is damaged.
F3	Outdoor ambient temperature is open/short-circuited	Cool/Dry: compressor and outdoor fan stop operation, while indoor fan operates; Heat: all loads stops operation.	1. Temperature sensor is not connected well or damaged; 2. Temperature sensor wire of outdoor unit is damaged; short circuit between the temperature sensor and copper pipe or outer case 3. Main board of outdoor unit is damaged;
F4	Outdoor condenser temperature sensor is open/ short-circuited	Cool/Dry: compressor and outdoor fan stop operation, while indoor fan operates; Heat: after operating for 3mins, all loads stops operation.	1. Temperature sensor is not connected well or damaged; 2. Temperature sensor wire of outdoor unit is damaged; short circuit between the temperature sensor and copper pipe or outer case; 3. Main board of outdoor unit is damaged.
F5	Outdoor air discharge temperature is open/short-circuited	Complete unit stops operation; motor of sliding door is cut off power.	1. The exhaust temperature sensor is not connected well or damaged. 2. Temperature sensor wire of outdoor unit is damaged; short circuit between the temperature sensor and copper pipe or outer case 3. Main board of outdoor unit is damaged;
FE	Malfunction of water tank upper sensor		Water tank temperature sensor hasn't been connected well or is damaged. Please check it by referring to the resistance table for temperature sensor.
FL	Malfunction of water tank lower sensor		Water tank temperature sensor hasn't been connected well or is damaged. Please check it by referring to the resistance table for temperature sensor.

Display method of indoor unit (Error code)	Malfunction name	AC status	Possible causes
H3	Overload protection of compressor	Cool/Dry: compressor stops operation, while indoor fan operates. Heat: all loads stops operation.	1. Overload wire of compressor is loose; 2. The overload protector is damaged. Under normal circumstances, the resistance between both ends of terminal is less than 1ohm. 3. See “Overload protection of compressor , High discharge temperature protection of compressor”
H5	IPM protection	Cool/Dry: compressor stops operation, while indoor fan operates. Heat: all loads stops operation.	See “IPM protection, over-phase current of compressor”
H7	Desynchronizing of compressor	Cool/Dry: compressor stops operation, while indoor fan operates; Heat: all loads stops operation.	See “Desynchronization diagnosis for compressor”
HC	PFC protection	Cool/Dry: compressor stops operation, while indoor fan operates; Heat: all loads stops operation.	1. The power grid quality is bad; AC input voltage fluctuates sharply; 2. Power plug of air conditioner or wiring board or reactor is not connected reliably; 3. Indoor and outdoor heat exchanger is too dirty, or air inlet/ outlet is blocked; 4. Main board of outdoor unit is damaged.
L3	Malfunction of outdoor fan/ malfunction of DC motor	Cool/Dry: all loads stops operation except indoor fan. Heat: all loads stops operation.	1. Outdoor condenser, air inlet and air outlet are blocked by filth or dirt; 2. Fan is blocked or loosened; 3. Motor or connection wire of motor is damaged; 4. Main board of outdoor unit is damaged; (As for dual-outdoor fan, L3 indicates fan 1; LA indicates fan 2)
L6	Insufficient unit capacity		1. Any malfunction that causes the compressor to stop? 2. Does the water heater reach the temperature point and stop the heat pump? 3. Does the electrical heating of wire controller set to 0? 4. Does the wire controller set up energy efficiency mode?
Lc	Start-up failed	Cool/Dry: compressor stops, while indoor fan operates; Heat: all loads stops operation.	See “Malfunction diagnosis for failure startup”

Display method of indoor unit (Error code)	Malfunction name	AC status	Possible causes
P5	Over-phase current protection of compressor	Cool/Dry: compressor stops operation, while indoor fan operates; Heat: all loads stops operation.	See “Overload protection of compressor , High discharge temperature protection of compressor”
PH	DC bus voltage is too high	Cool/Dry: compressor stops operation, while indoor fan operates; Heat: all loads stops operation.	1. Measure the voltage between position L and position N on the wiring board (XT). If it’s higher than 265 VAC, please turn on the unit until the power voltage is decreased to the normal range; 2. If the AC input is normal, please replace the outdoor control board.
PL	DC bus voltage is too low	Cool/Dry: compressor stops operation, while indoor fan operates; Heat: all loads stops operation.	1. Measure the voltage between position L and position N on the wiring board (XT). If it’s lower than 150 VAC, please turn on the unit until the power voltage is increased to the normal range; 2. If the AC input is normal, please replace the outdoor control board.
PU	Charging malfunction of capacitor	Cool/Dry: compressor stops operation, while indoor fan operates; Heat: all loads stops operation.	See “Charging malfunction of capacitor”
U1	Malfunction of phase current detection circuit for compressor	Cool: compressor and outdoor fan stops operation, while indoor fan operates; Heat: compressor, outdoor fan and indoor fan stops operation.	The control board is damaged

9.2 Procedure of Troubleshooting

1. Overload protection of compressor H3, high discharge temperature protection of compressor E4

Main check points:

(1) electronic expansion valve (2) expansion valve terminal

(3) charging amount of refrigerant (4) overload protector

NOTE: The control board as below means the control board of outdoor unit.

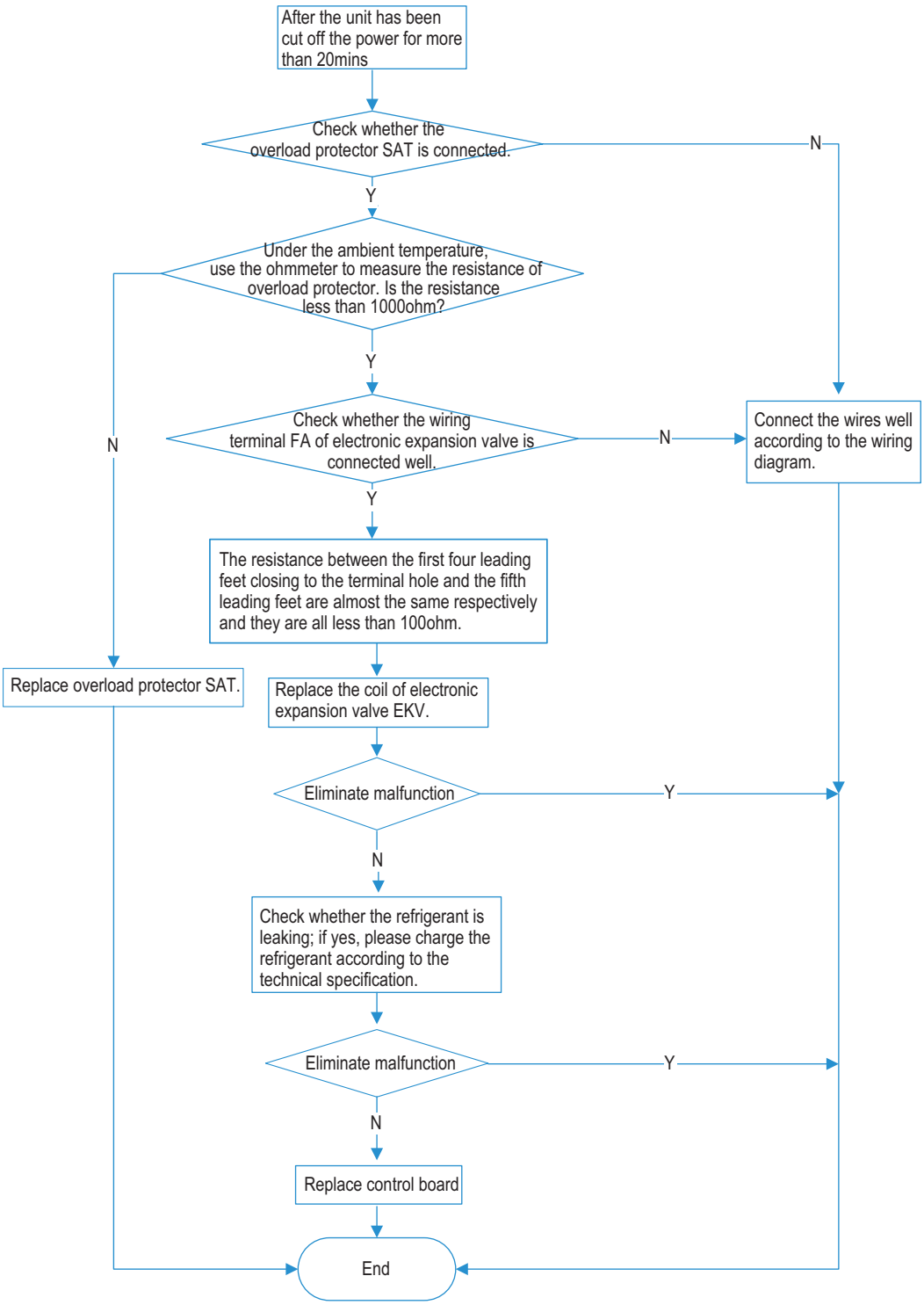

2. AC overcurrent protection E5

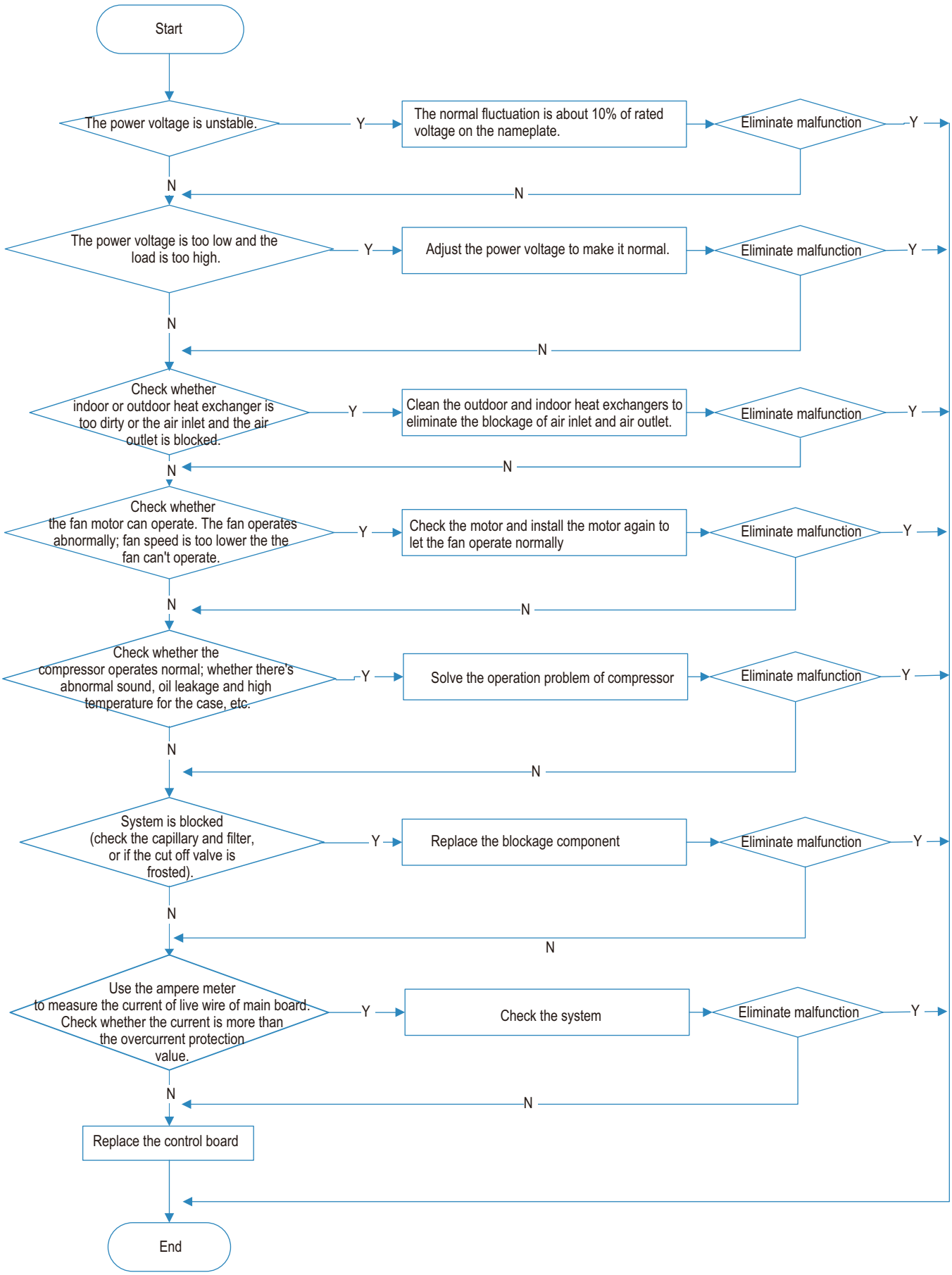

3. Communication malfunction E6

3.1 Communication error of indoor and outdoor unit

Main check points:

(1) Connection wire between indoor unit and outdoor unit

(2) Wiring inside the unit

(3) Communication circuit of control board of indoor unit

(4) Communication circuit of control board of outdoor unit

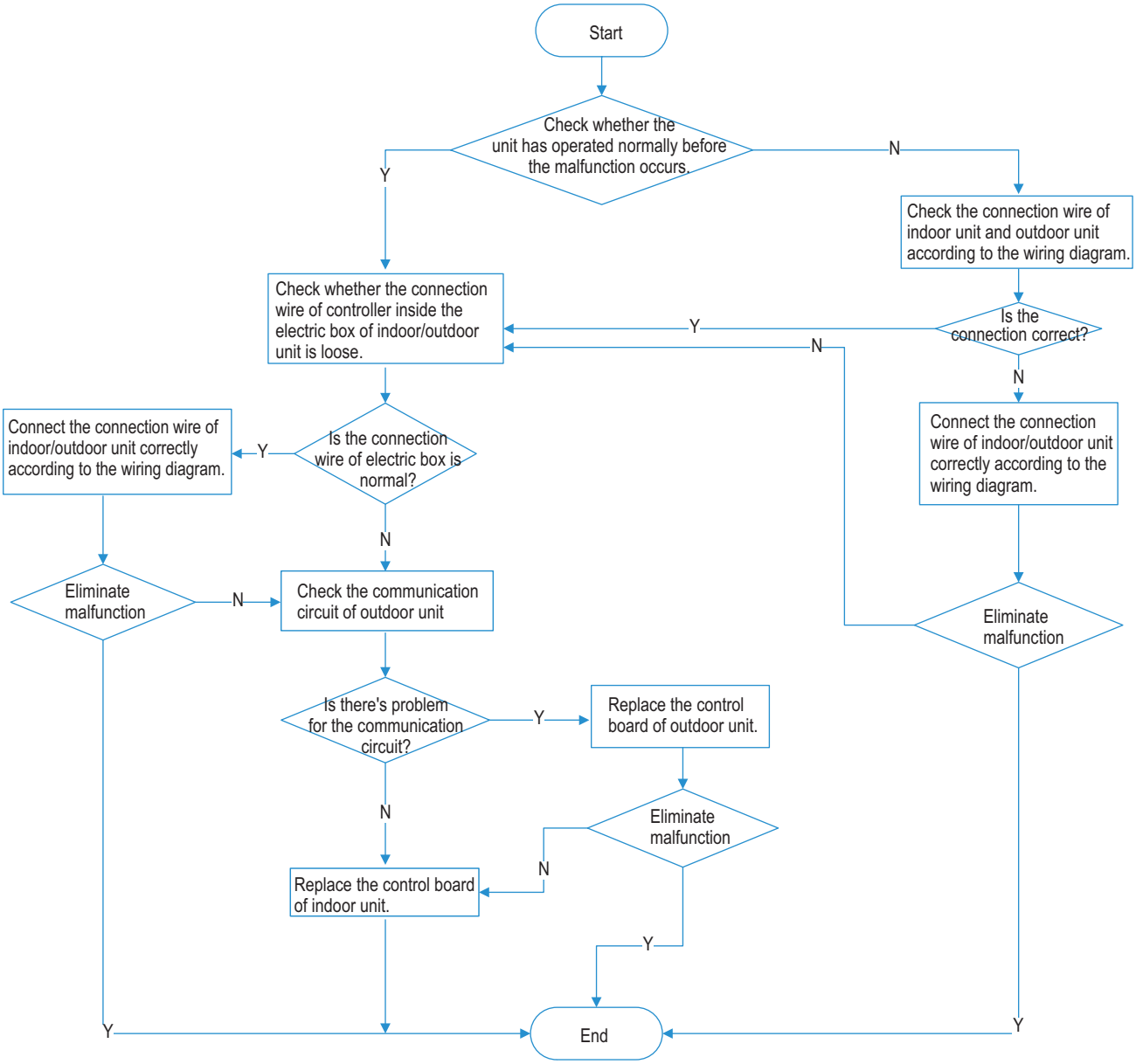

Note: Method for checking the communication circuit of inverter split type and floor standing unit: cut off the communication wires of indoor/outdoor unit, and then measure the voltage between COM and N of the control board of outdoor unit (DC notch, about 56V)

3.2 Communication error between wired controller and indoor unit

Main check points:

(1) Connection wire of wired controller

(2) Wiring terminal

(3) Wired controller

(4) Main board of indoor unit

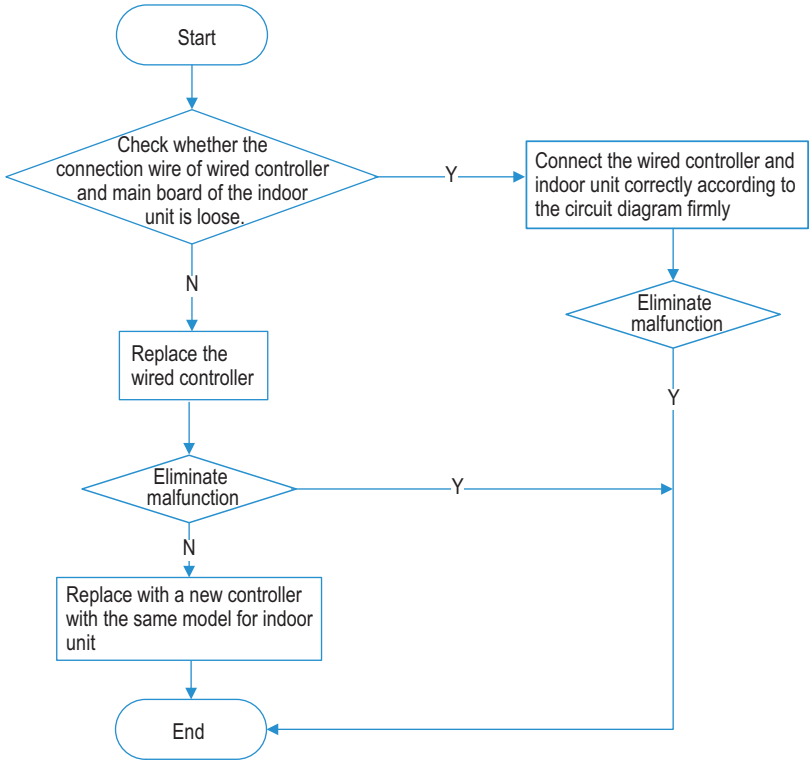

4. High temperature prevention protection E8

Main check points:

(1) outdoor temperature

(2) fan

(3) air inlet and air outlet of indoor/outdoor unit

NOTE: The control board as below means the control board of outdoor unit.

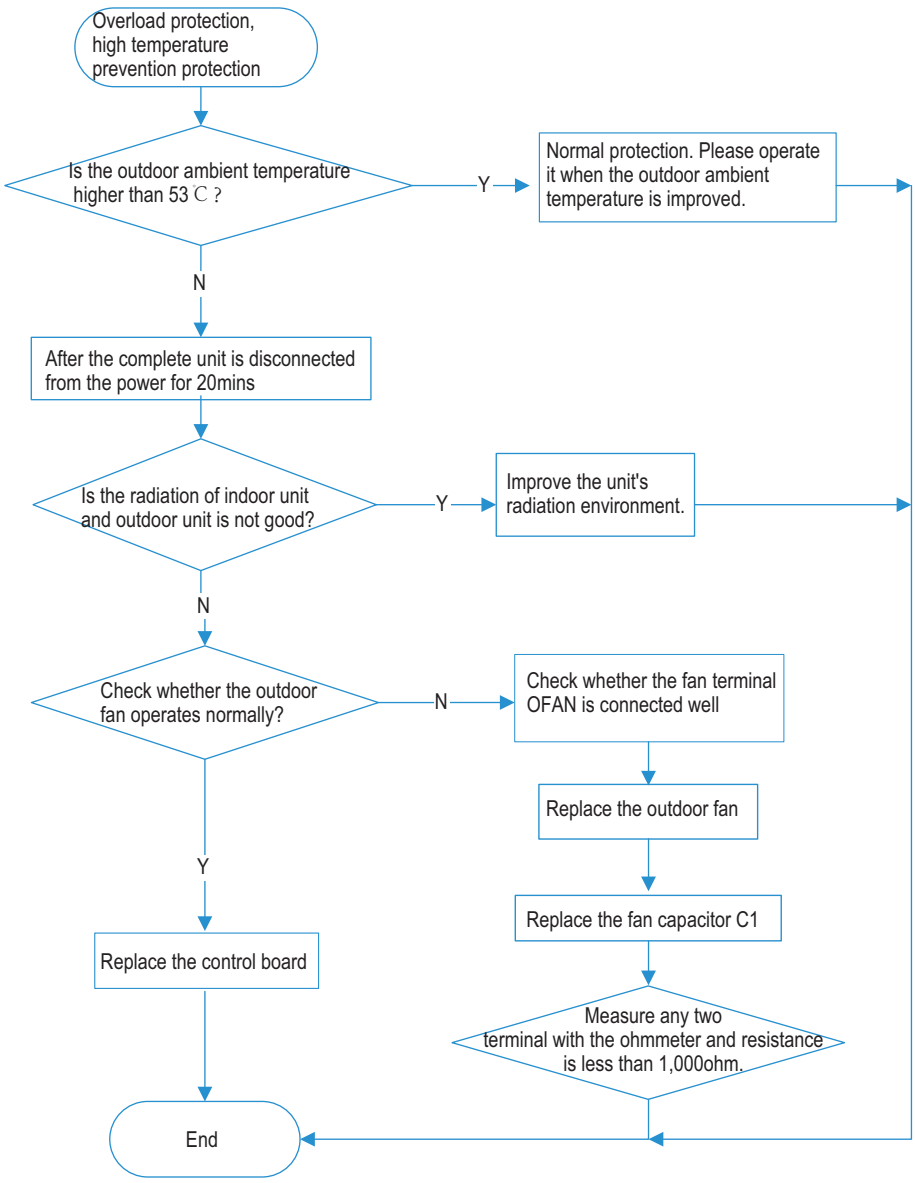

5. Troubleshooting for temperature sensor F3, F4, F5

Main check points:

(1) connection terminal

(2) temperature sensor

(3) main board

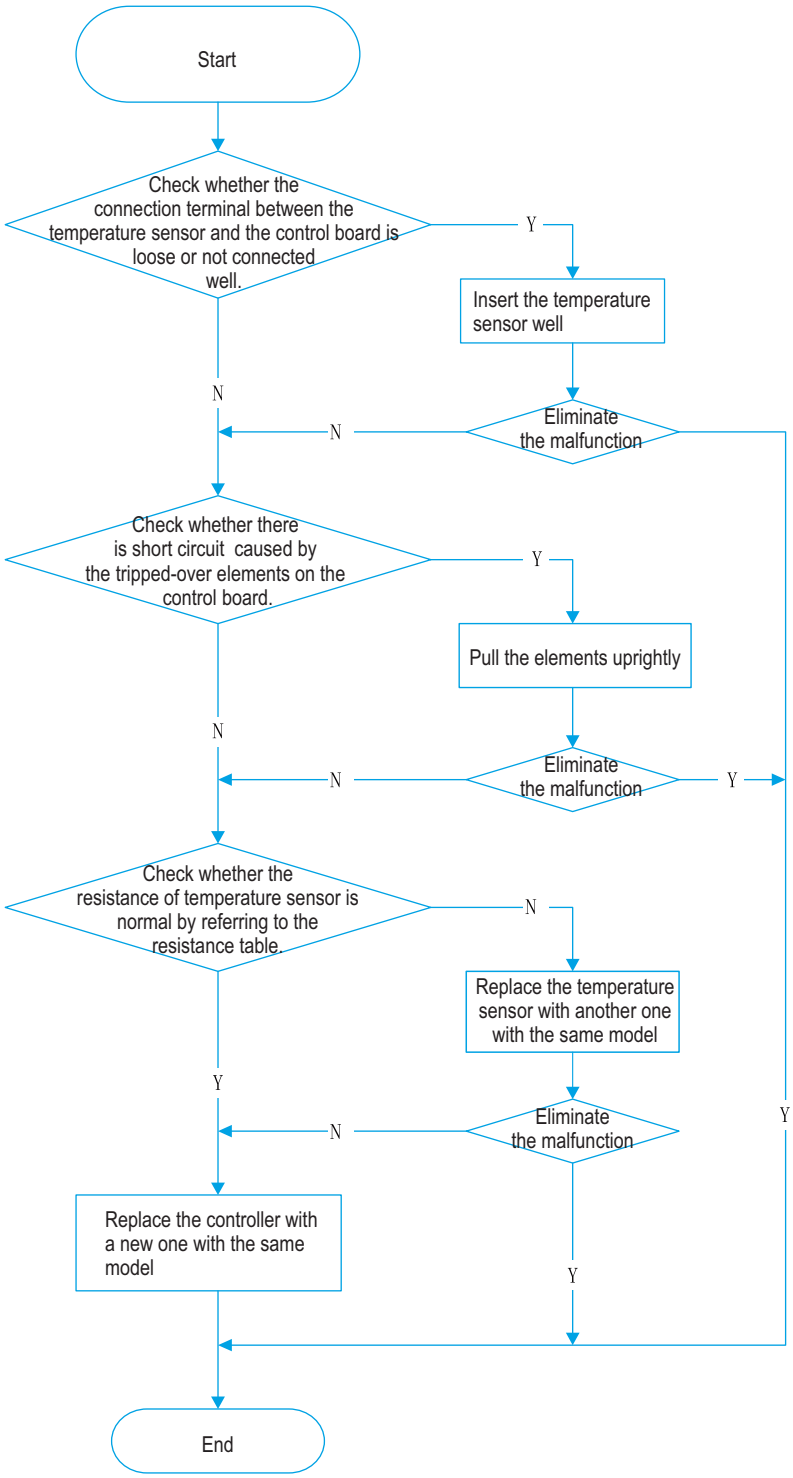

6. IPM protection H5, over-phase current of compressor P5

Main check points:

(1) compressor COMP terminal (2) power supply voltage (3) compressor

(4) charging amount of refrigerant (5) air inlet and air outlet of indoor/outdoor unit

NOTE: The control board as below means the control board of outdoor unit.

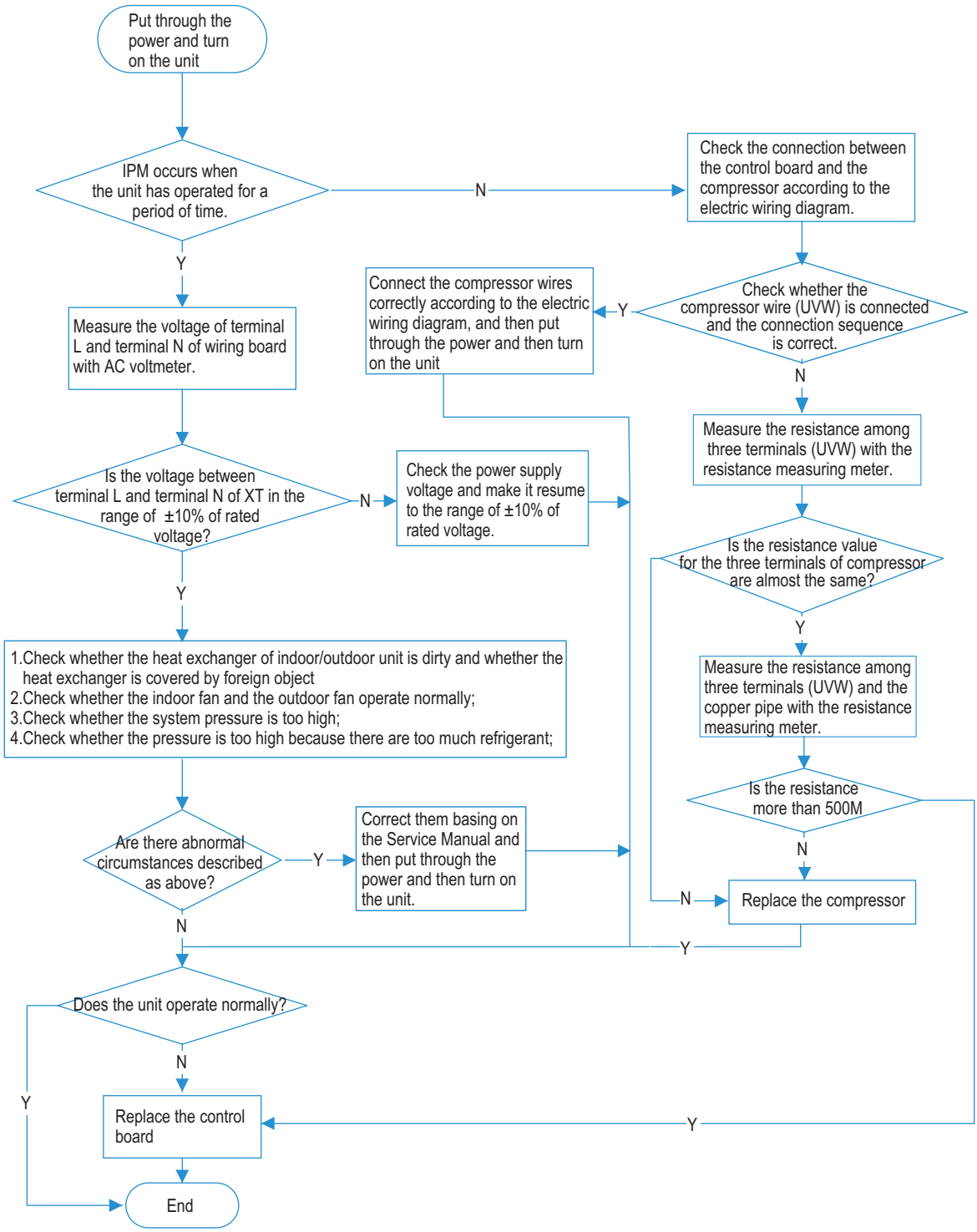

7. Desynchronization diagnosis for compressor H7

Main check point:

(1) system pressure

(2) power supply voltage

NOTE: The control board as below means the control board of outdoor unit.

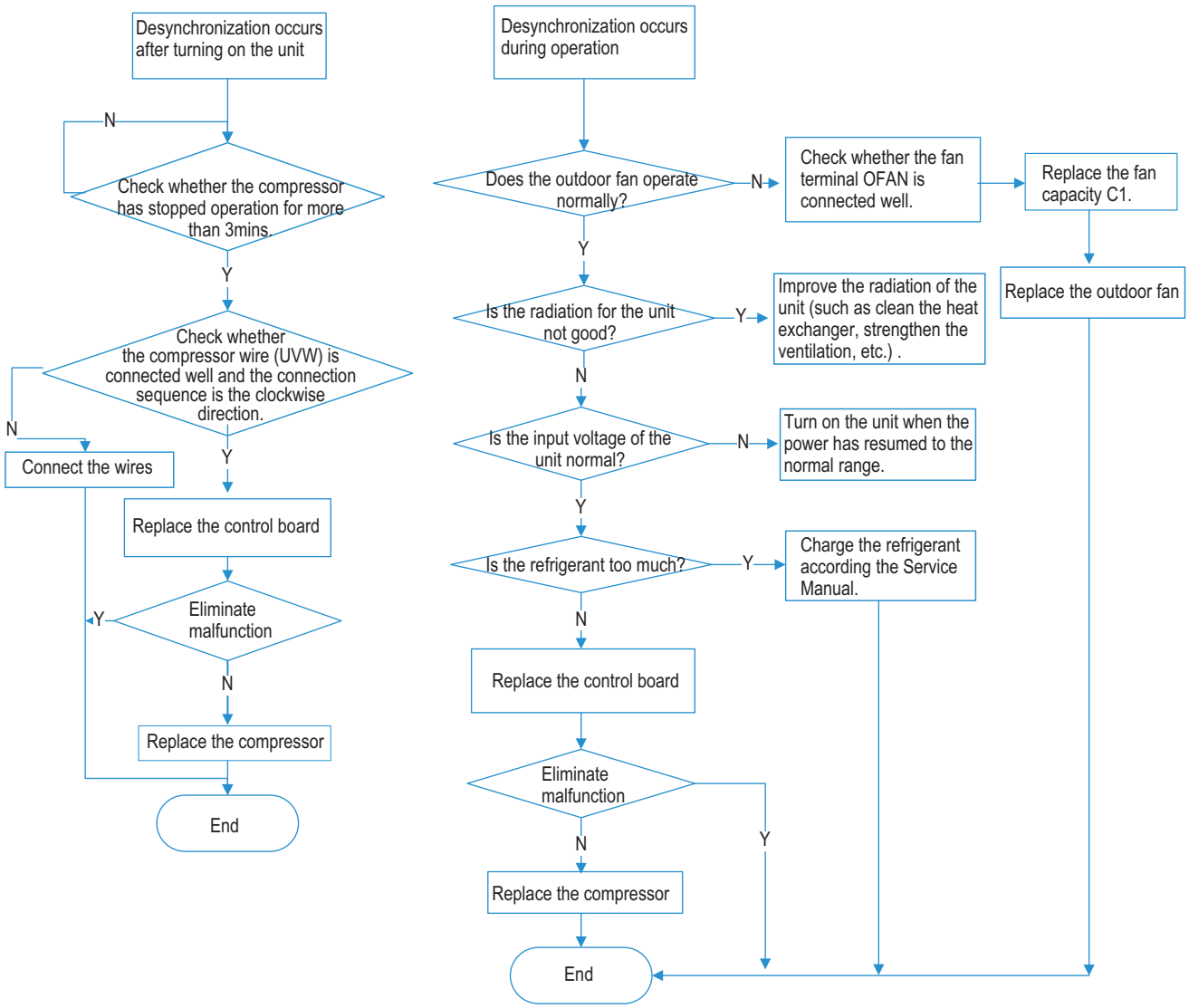

8. Malfunction diagnosis for failure startup Lc

Main check points:

(1) compressor wire

(2) compressor

(3) charging amount of refrigerant

NOTE: The control board as below means the control board of outdoor unit.

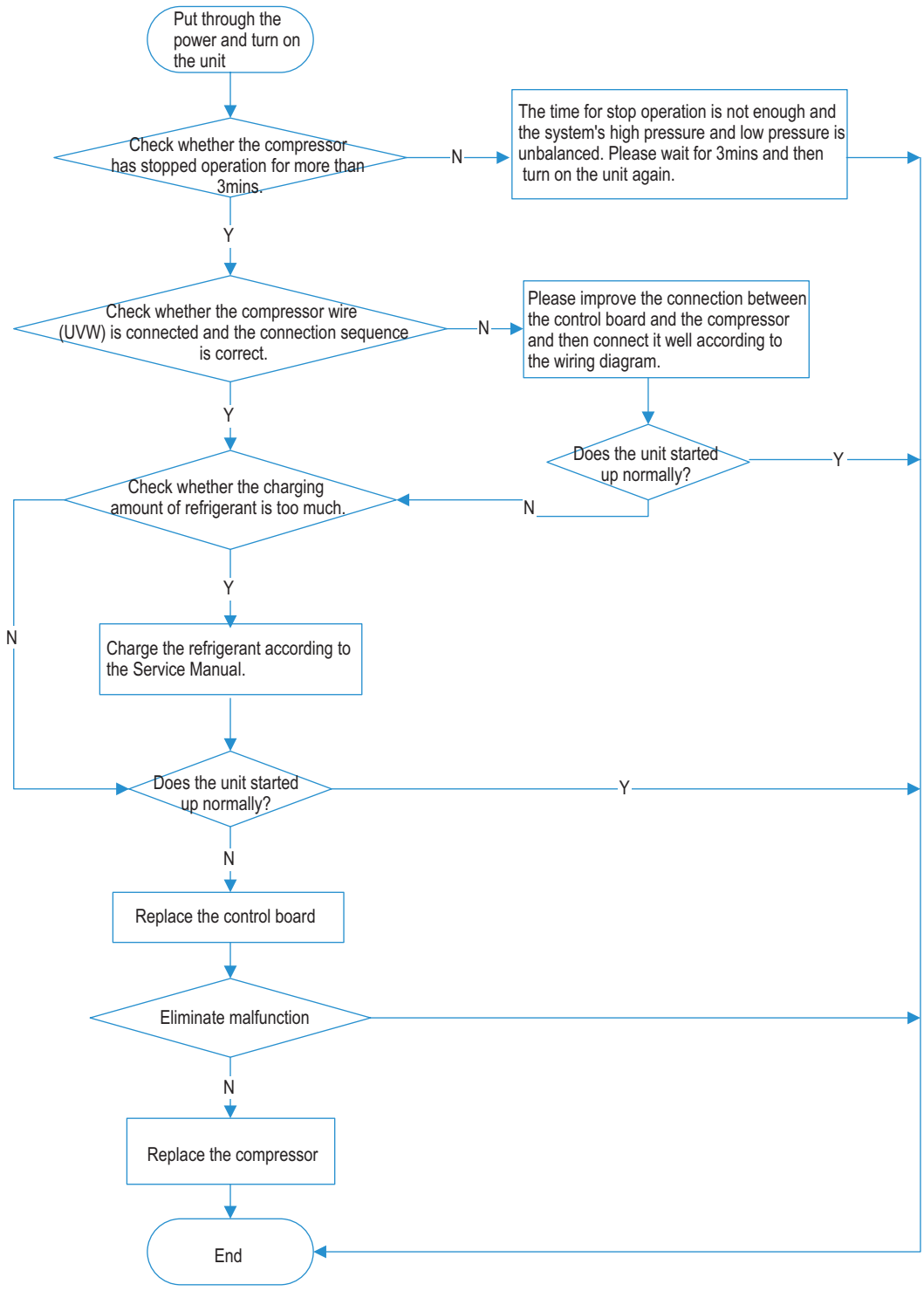

9. Charging malfunction of capacitor PU

Main check points:

(1) wiring board XT

(2) reactor

NOTE: The control board as below means the control board of outdoor unit.

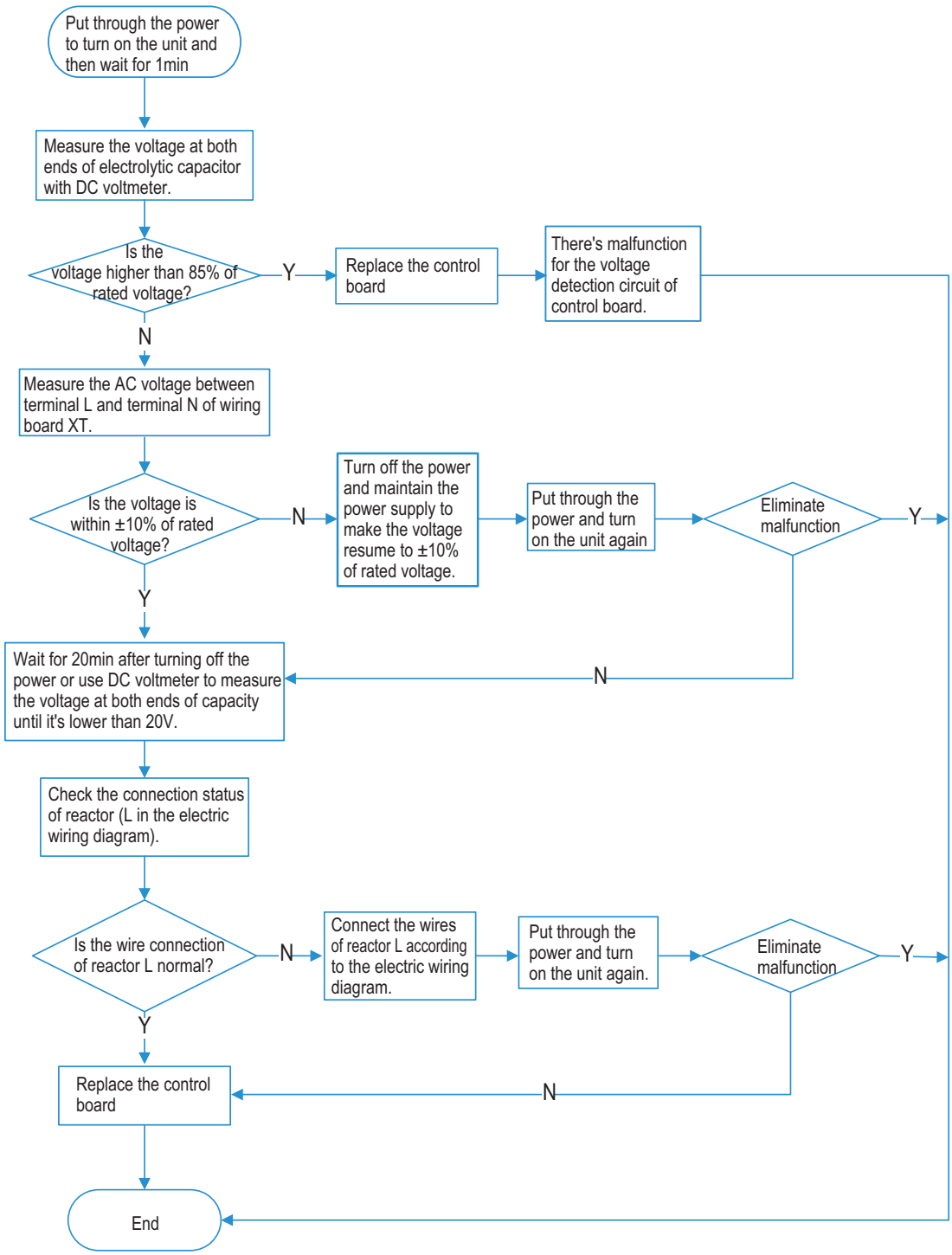

9.3 Troubleshooting for Normal Malfunction

1. Air Conditioner Can't be Started Up

Possible Causes	Discriminating Method (Air conditioner Status)	Troubleshooting
No power supply, or poor connection for power plug	After energization, operation indicator isn't bright and the buzzer can't give out sound	Confirm whether its due to power failure. If yes, wait for power recovery. If not, check power supply circuit and make sure the power plug is connected well.
Wrong wire connection between indoor unit and outdoor unit, or poor connection for wiring terminals	Under normal power supply circumstances, operation indicator isn't bright after energization	Check the circuit according to circuit diagram and connect wires correctly. Make sure all wiring terminals are connected firmly
Electric leakage for air conditioner	After energization, room circuit breaker trips off at once	Make sure the air conditioner is grounded reliably Make sure wires of air conditioner is connected correctly Check the wiring inside air conditioner. Check whether the insulation layer of power cord is damaged; if yes, place the power cord.
Model selection for air switch is improper	After energization, air switch trips off	Select proper air switch

2. Poor Cooling (Heating) for Air Conditioner

Possible Causes	Discriminating Method (Air conditioner Status)	Troubleshooting
Set temperature is improper	Observe the set temperature on remote controller	Adjust the set temperature
Rotation speed of the IDU fan motor is set too low	Small wind blow	Set the fan speed at high or medium
Filter of indoor unit is blocked	Check the filter to see its blocked	Clean the filter
Installation position for indoor unit and outdoor unit is improper	Check whether the installation postion is proper according to installation requirement for air conditioner	Adjust the installation position, and install the rainproof and sunproof for outdoor unit
Refrigerant is leaking	Discharged air temperature during cooling is higher than normal discharged wind temperature; Discharged air temperature during heating is lower than normal discharged wind temperature; Units pressure is much lower than regulated range	Find out the leakage causes and deal with it. Add refrigerant.
Malfunction of 4-way valve	Blow cold wind during heating	Replace the 4-way valve
Malfunction of capillary	Discharged air temperature during cooling is higher than normal discharged wind temperature; Discharged air temperature during heating is lower than normal discharged wind temperature; Unitt pressure is much lower than regulated range. If refrigerant isn't leaking, part of capillary is blocked	Replace the capillary
Flow volume of valve is insufficient	The pressure of valves is much lower than that stated in the specification	Open the valve completely
Malfunction of horizontal louver	Horizontal louver can't swing	Refer to point 3 of maintenance method for details
Malfunction of the IDU fan motor	The IDU fan motor can't operate	Refer to troubleshooting for H6 for maintenance method in details
Malfunction of the ODU fan motor	The ODU fan motor can't operate	Refer to point 4 of maintenance method for details
Malfunction of compressor	Compressor can't operate	Refer to point 5 of maintenance method for details

3. Horizontal Louver Can't Swing

Possible Causes	Discriminating Method (Air conditioner Status)	Troubleshooting
Wrong wire connection, or poor connection	Check the wiring status according to circuit diagram	Connect wires according to wiring diagram to make sure all wiring terminals are connected firmly
Stepping motor is damaged	Stepping motor can't operate	Repair or replace stepping motor
Main board is damaged	Others are all normal, while horizontal louver can't operate	Replace the main board with the same model

4. ODU Fan Motor Can't Operate

Possible causes	Discriminating method (air conditioner status)	Troubleshooting
Wrong wire connection, or poor connection	Check the wiring status according to circuit diagram	Connect wires according to wiring diagram to make sure all wiring terminals are connected firmly
Capacity of the ODU fan motor is damaged	Measure the capacity of fan capacitor with an universal meter and find that the capacity is out of the deviation range indicated on the nameplate of fan capacitor.	Replace the capacity of fan
Power voltage is a little low or high	Use universal meter to measure the power supply voltage. The voltage is a little high or low	Suggest to equip with voltage regulator
Motor of outdoor unit is damaged	When unit is on, cooling/heating performance is bad and ODU compressor generates a lot of noise and heat.	Change compressor oil and refrigerant. If no better, replace the compressor with a new one

5. Compressor Can't Operate

Possible causes	Discriminating method (air conditioner status)	Troubleshooting
Wrong wire connection, or poor connection	Check the wiring status according to circuit diagram	Connect wires according to wiring diagram to make sure all wiring terminals are connected firmly
Capacity of compressor is damaged	Measure the capacity of fan capacitor with an universal meter and find that the capacity is out of the deviation range indicated on the nameplate of fan capacitor.	Replace the compressor capacitor
Power voltage is a little low or high	Use universal meter to measure the power supply voltage. The voltage is a little high or low	Suggest to equip with voltage regulator
Coil of compressor is burnt out	Use universal meter to measure the resistance between compressor terminals and its 0	Repair or replace compressor
Cylinder of compressor is blocked	Compressor can't operate	Repair or replace compressor

6. Air Conditioner is Leaking

Possible causes	Discriminating method (air conditioner status)	Troubleshooting
Drain pipe is blocked	Water leaking from indoor unit	Eliminate the foreign objects inside the drain pipe
Drain pipe is broken	Water leaking from drain pipe	Replace drain pipe
Wrapping is not tight	Water leaking from the pipe connection place of indoor unit	Wrap it again and bundle it tightly

7. Abnormal Sound and Vibration

Possible causes	Discriminating method (air conditioner status)	Troubleshooting
When turn on or turn off the unit, the panel and other parts will expand and theres abnormal sound	Theres the sound of "PAPA"	Normal phenomenon. Abnormal sound will disappear after a few minutes.
When turn on or turn off the unit, theres abnormal sound due to flow of refrigerant inside air conditioner	Water-running sound can be heard	Normal phenomenon. Abnormal sound will disappear after a few minutes.
Foreign objects inside the indoor unit or therere parts touching together inside the indoor unit	Theres abnormal sound fro indoor unit	Remove foreign objects. Adjust all parts position of indoor unit, tighten screws and stick damping plaster between connected parts
Foreign objects inside the outdoor unit or therere parts touching together inside the outdoor unit	Theres abnormal sound fro outdoor unit	Remove foreign objects. Adjust all parts position of outdoor unit, tighten screws and stick damping plaster between connected parts
Short circuit inside the magnetic coil	During heating, the way valve has abnormal electromagnetic sound	Replace magnetic coil
Abnormal shake of compressor	Outdoor unit gives out abnormal sound	Adjust the support foot mat of compressor, tighten the bolts
Abnormal sound inside the compressor	Abnormal sound inside the compressor	If add too much refrigerant during maintenance, please reduce refrigerant properly. Replace compressor for other circumstances.

10. Exploded View and Parts List

MV-E36BIDHW

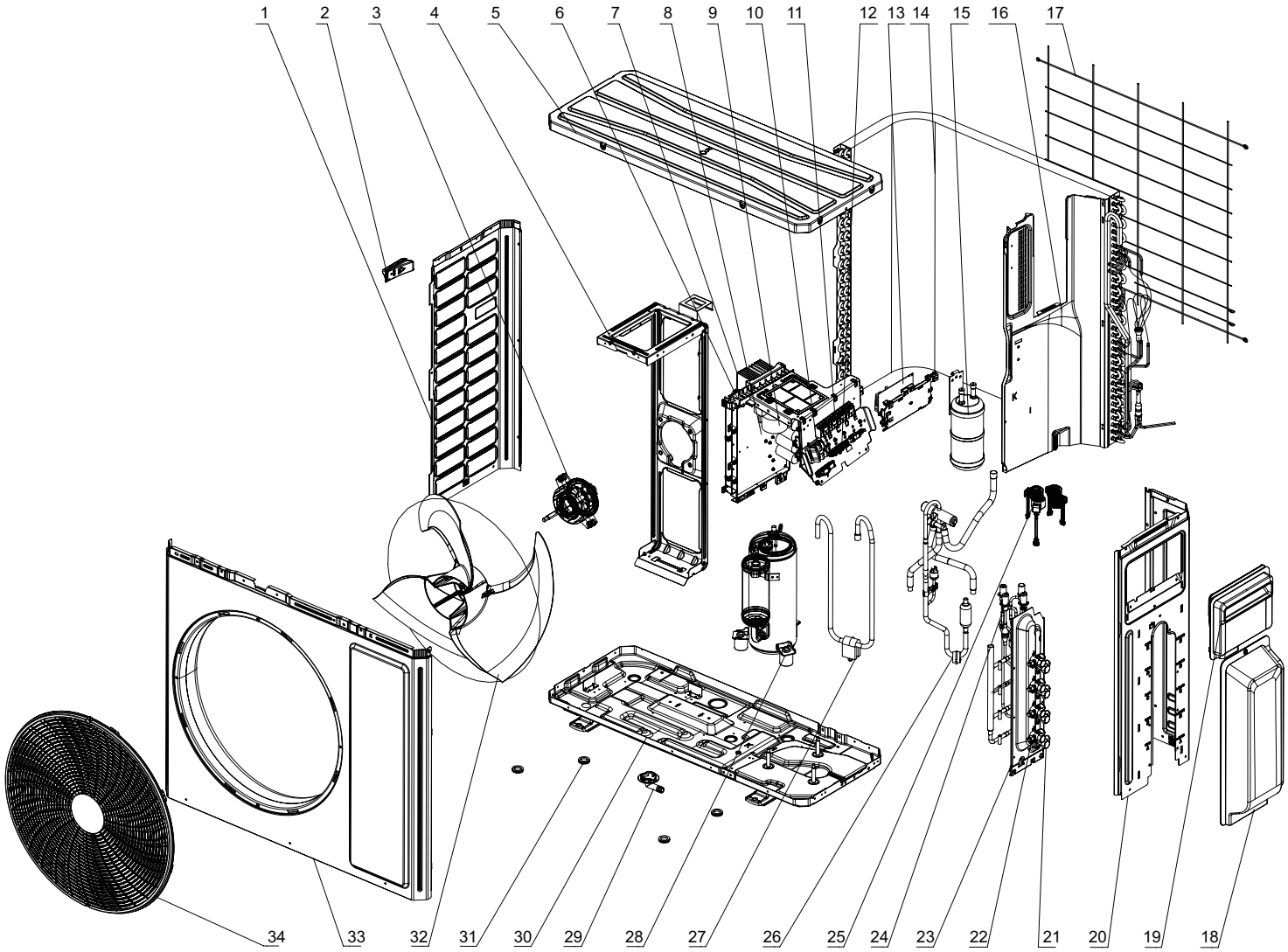

The component is only for rererence; please refer to the actual product.

NO.	Description
1	Left Side Plate
2	Handle
3	Brushless DC Motor
4	Motor Support Sub-assy
5	Top Cover Sub-assy
6	Electric Box Assy
7	Radiator
8	Main Board
9	Filter Board
10	Terminal Board
11	Terminal Board
12	Wire Clamp

NO.	Description
13	Main Board
14	Condenser Assy
15	Gas-liquid Separator Assy
16	Clapboard
17	Rear Grill
18	Valve Cover
19	Handle
20	Right Side Plate
21	Cut off Valve Sub-assy
22	Cut off Valve Sub-assy
23	Valve Support Sub-assy
24	Electronic Expansion Valve Assy

NO.	Description
25	Electric Expand Valve Fitting
26	4-Way Valve Assy
27	Inhalation Tube Sub-assy
28	Compressor and Fittings
29	Drainage Joint
30	Chassis Sub-assy
31	Drainage hole Cap
32	Axial Flow Fan
33	Cabinet
34	Front Grill

Some models may not contain some parts, please refer to the actual product.

MV-E42BIDHW

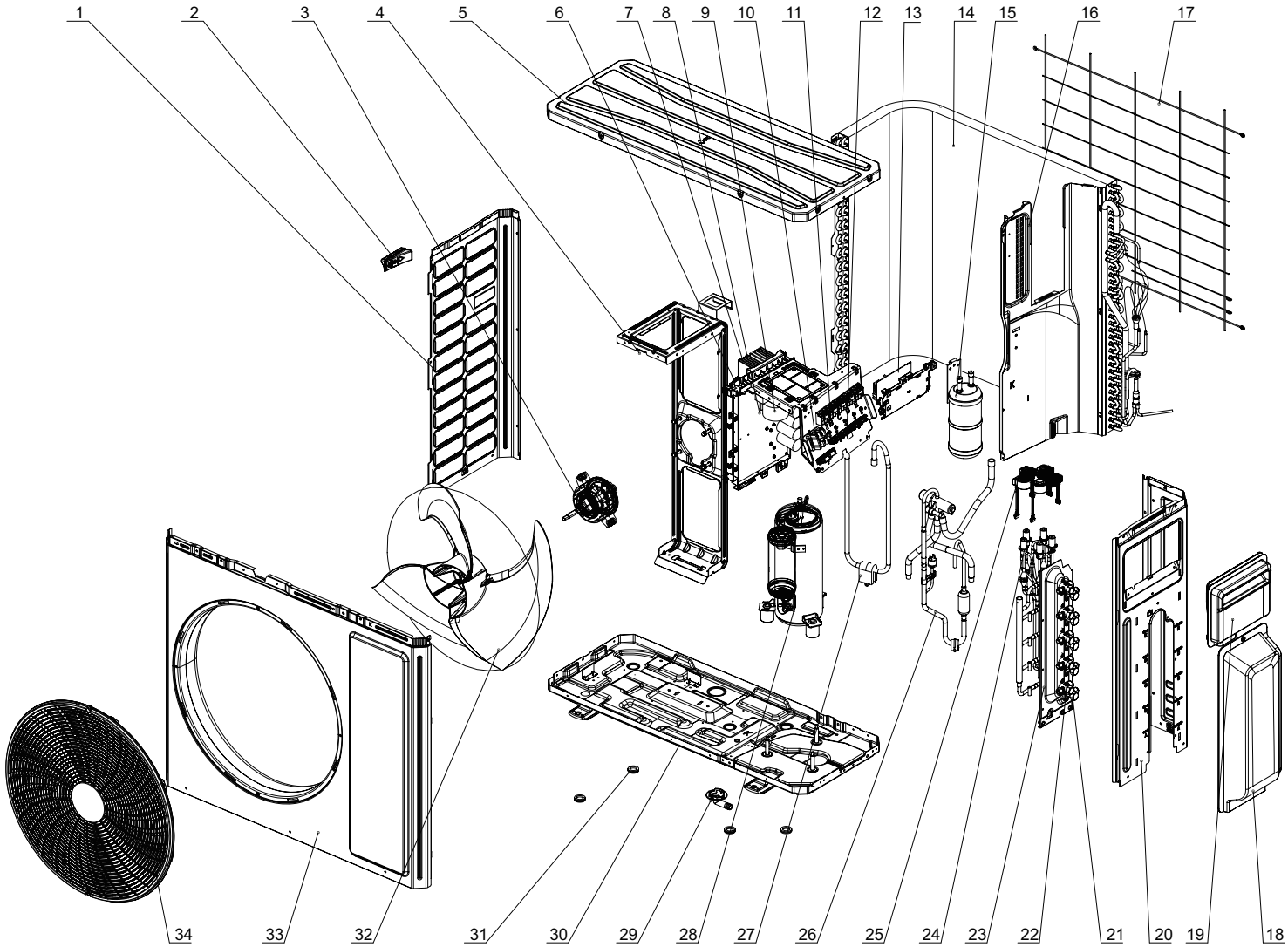

The component is only for rererence; please refer to the actual product.

NO.	Description
1	Left Side Plate
2	Handle
3	Brushless DC Motor
4	Motor Support Sub-assy
5	Top Cover Sub-assy
6	Electric Box Assy
7	Radiator
8	Main Board
9	Filter Board
10	Terminal Board
11	Terminal Board
12	Wire Clamp

NO.	Description
13	Main Board
14	Condenser Assy
15	Gas-liquid Separator Assy
16	Clapboard
17	Rear Grill
18	Valve Cover
19	Handle
20	Right Side Plate
21	Cut off Valve Sub-assy
22	Cut off Valve Sub-assy
23	Valve Support Sub-assy
24	Electronic Expansion Valve Assy

NO.	Description
25	Electric Expand Valve Fitting
26	4-Way Valve Assy
27	Inhalation Tube Sub-assy
28	Compressor and Fittings
29	Drainage Joint
30	Chassis Sub-assy
31	Drainage hole Cap
32	Axial Flow Fan
33	Cabinet
34	Front Grill

Some models may not contain some parts, please refer to the actual product.

11. Removal Procedure

MV-E36BIDHW MV-E42BIDHW

Warning: Be sure to wait for a minimum of 20 minutes after turning off all power supplies and discharge the refrigerant completely before removal.

NOTE: Take 42K model for example.

Step	Procedure
1. Before disassembly	
Complete axonometric drawing.	
2. Remove valve cover	
Remove the connection screw fixing the valve cover and then remove the valve cover.	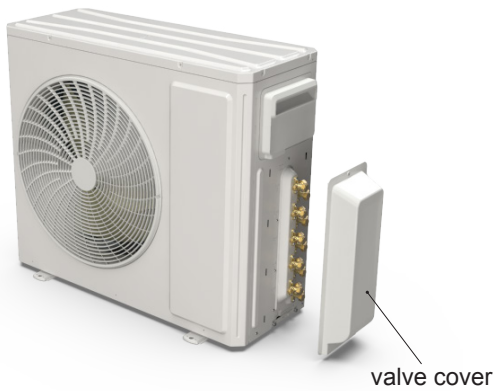
3. Remove handle	
Remove the connection screws fixing the handle and the right side plate, and then remove the handle.	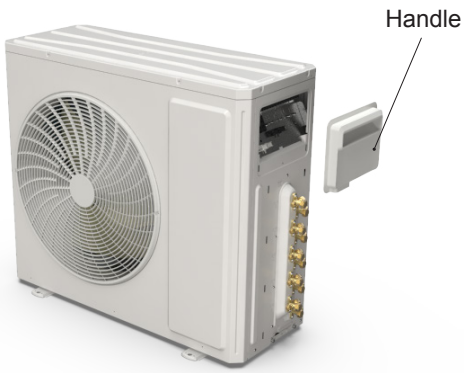

Step	Procedure
4. Remove top panel	
Remove the connection screws connecting the top panel and the front panel, and then remove the top panel.	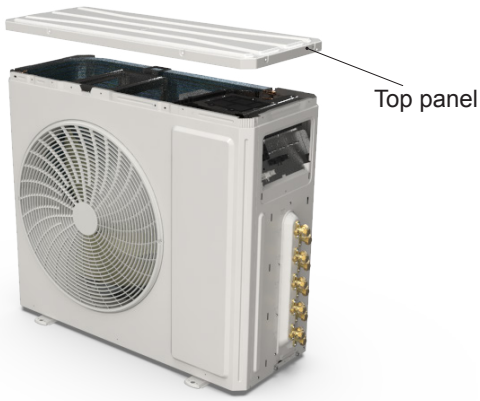
5. Remove front grille	
Remove the connection screws connecting the front grille and the front panel, and then loosen the clasp to remove the front grille.	
6. Remove front panel	
Remove the screws connecting the front panel and then remove the front panel.	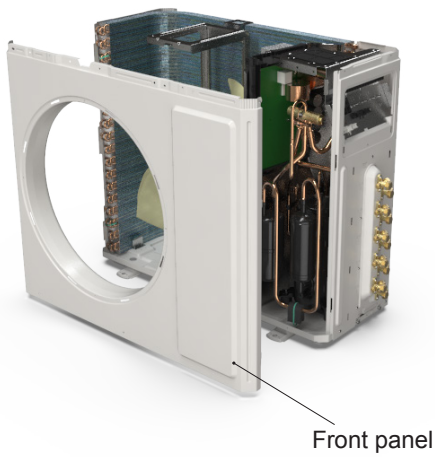

Step	Procedure
7. Remove right side plate	Right side plate 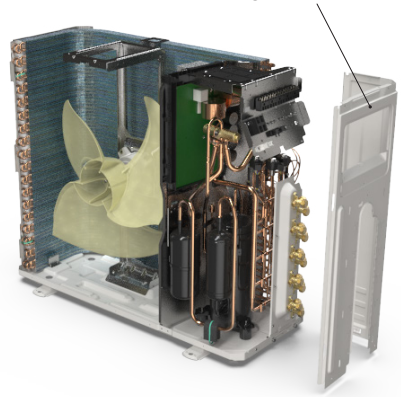
Remove the screws connecting the right side plate with the chassis and the valve support. Then remove the right side plate.	
8. Remove rear grill	Rear grill 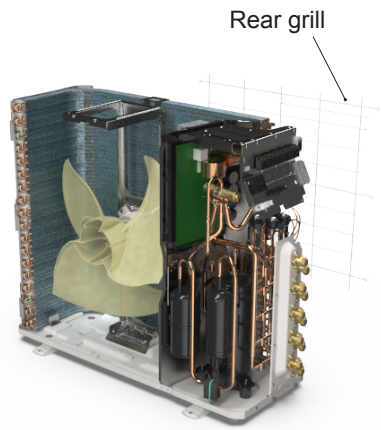
Remove the screws connecting the rear grill and left side plate, and then remove the rear grill.	
9. Remove left side plate	Left side plate 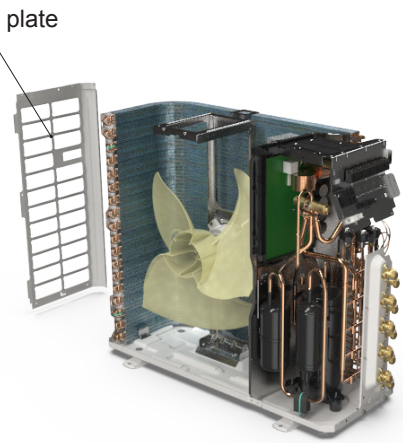
Remove the screws fixing the left side plate with the chassis and the condenser support, and then remove the left side plate.	

Step	Procedure
10. Remove axial flow blade	
	Remove the nut on the blade and then remove the axial flow blade.
	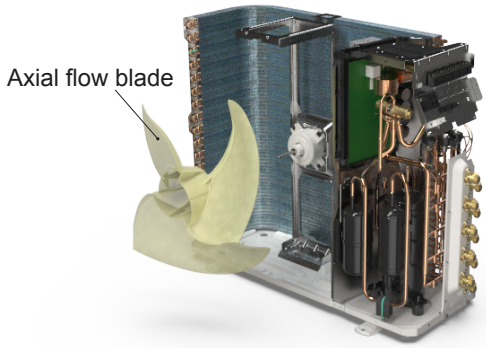
11. Remove motor and motor support	
	Remove the 4 tapping screws fixing the motor and disconnect the leading wire insert of the motor. Then remove the motor. Remove the 2 tapping screws fixing the motor support and chassis, and then lift the motor support to remove it.
	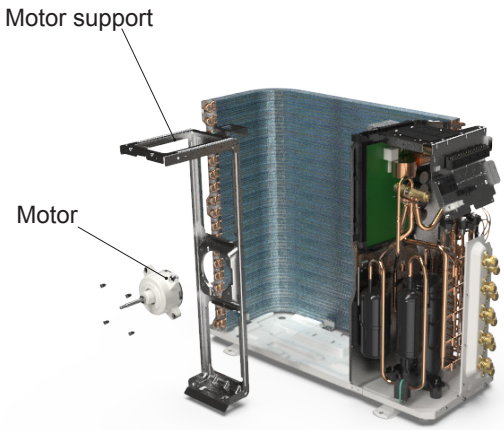
12. Remove electric box assy	
	Remove the screws fixing the electric box assy and the middle isolation sheet, loosen the wire bundle, unplug the wiring terminals, and then lift the electric box assy to remove it.
	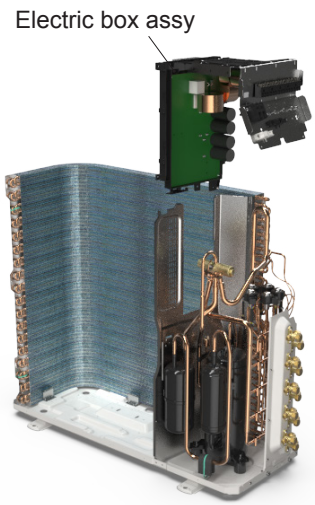

Step	Procedure
13. Remove 4-way valve assy	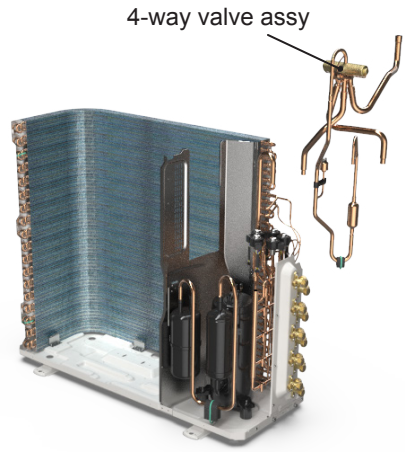
Remove screws fixing the electricbox; loosen the wire bundle; pull out the wiring terminals and then pull electric box upwards to remove it.	
14. Remove valve support sub-assy and expansion valve assy	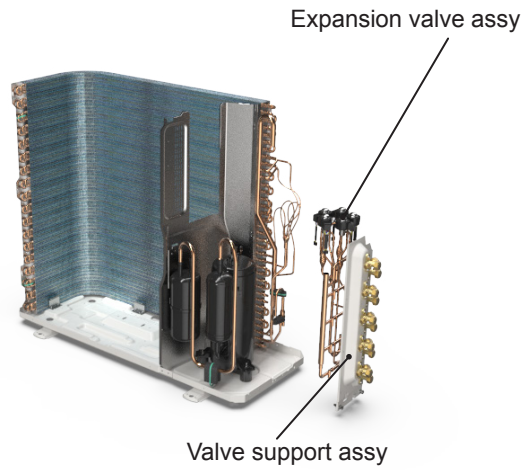
Remove the screw connecting the valve support and the chassis, and then remove the valve support assy. Unsolder the welding joint connecting the electronic expansion valve assy with the cut-off valve and the condenser connection pipe, and then remove the e xpansion valve assy.	
15. Remove middle isolation sheet	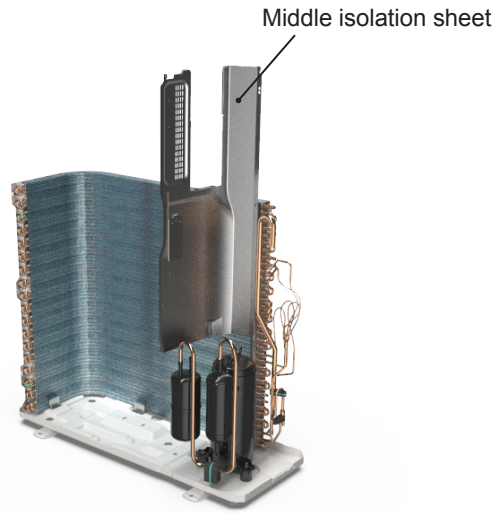
Remove the screws connecting the middle isolation sheet with the chassis assy and the condenser assy, and then remove the middle isolation sheet.	

Step	Procedure
16. Remove compressor	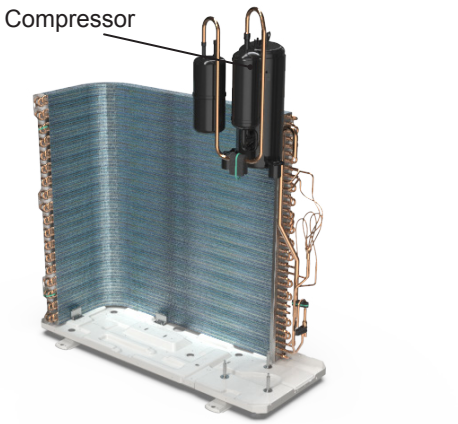
Remove the 3 foot nuts fixing the compressor and then remove the compressor.	
17. Remove condenser assy	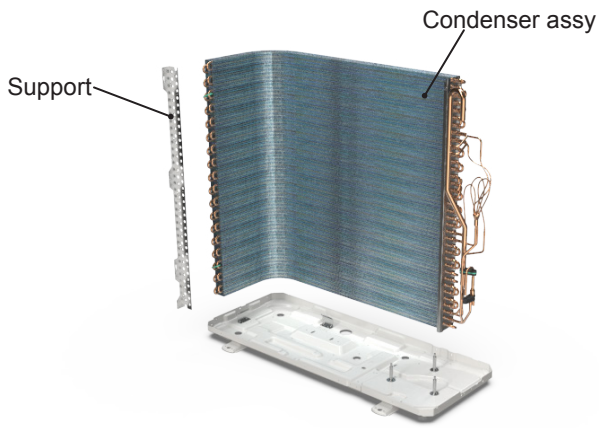
Remove the screws fixing the condenser support and then remove the condenser support. Remove the screws connecting the condenser support and the chassis assy, and then remove the condenser assy.	

Appendix

Appendix 1: Reference Sheet of Celsius and Fahrenheit

Conversion formula for Fahrenheit degree and Celsius degree: Tf=Tcx1.8+32

Set temperature

Fahrenheit display temperature（˚F）	Fahrenheit（˚F）	Celsius（˚C）	Fahrenheit display temperature（˚F）	Fahrenheit（˚F）	Celsius（˚C）	Fahrenheit display temperature（˚F）	Fahrenheit（˚F）	Celsius（˚C）
61	60.8	16	69/70	69.8	21	78/79	78.8	26
62/63	62.6	17	71/72	71.6	22	80/81	80.6	27
64/65	64.4	18	73/74	73.4	23	82/83	82.4	28
66/67	66.2	19	75/76	75.2	24	84/85	84.2	29
68	68	20	77	77	25	86	86	30

Ambient temperature

Fahrenheit display temperature（˚F）	Fahrenheit（˚F）	Celsius（˚C）	Fahrenheit display temperature（˚F）	Fahrenheit（˚F）	Celsius（˚C）	Fahrenheit display temperature（˚F）	Fahrenheit（˚F）	Celsius（˚C）
32/33	32	0	55/56	55.4	13	79/80	78.8	26
34/35	33.8	1	57/58	57.2	14	81	80.6	27
36	35.6	2	59/60	59	15	82/83	82.4	28
37/38	37.4	3	61/62	60.8	16	84/85	84.2	29
39/40	39.2	4	63	62.6	17	86/87	86	30
41/42	41	5	64/65	64.4	18	88/89	87.8	31
43/44	42.8	6	66/67	66.2	19	90	89.6	32
45	44.6	7	68/69	68	20	91/92	91.4	33
46/47	46.4	8	70/71	69.8	21	93/94	93.2	34
48/49	48.2	9	72	71.6	22	95/96	95	35
50/51	50	10	73/74	73.4	23	97/98	96.8	36
52/53	51.8	11	75/76	75.2	24	99	98.6	37
54	53.6	12	77/78	77	25			

Appendix 2: Pipe Expanding Method

⚠ **Note:**

Improper pipe expanding is the main cause of refrigerant leakage.Please expand the pipe according to the following steps:

A:Cut the pip

- Confirm the pipe length according to the distance of indoor unit and outdoor unit.
- Cut the required pipe with pipe cutter.

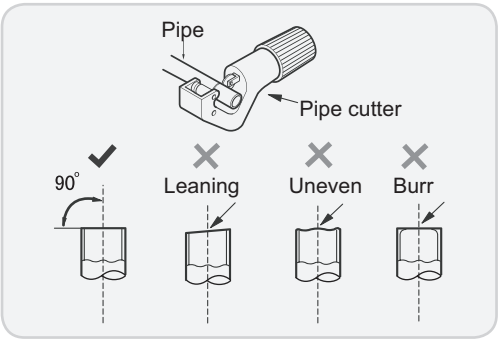

B:Remove the burrs

- Remove the burrs with shaper and prevent the burrs from getting into the pipe.

C:Put on suitable insulating pipe.

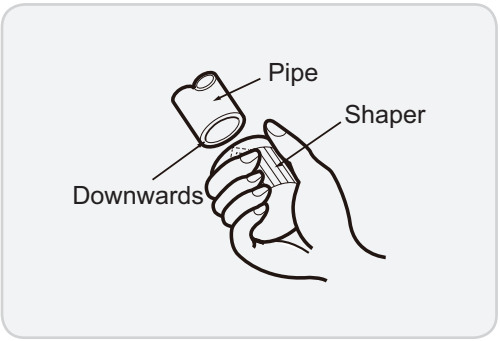

D:Put on the union nut

- Remove the union nut on the indoor connection pipe and outdoor valve; install the union nut on the pipe.

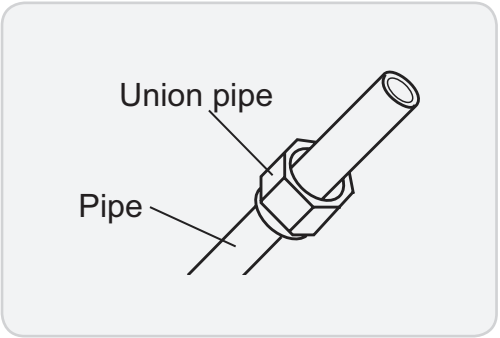

E:Expand the port

- Expand the port with expander.

⚠ **Note:**

- "A" is different according to the diameter, please refer to the sheet below:

Outer diameter(mm)	A(mm)	
	Max	Min
Φ6 - 6.35 (1/4")	1.3	0.7
Φ9 - Φ9.52 (3/8")	1.6	1.0
Φ12 - 12.70 (1/2")	1.8	1.0
Φ16 - 15.88 (5/8")	2.4	2.2

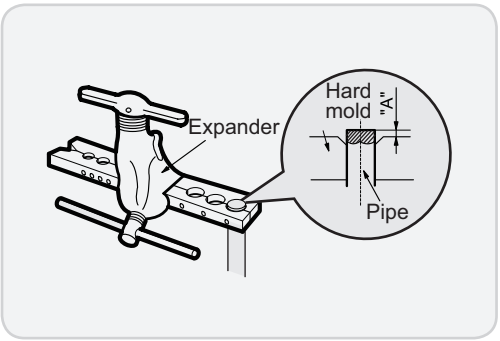

F:Inspection

- Check the quality of expanding port. If there is any blemish, expand the port again according to the steps above.

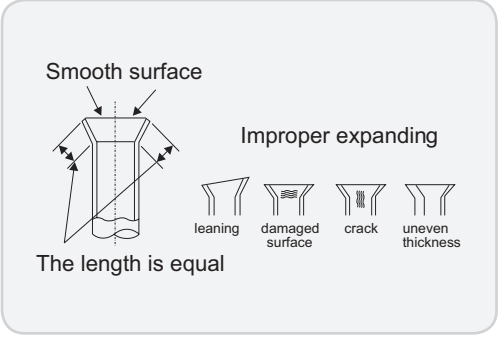

Appendix 3: List of Resistance for Temperature Sensor

Resistance Table of Ambient Temperature Sensor for Indoor and Outdoor Units(15K)

Temp(°C)	Resistance(kΩ)	Temp(°C)	Resistance(kΩ)	Temp(°C)	Resistance(kΩ)	Temp(°C)	Resistance(kΩ)
-19	138.1	20	18.75	59	3.848	98	1.071
-18	128.6	21	17.93	60	3.711	99	1.039
-17	121.6	22	17.14	61	3.579	100	1.009
-16	115	23	16.39	62	3.454	101	0.98
-15	108.7	24	15.68	63	3.333	102	0.952
-14	102.9	25	15	64	3.217	103	0.925
-13	97.4	26	14.36	65	3.105	104	0.898
-12	92.22	27	13.74	66	2.998	105	0.873
-11	87.35	28	13.16	67	2.896	106	0.848
-10	82.75	29	12.6	68	2.797	107	0.825
-9	78.43	30	12.07	69	2.702	108	0.802
-8	74.35	31	11.57	70	2.611	109	0.779
-7	70.5	32	11.09	71	2.523	110	0.758
-6	66.88	33	10.63	72	2.439	111	0.737
-5	63.46	34	10.2	73	2.358	112	0.717
-4	60.23	35	9.779	74	2.28	113	0.697
-3	57.18	36	9.382	75	2.206	114	0.678
-2	54.31	37	9.003	76	2.133	115	0.66
-1	51.59	38	8.642	77	2.064	116	0.642
0	49.02	39	8.297	78	1.997	117	0.625
1	46.6	40	7.967	79	1.933	118	0.608
2	44.31	41	7.653	80	1.871	119	0.592
3	42.14	42	7.352	81	1.811	120	0.577
4	40.09	43	7.065	82	1.754	121	0.561
5	38.15	44	6.791	83	1.699	122	0.547
6	36.32	45	6.529	84	1.645	123	0.532
7	34.58	46	6.278	85	1.594	124	0.519
8	32.94	47	6.038	86	1.544	125	0.505
9	31.38	48	5.809	87	1.497	126	0.492
10	29.9	49	5.589	88	1.451	127	0.48
11	28.51	50	5.379	89	1.408	128	0.467
12	27.18	51	5.197	90	1.363	129	0.456
13	25.92	52	4.986	91	1.322	130	0.444
14	24.73	53	4.802	92	1.282	131	0.433
15	23.6	54	4.625	93	1.244	132	0.422
16	22.53	55	4.456	94	1.207	133	0.412
17	21.51	56	4.294	95	1.171	134	0.401
18	20.54	57	4.139	96	1.136	135	0.391
19	19.63	58	3.99	97	1.103	136	0.382

Resistance Table of Tube Temperature Sensors for Indoor and Outdoor (20K)

Temp(°C)	Resistance(kΩ)	Temp(°C)	Resistance(kΩ)	Temp(°C)	Resistance(kΩ)	Temp(°C)	Resistance(kΩ)
-19	181.4	20	25.01	59	5.13	98	1.427
-18	171.4	21	23.9	60	4.948	99	1.386
-17	162.1	22	22.85	61	4.773	100	1.346
-16	153.3	23	21.85	62	4.605	101	1.307
-15	145	24	20.9	63	4.443	102	1.269
-14	137.2	25	20	64	4.289	103	1.233
-13	129.9	26	19.14	65	4.14	104	1.198
-12	123	27	18.13	66	3.998	105	1.164
-11	116.5	28	17.55	67	3.861	106	1.131
-10	110.3	29	16.8	68	3.729	107	1.099
-9	104.6	30	16.1	69	3.603	108	1.069
-8	99.13	31	15.43	70	3.481	109	1.039
-7	94	32	14.79	71	3.364	110	1.01
-6	89.17	33	14.18	72	3.252	111	0.983
-5	84.61	34	13.59	73	3.144	112	0.956
-4	80.31	35	13.04	74	3.04	113	0.93
-3	76.24	36	12.51	75	2.94	114	0.904
-2	72.41	37	12	76	2.844	115	0.88
-1	68.79	38	11.52	77	2.752	116	0.856
0	65.37	39	11.06	78	2.663	117	0.833
1	62.13	40	10.62	79	2.577	118	0.811
2	59.08	41	10.2	80	2.495	119	0.77
3	56.19	42	9.803	81	2.415	120	0.769
4	53.46	43	9.42	82	2.339	121	0.746
5	50.87	44	9.054	83	2.265	122	0.729
6	48.42	45	8.705	84	2.194	123	0.71
7	46.11	46	8.37	85	2.125	124	0.692
8	43.92	47	8.051	86	2.059	125	0.674
9	41.84	48	7.745	87	1.996	126	0.658
10	39.87	49	7.453	88	1.934	127	0.64
11	38.01	50	7.173	89	1.875	128	0.623
12	36.24	51	6.905	90	1.818	129	0.607
13	34.57	52	6.648	91	1.736	130	0.592
14	32.98	53	6.403	92	1.71	131	0.577
15	31.47	54	6.167	93	1.658	132	0.563
16	30.04	55	5.942	94	1.609	133	0.549
17	28.68	56	5.726	95	1.561	134	0.535
18	27.39	57	5.519	96	1.515	135	0.521
19	26.17	58	5.32	97	1.47	136	0.509

Resistance Table of Discharge Temperature Sensor for Outdoor(50K)

Temp(°C)	Resistance(kΩ)	Temp(°C)	Resistance(kΩ)	Temp(°C)	Resistance(kΩ)	Temp(°C)	Resistance(kΩ)
-29	853.5	10	98	49	18.34	88	4.75
-28	799.8	11	93.42	50	17.65	89	4.61
-27	750	12	89.07	51	16.99	90	4.47
-26	703.8	13	84.95	52	16.36	91	4.33
-25	660.8	14	81.05	53	15.75	92	4.20
-24	620.8	15	77.35	54	15.17	93	4.08
-23	580.6	16	73.83	55	14.62	94	3.96
-22	548.9	17	70.5	56	14.09	95	3.84
-21	516.6	18	67.34	57	13.58	96	3.73
-20	486.5	19	64.33	58	13.09	97	3.62
-19	458.3	20	61.48	59	12.62	98	3.51
-18	432	21	58.77	60	12.17	99	3.41
-17	407.4	22	56.19	61	11.74	100	3.32
-16	384.5	23	53.74	62	11.32	101	3.22
-15	362.9	24	51.41	63	10.93	102	3.13
-14	342.8	25	49.19	64	10.54	103	3.04
-13	323.9	26	47.08	65	10.18	104	2.96
-12	306.2	27	45.07	66	9.83	105	2.87
-11	289.6	28	43.16	67	9.49	106	2.79
-10	274	29	41.34	68	9.17	107	2.72
-9	259.3	30	39.61	69	8.85	108	2.64
-8	245.6	31	37.96	70	8.56	109	2.57
-7	232.6	32	36.38	71	8.27	110	2.50
-6	220.5	33	34.88	72	7.99	111	2.43
-5	209	34	33.45	73	7.73	112	2.37
-4	198.3	35	32.09	74	7.47	113	2.30
-3	199.1	36	30.79	75	7.22	114	2.24
-2	178.5	37	29.54	76	7.00	115	2.18
-1	169.5	38	28.36	77	6.76	116	2.12
0	161	39	27.23	78	6.54	117	2.07
1	153	40	26.15	79	6.33	118	2.02
2	145.4	41	25.11	80	6.13	119	1.96
3	138.3	42	24.13	81	5.93	120	1.91
4	131.5	43	23.19	82	5.75	121	1.86
5	125.1	44	22.29	83	5.57	122	1.82
6	119.1	45	21.43	84	5.39	123	1.77
7	113.4	46	20.6	85	5.22	124	1.73
8	108	47	19.81	86	5.06	125	1.68
9	102.8	48	19.06	87	4.90	126	1.64

NOTE CONCERNING PROTECTION OF ENVIRONMENT



This product must not be disposed of via normal household waste after its service life, but must be taken to a collection station for the recycling of electrical and electronic devices. The symbol on the product, the operating instructions or the packaging indicate such disposal procedures. The materials are recyclable in accordance with their respective symbols. By means of re-use, material recycling or any other form of recycling old appliances you are making an important contribution to the protection of our environment. Please ask your local council where your nearest disposal station is located.

INFORMATION CONCERNING USED REFRIGERANT MEDIUM

This unit is containing fluorinated gases included in the Kyoto protocol.
The maintenance and the liquidation must be carried out by qualified personnel.

Type of refrigerant: R32
The quantity of the refrigerant: Please see the unit label.
The value GWP: 675 (1 kg R32 = 0,675 t CO_2 eq)
GWP = Global Warming Potential



Appliance filled with flammable gas R32.

In case of quality problem or other please contact your local supplier or authorized service center.
Emergency number: 112

PRODUCER

SINCLAIR CORPORATION Ltd.
16 Great Queen Street
WC2B 5AH London
United Kingdom
www.sinclair-world.com

This product was manufactured in China (Made in China).

REPRESENTATIVE

SINCLAIR Global Group s.r.o.
Purkynova 45
612 00 Brno
Czech Republic

TECHNICAL SUPPORT

SINCLAIR Global Group s.r.o.
Purkynova 45
612 00 Brno
Czech Republic
Tel.: +420 800 100 285 | Fax: +420 541 590 124
www.sinclair-solutions.com | info@sinclair-solutions.com

CE


sinclair
AIR CONDITIONING