EN

SERVICE MANUAL

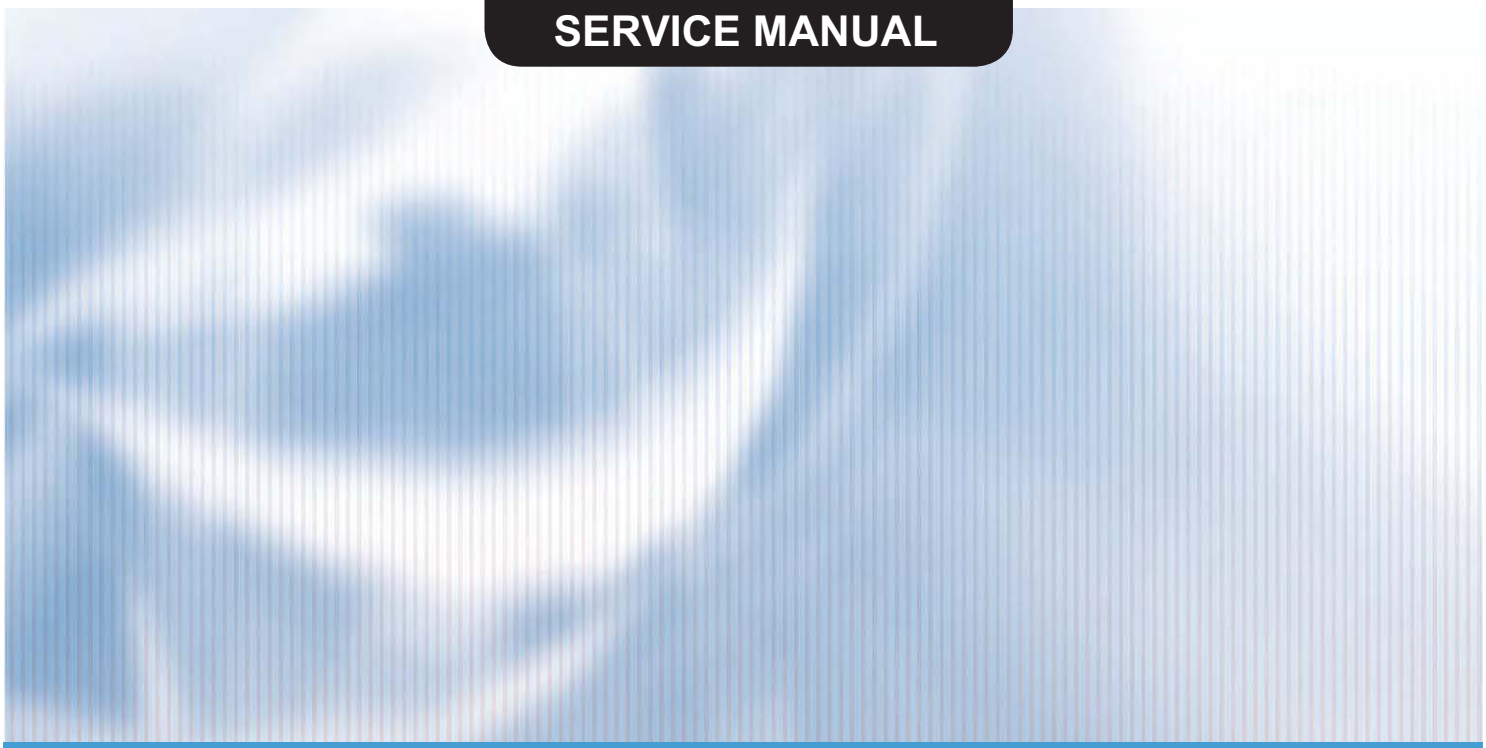

CONSOLE SERIES

ASP-xxBI

sinclair
AIR CONDITIONING

“Original instructions”

IMPORTANT NOTE:

Read this manual carefully before installing or operating your new air conditioning unit. Make sure to save this manual for future reference.

Table of Contents

Part Ⅰ : Technical Information 1

1. Summary 1

2. Specifications 3

2.1 Specification Sheet 3

2.2 Operation Characteristic Curve 7

2.3 Capacity Variation Ratio According to Temperature 7

2.4 Noise Curve 8

3. Outline Dimension Diagram 9

3.1 Indoor Unit 9

3.2 Outdoor Unit 10

4. Refrigerant System Diagram 12

5. Electrical Part 13

5.1 Wiring Diagram 13

5.2 PCB Printed Diagram 16

6. Function and Control 19

6.1 Remote Controller Introduction 19

6.3 Ewpe Smart App Operation Manual 24

6.4 Brief Description of Modes and Functions 25

Part Ⅱ : Installation and Maintenance 27

7. Notes for Installation and Maintenance 27

8. Installation 31

8.1 Requirements for Electric Connection 31

8.2 Installation of indoor unit 31

8.3 Outdoor Unit Installation 37

8.4 Vacuum Pumping and Leak Detection 38

8.5 Check after Installation and Test Operation 38

9. Maintenance 39

9.1 Error Code List 39

9.2 Procedure of Troubleshooting 46

9.3 Maintenance Method for Normal Malfunction 59

11. Removal Procedure 69
11.1 Removal Procedure of Indoor Unit 69
11.2 Removal Procedure of Outdoor Unit 73

Appendix: 88
Appendix 1: Reference Sheet of Celsius and Fahrenheit 88
Appendix 2: Configuration of Connection Pipe 88
Appendix 3: Pipe Expanding Method 89
Appendix 4: List of Resistance for Temperature Sensor 90

Part Ⅰ : Technical Information

1. Summary

Indoor Unit

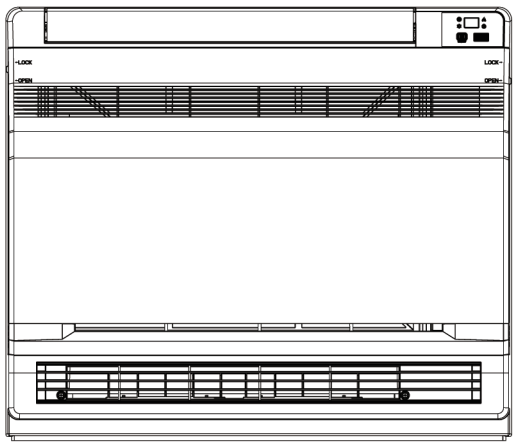

Outdoor Unit

ASP-09BI

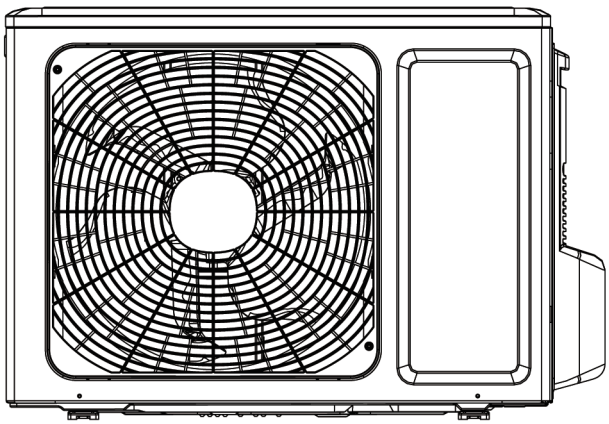

ASP-12BI

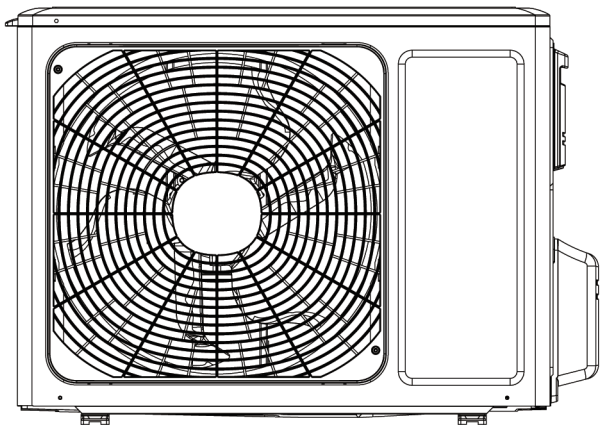

ASP-18BI

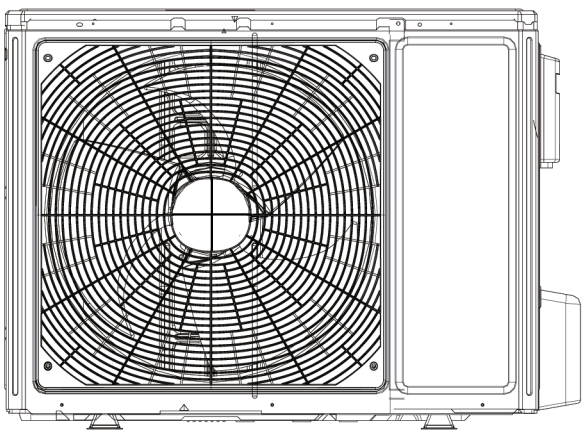

Remote Controller

YAA1FB8(WiFi)



2. Specifications

2.1 Specification Sheet

Parameter		Unit	Value	
Model			ASP-12BI	ASP-09BI
Product Code			CV010002900	CV010002700
Power Supply	Rated Voltage	V ～	220-240	220-240
	Rated Frequency	Hz	50	50
	Phases		1	1
Power Supply Mode			Outdoor	Outdoor
Cooling Capacity(Min~Max)		W	3520(800~4400)	2700(700~3400)
Heating Capacity(Min~Max)		W	3800(1100~4400)	2900(600~3500)
Cooling Power Input(Min~Max)		W	1000(160~1500)	720(170~1300)
Heating Power Input(Min~Max)		W	960(165~1500)	730(130~1350)
Cooling Current Input		A	4.48	3.5
Heating Current Input		A	4.30	3.6
Rated Input		W	1500	1350
Rated Current		A	6.72	6.0
Air Flow Volume(SH/H/HM/M/LM/L/SL)		m^3/h	600/520/480/440/400/360/280	500/430/410/370/330/280/250
Dehumidifying Volume		L/h	1.2	0.8
EER		W/W	3.52	3.75
COP		W/W	3.96	3.97
SEER		W/W	7.0	7.2
SCOP(Average/Warmer/Colder)		W/W	4.1/5.3/-	4.0/5.3/-
Application Area		m^2	16-24	12-18
Indoor Unit	Indoor Unit Model		ASP-12BI	ASP-09BI
	Indoor Unit Product Code		CV010N02900	CV010N02700
	Fan Type		Centrifugal	Centrifugal
	Fan Diameter Length(DXL)	mm	Φ370X80	Φ370X80
	Cooling Speed (SH/H/HM/M/LM/L/SL)	r/min	750/650/600/550/500/450/350	650/560/530/480/430 /370/320
	Heating Speed (SH/H/HM/M/LM/L/SL)	r/min	750/650/600/550/500/450/350	650/560/530/480/430/370/320
	Fan Motor Power Output	W	30	30
	Fan Motor RLA	A	0.15	0.15
	Fan Motor Capacitor	μF	/	/
	Evaporator Form		Aluminum Fin-copper Tube	Aluminum Fin-copper Tube
	Evaporator Pipe Diameter	mm	Φ7	Φ7
	Evaporator Row-fin Gap	mm	2-1.3	2-1.3
	Evaporator Coil Length (LXDXW)	mm	511X400X25.4	511X400X25.4
	Swing Motor Model		MP24EB/MP24AE	MP24EB/MP24AE
	Swing Motor Power Output	W	1.5/1.5	1.5/1.5
	Fuse Current	A	3.15	3.15
	Sound Pressure Level (SS/H/MH/M/ML/L/SL)	dB (A)	Cooling:44/40/38/36/33/29/25 Heating:44/40/38/36/33/29/25	Cooling:39/36/33/31/29/26/23 Heating:38/36/32/30/28/25/22
	Sound Power Level (SS/H/MH/M/ML/L/SL)	dB (A)	Cooling:54/50/48/46/43/39/35 Heating:54/50/48/46/43/39/35	Cooling:50/48/45/44/42/38/34 Heating:50/48/45/44/42/38/34
	Dimension (WXHXD)	mm	700X215X600	700X215X600
	Dimension of Carton Box (LXWXH)	mm	785X280X682	785X280X682
	Dimension of Package(LXWXH)	mm	788X295X685	788X295X685
	Net Weight	kg	15.5	15.5
	Gross Weight	kg	18.5	18.5

Outdoor Unit	Outdoor Unit Model		ASP-12BI	ASP-09BI
	Outdoor Unit Product Code		CV010W02900	CV010W02700
	Compressor Manufacturer		ZHUHAI LANDA COMPRESSOR CO.,LTD	ZHUHAI LANDA COMPRESSOR CO., LTD
	Compressor Model		QXF-A102zE190B	QXF-A079zE190A
	Compressor Oil		FW68DA	FW68DA
	Compressor Type		Rotary	Rotary
	Compressor LRA.	A	/	/
	Compressor RLA	A	4.60	4.6
	Compressor Power Input	W	1023	790
	Compressor Overload Protector		HPC115/95U1/KSD115ºC	HPC115/95U1/KSD115ºC
	Throttling Method		Electron expansion valve	Electron expansion valve
	Set Temperature Range	ºC	16~30	16~30
	Cooling Operation Ambient Temperature Range	ºC	-15~43	-15~43
	Heating Operation Ambient Temperature Range	ºC	-22~24	-22~24
	Condenser Form		Aluminum Fin-copper Tube	Aluminum Fin-copper Tube
	Condenser Pipe Diameter	mm	Φ7.94	Φ7
	Condenser Rows-fin Gap	mm	1-1.4	1-1.4
	Condenser Coil Length (LXDXW)	mm	731X19.05X550	710X19.05X508
	Fan Motor Speed	rpm	900	900
	Fan Motor Power Output	W	30	30
	Fan Motor RLA	A	0.36	0.36
	Fan Motor Capacitor	μF	/	/
	Outdoor Unit Air Flow Volume	m^3/h	2200	1600
	Fan Type		Axial-flow	Axial-flow
	Fan Diameter	mm	Φ438	Φ400
	Defrosting Method		Automatic Defrosting	Automatic Defrosting
	Climate Type		T1	T1
	Isolation		I	I
	Moisture Protection		IPX4	IPX4
	Permissible Excessive Operating Pressure for the Discharge Side	MPa	4.3	4.3
	Permissible Excessive Operating Pressure for the Suction Side	MPa	2.5	2.5
	Sound Pressure Level (H/M/L)	dB (A)	52/-/-	49/-/-
	Sound Power Level (H/M/L)	dB (A)	62/-/-	60/-/-
	Dimension(WXHXD)	mm	848X596X320	782X540X320
	Dimension of Carton Box (LXWXH)	mm	878X360X630	820X355X580
	Dimension of Package(LXWXH)	mm	881X363X645	823X358X595
	Net Weight	kg	30.5	27.5
	Gross Weight	kg	33.5	30
	Refrigerant		R32	R32
	Refrigerant Charge	kg	0.75	0.55
Connection Pipe	Connection Pipe Length	m	5	5
	Connection Pipe Gas Additional Charge	g/m	16	16
	Outer Diameter Liquid Pipe	mm	Φ6	Φ6
	Outer Diameter Gas Pipe	mm	Φ9.52	Φ9.52
	Max Distance Height	m	10	10
	Max Distance Length	m	20	20
	Note: The connection pipe applies metric diameter.			

The above data is subject to change without notice. Please refer to the nameplate of the unit.

Parameter		Unit	Value
Model			ASP-18BI
Product Code			CV010002800
Power Supply	Rated Voltage	V ～	220-240
	Rated Frequency	Hz	50
	Phases		1
Power Supply Mode			Outdoor
Cooling Capacity(Min~Max)		W	5200(1260~6600)
Heating Capacity(Min~Max)		W	5330(1120~6800)
Cooling Power Input(Min~Max)		W	1550(380~2450)
Heating Power Input(Min~Max)		W	1500(350~2500)
Cooling Current Input		A	7.1
Heating Current Input		A	6.7
Rated Input		W	2500
Rated Current		A	11.1
Air Flow Volume(SH/H/HM/M/LM/L/SL)		m^3/h	700/650/580/520/460/410/320
Dehumidifying Volume		L/h	1.8
EER		W/W	3.4
COP		W/W	3.55
SEER		W/W	6.6
SCOP(Average/Warmer/Colder)		W/W	/
Application Area		m^2	23-34
Indoor Unit	Indoor Unit Model		ASP-18BI
	Indoor Unit Product Code		CV010N02800
	Fan Type		Centrifugal
	Fan Diameter Length(DXL)	mm	Φ370X80
	Cooling Speed (SH/H/HM/M/LM/L/SL)	r/min	840/800/720/650/580/530/410 810/770/690/620/550/500/380
	Heating Speed (SH/H/HM/M/LM/L/SL)	r/min	930/840/760/690/620/570/480 850/800/720/650/580/530/470
	Fan Motor Power Output	W	30
	Fan Motor RLA	A	0.15
	Fan Motor Capacitor	μF	/
	Evaporator Form		Aluminum Fin-copper Tube
	Evaporator Pipe Diameter	mm	Φ7
	Evaporator Row-fin Gap	mm	2-1.3
	Evaporator Coil Length (LXDXW)	mm	511X400X25.4
	Swing Motor Model		MP24EB/MP24AE
	Swing Motor Power Output	W	1.5/1.5
	Fuse Current	A	3.15
	Sound Pressure Level (SS/H/MH/M/ML/L/SL)	dB (A)	47/45/42/40/37/35/31
	Sound Power Level (SS/H/MH/M/ML/L/SL)	dB (A)	57/55/52/50/47/45/41
	Dimension (WXHXD)	mm	700X215X600
	Dimension of Carton Box (LXWXH)	mm	785X280X682
	Dimension of Package(LXWXH)	mm	788X283X697
	Net Weight	kg	15.5
	Gross Weight	kg	18.5

Outdoor Unit	Outdoor Unit Model		ASP-18BI
	Outdoor Unit Product Code		CV010W02800
	Compressor Manufacturer		ZHUHAI LANDA COMPRESSOR CO.,LTD
	Compressor Model		QXF-B141zF030A
	Compressor Oil		68DA
	Compressor Type		Rotary
	Compressor LRA.	A	25
	Compressor RLA	A	6.5
	Compressor Power Input	W	1410
	Compressor Overload Protector		1NT11L-6233 or KSD115ºC or HPC115/95U1
	Throttling Method		Electron expansion valve
	Set Temperature Range	ºC	16~30
	Cooling Operation Ambient Temperature Range	ºC	-15~43
	Heating Operation Ambient Temperature Range	ºC	-22~24
	Condenser Form		Aluminum Fin-copper Tube
	Condenser Pipe Diameter	mm	Φ7
	Condenser Rows-fin Gap	mm	2-1.4
	Condenser Coil Length (LXDXW)	mm	851X38.1X660
	Fan Motor Speed	rpm	800
	Fan Motor Power Output	W	60
	Fan Motor RLA	A	0.4
	Fan Motor Capacitor	μF	/
	Outdoor Unit Air Flow Volume	m^3/h	3200
	Fan Type		Axial-flow
	Fan Diameter	mm	Φ520
	Defrosting Method		Automatic Defrosting
	Climate Type		T1
	Isolation		I
	Moisture Protection		IPX4
	Permissible Excessive Operating Pressure for the Discharge Side	MPa	4.3
	Permissible Excessive Operating Pressure for the Suction Side	MPa	2.5
	Sound Pressure Level (H/M/L)	dB (A)	57/-/-
	Sound Power Level (H/M/L)	dB (A)	65/-/-
	Dimension(WXHXD)	mm	965X700X396
	Dimension of Carton Box (LXWXH)	mm	1026X455X735
	Dimension of Package(LXWXH)	mm	1029X458X750
	Net Weight	kg	46
	Gross Weight	kg	50.5
	Refrigerant		R410A
	Refrigerant Charge	kg	0.95
Connection Pipe	Connection Pipe Length	m	5
	Connection Pipe Gas Additional Charge	g/m	20
	Outer Diameter Liquid Pipe	mm	Φ6
	Outer Diameter Gas Pipe	mm	Φ12
	Max Distance Height	m	10
	Max Distance Length	m	25
	Note: The connection pipe applies metric diameter.		

The above data is subject to change without notice. Please refer to the nameplate of the unit.

2.2 Operation Characteristic Curve

Cooling

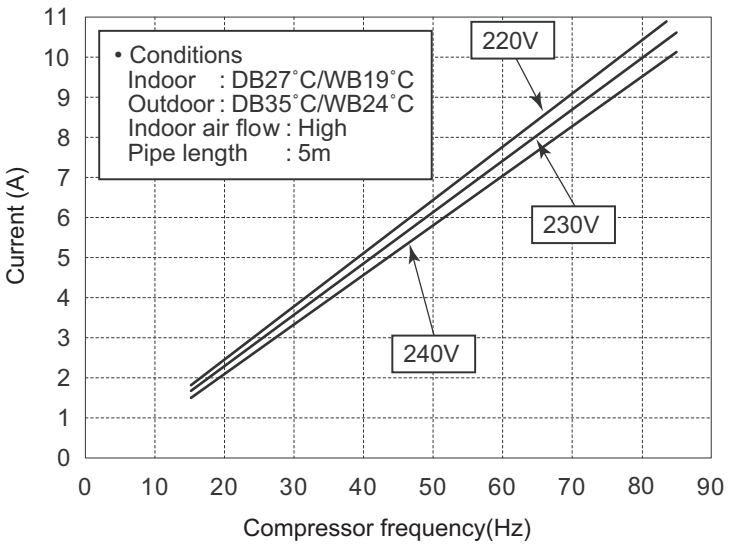

Heating

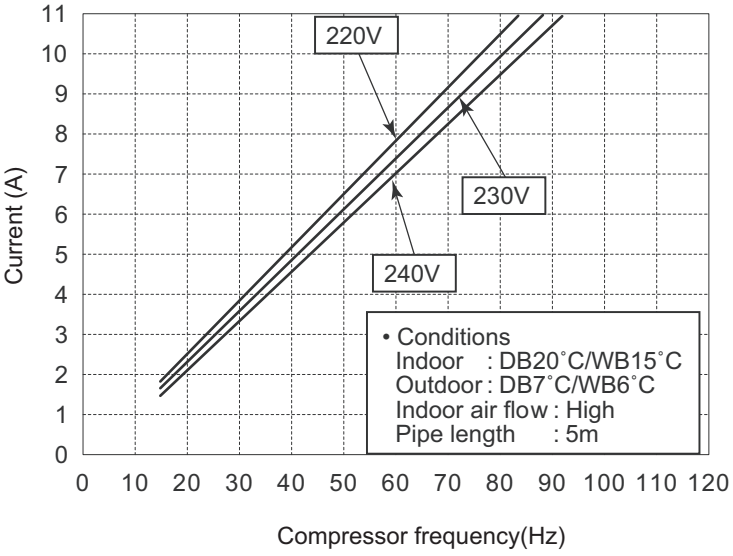

2.3 Capacity Variation Ratio According to Temperature

Cooling

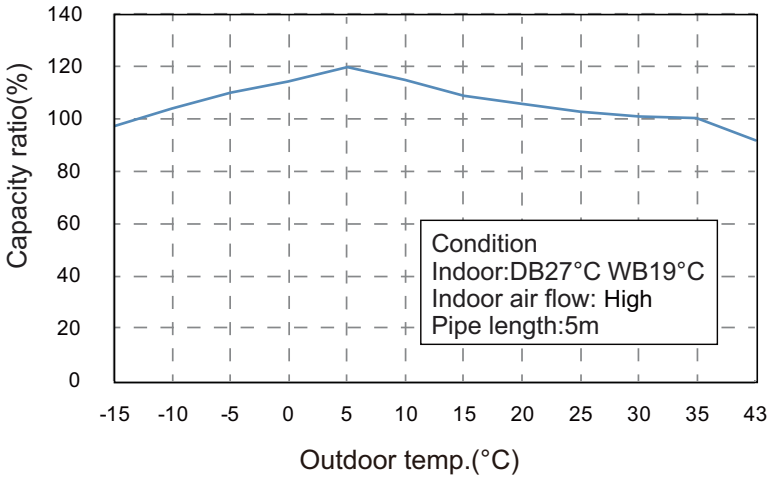

Heating

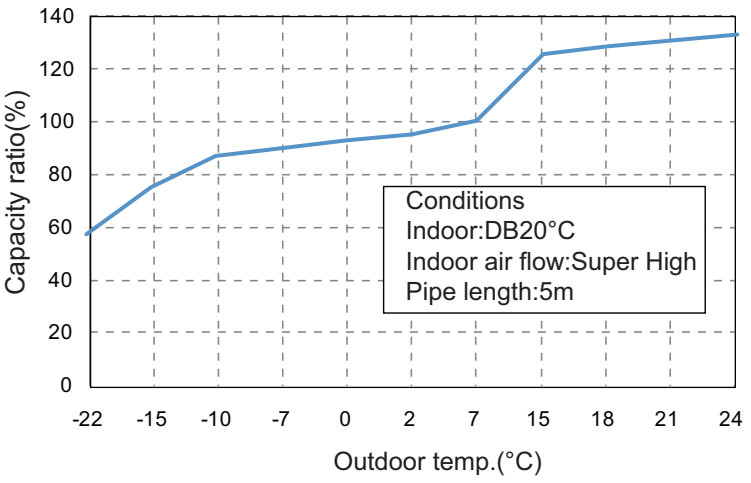

2.4 Noise Curve

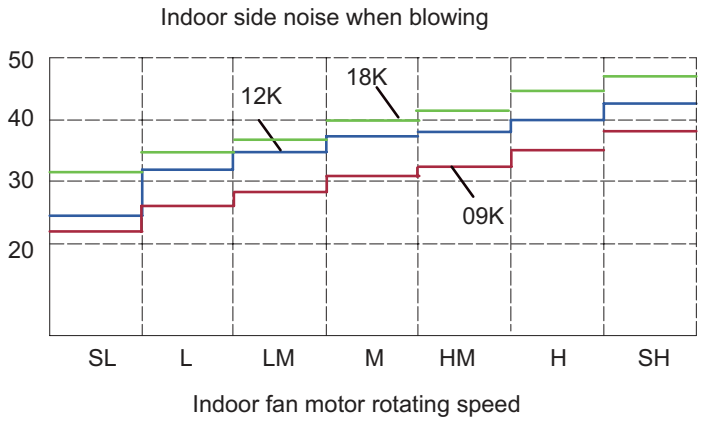

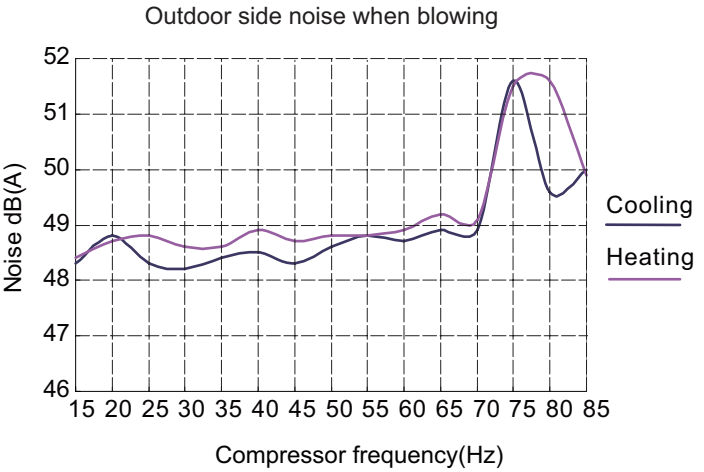

3. Outline Dimension Diagram

3.1 Indoor Unit

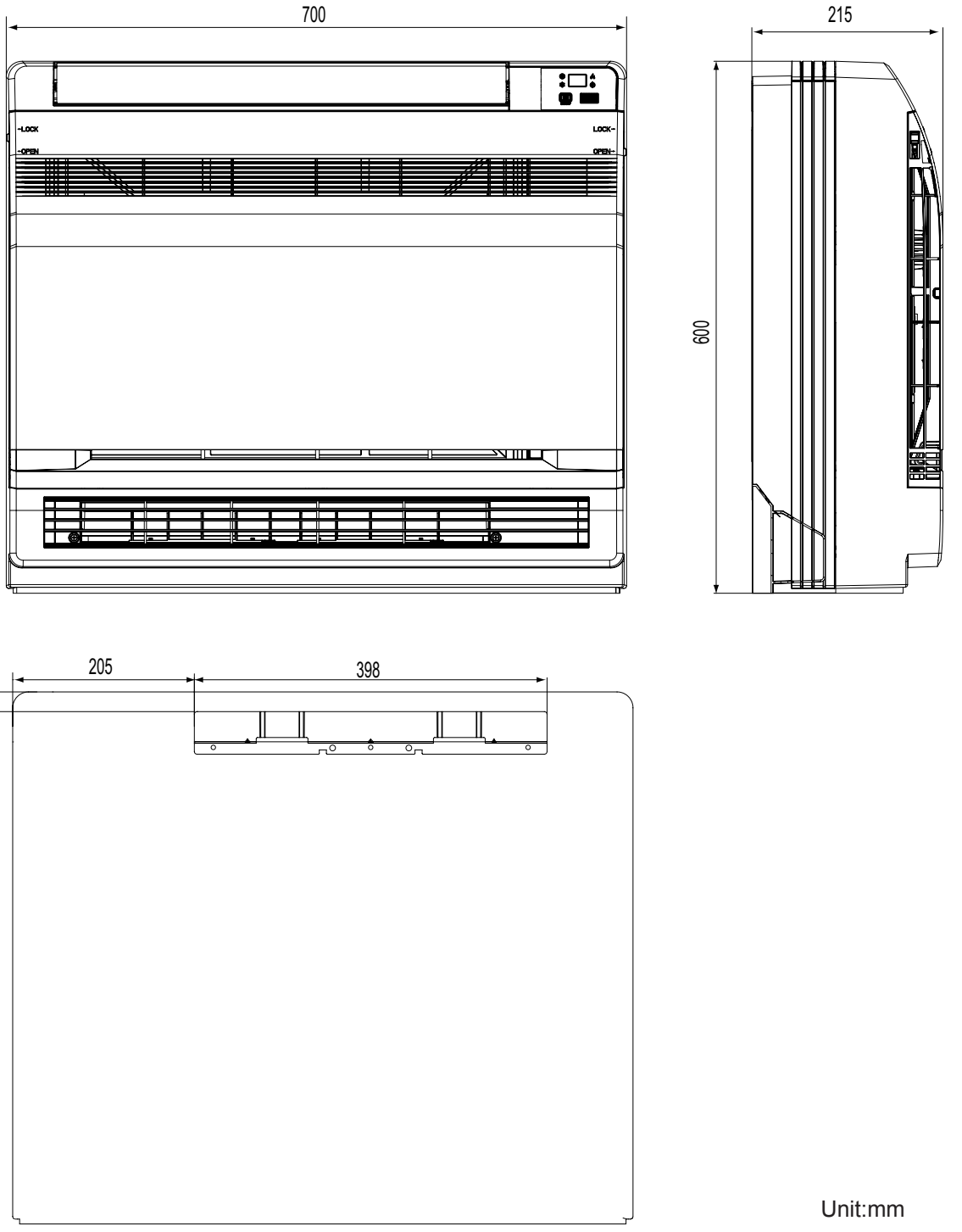

3.2 Outdoor Unit

ASP-12BI

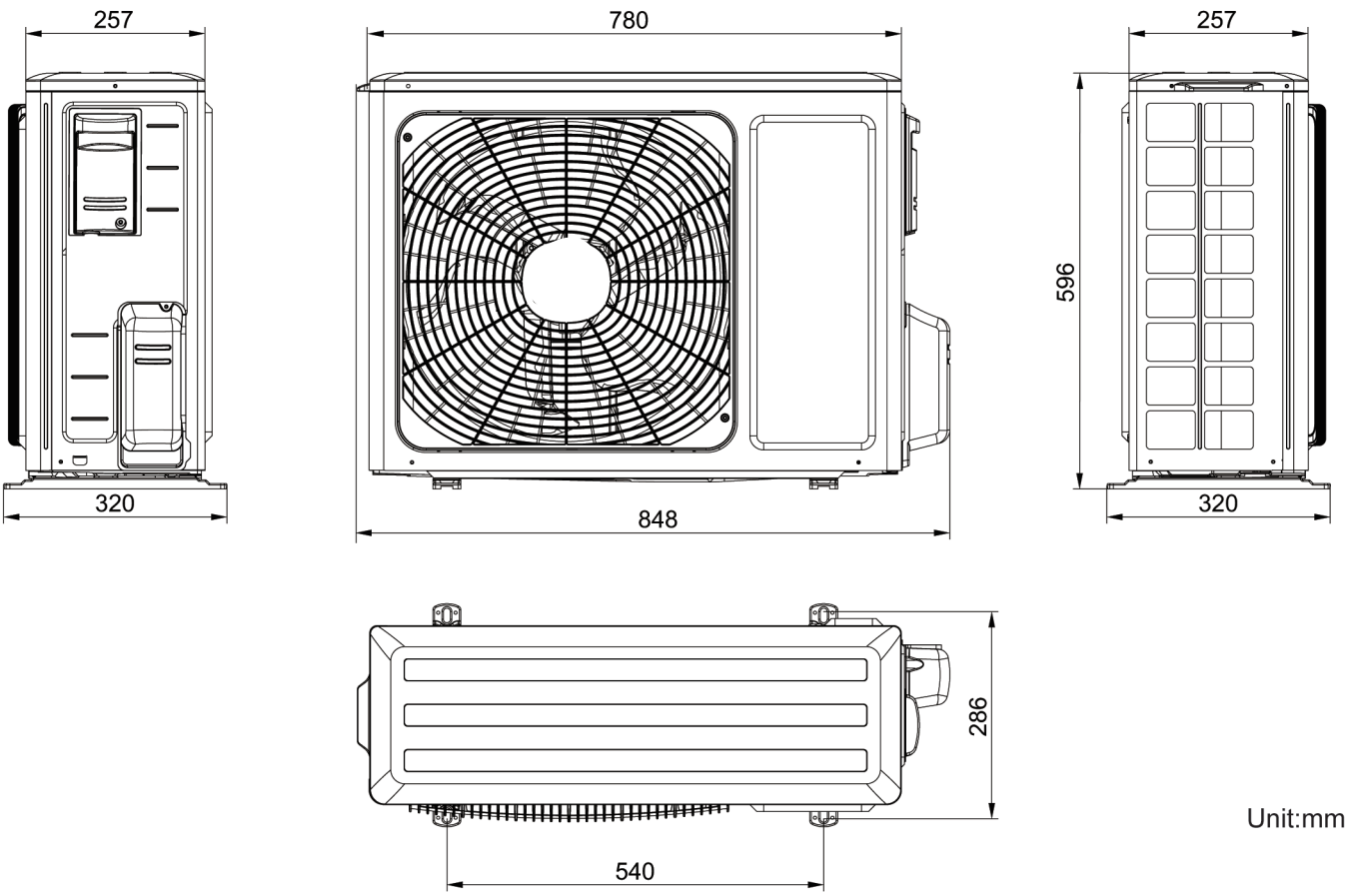

Unit:mm

ASP-09BI

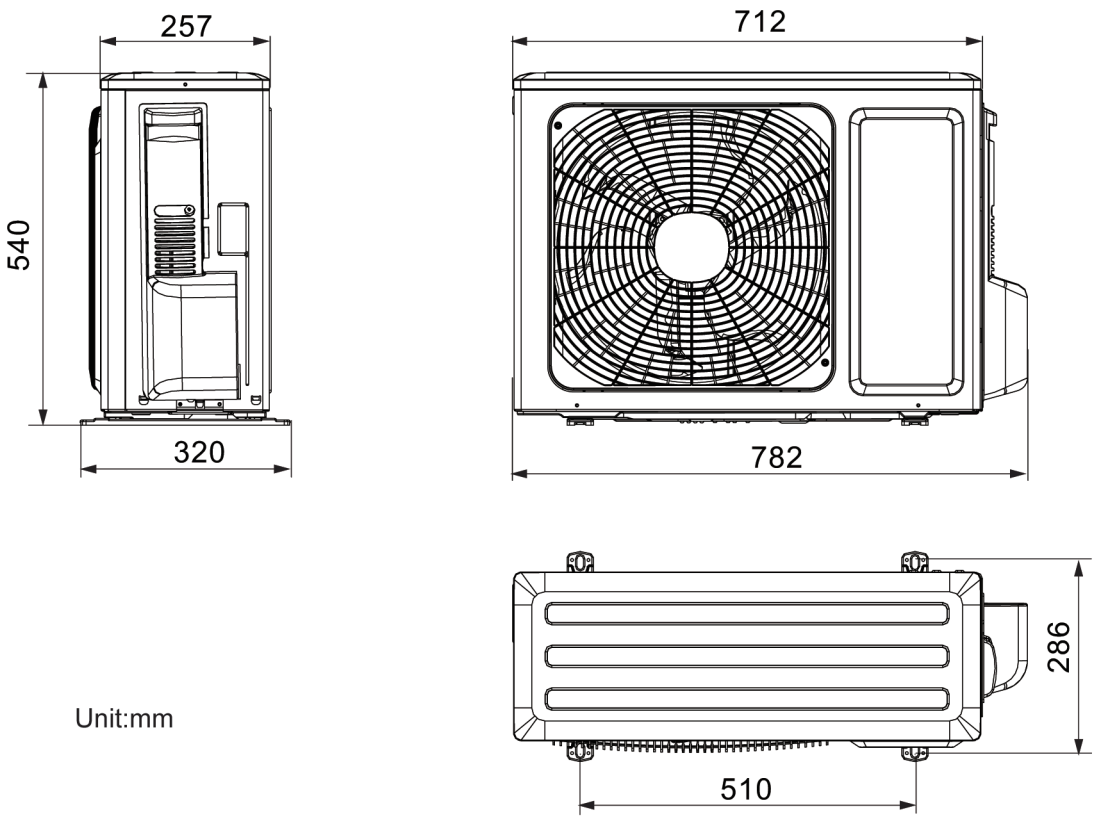

Unit:mm

Unit:mm

ASP-18BI

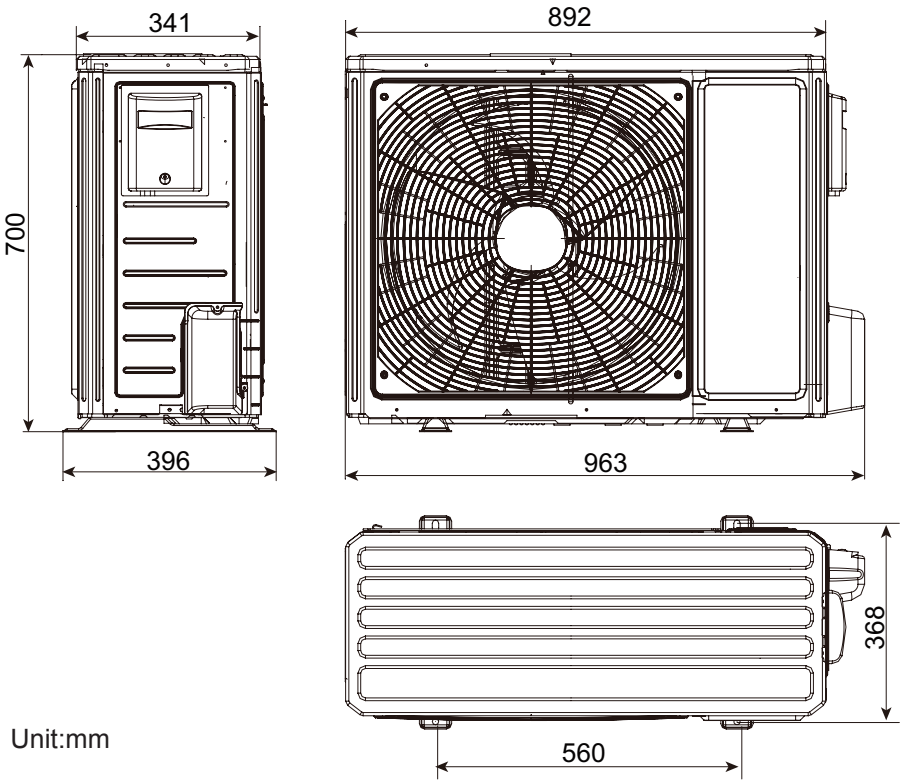

Unit:mm

4. Refrigerant System Diagram

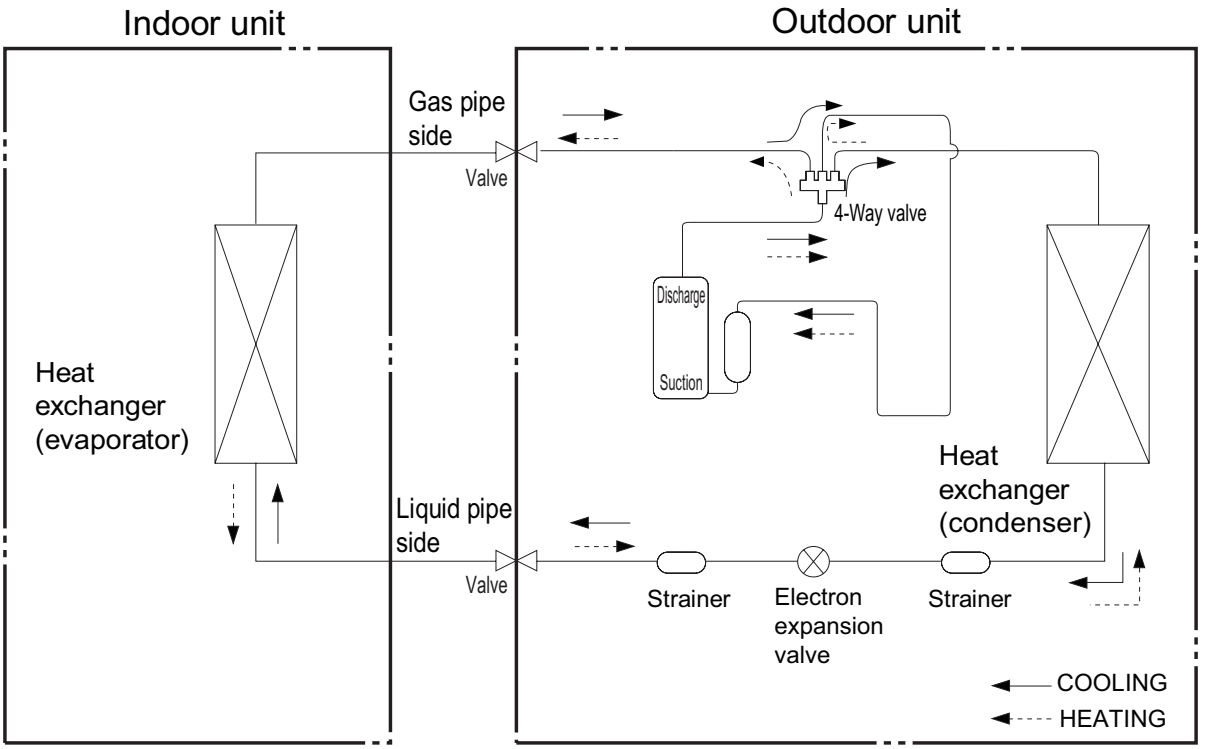

Connection pipe specification:
Liquid pipe:1/4" (6mm)
Gas pipe:3/8" (9.52mm)(09/12K)
Gas pipe:1/2" (16mm)(18K)

5. Electrical Part

5.1 Wiring Diagram

● Instruction

Symbol	Symbol Color	Symbol	Symbol Color	Symbol	Name
WH	White	GN	Green	CAP	Jumper cap
YE	Yellow	BN	Brown	COMP	Compressor
RD	Red	BU	Blue	⏚	Grounding wire
YEGN	Yellow/Green	BK	Black	/	/
VT	Violet	OG	Orange	/	/

Note: Jumper cap is used to determine fan speed and the swing angle of horizontal lover for this model.

● Indoor Unit

ASP-12BI, ASP-18BI

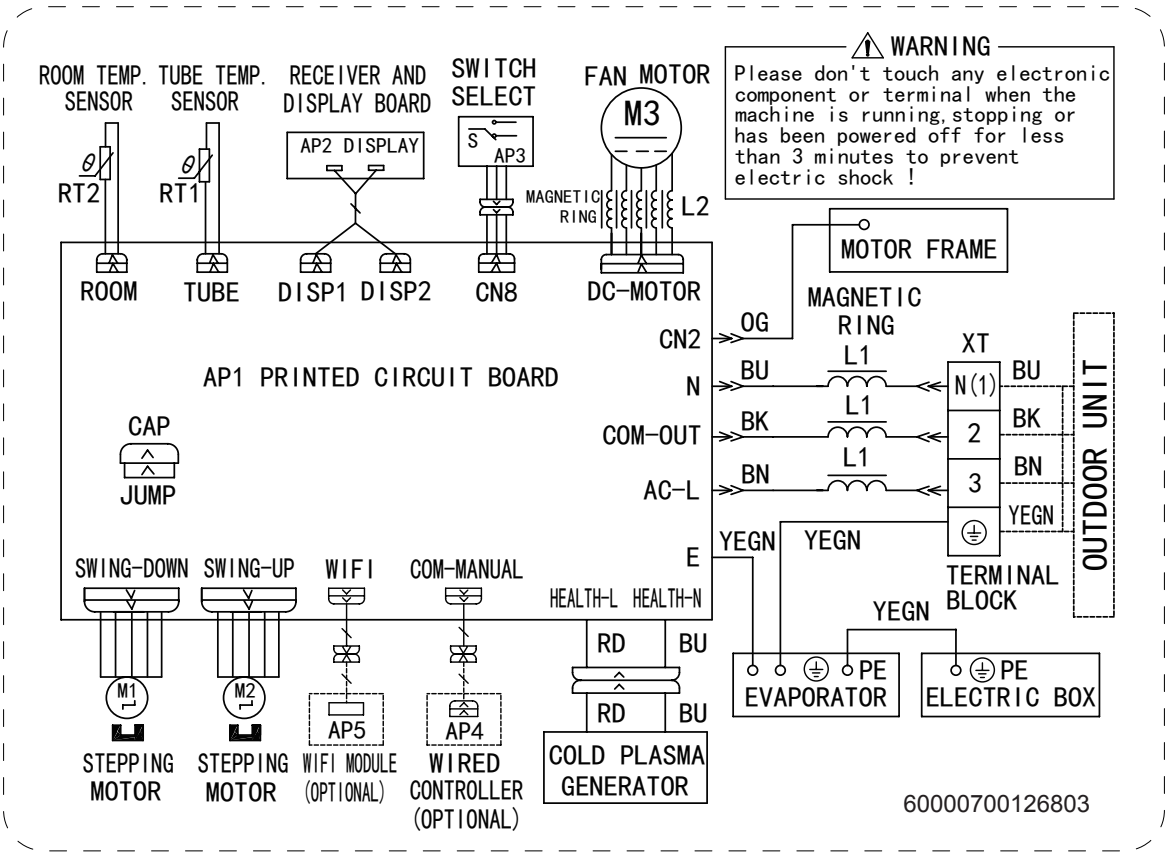

ASP-09BI

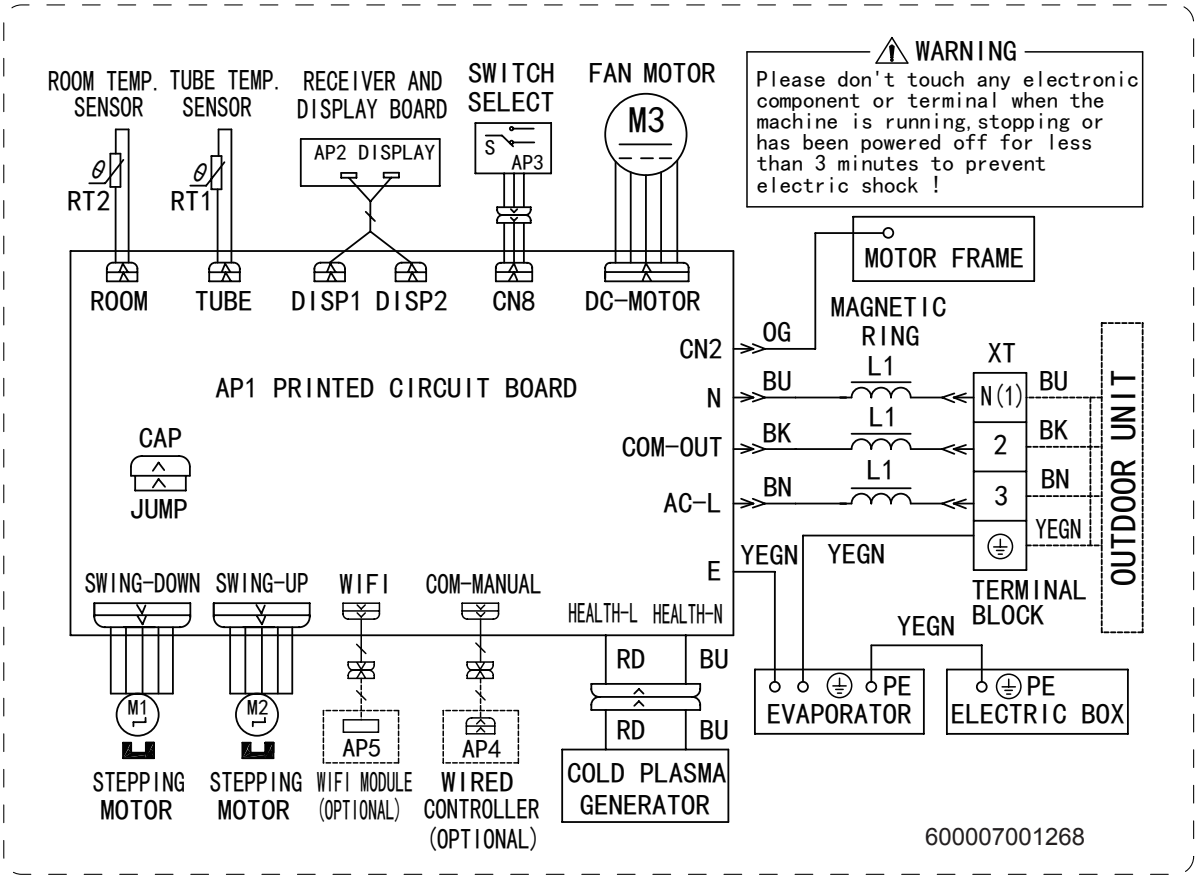

● Outdoor Unit

ASP-09BI

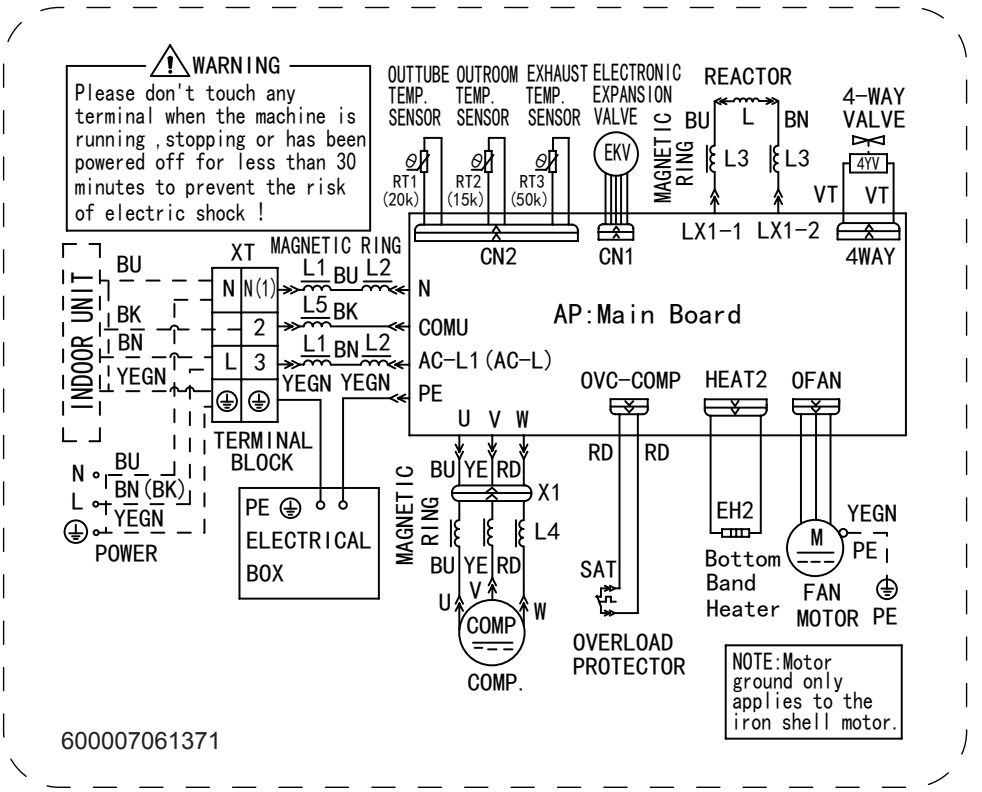

ASP-18BI

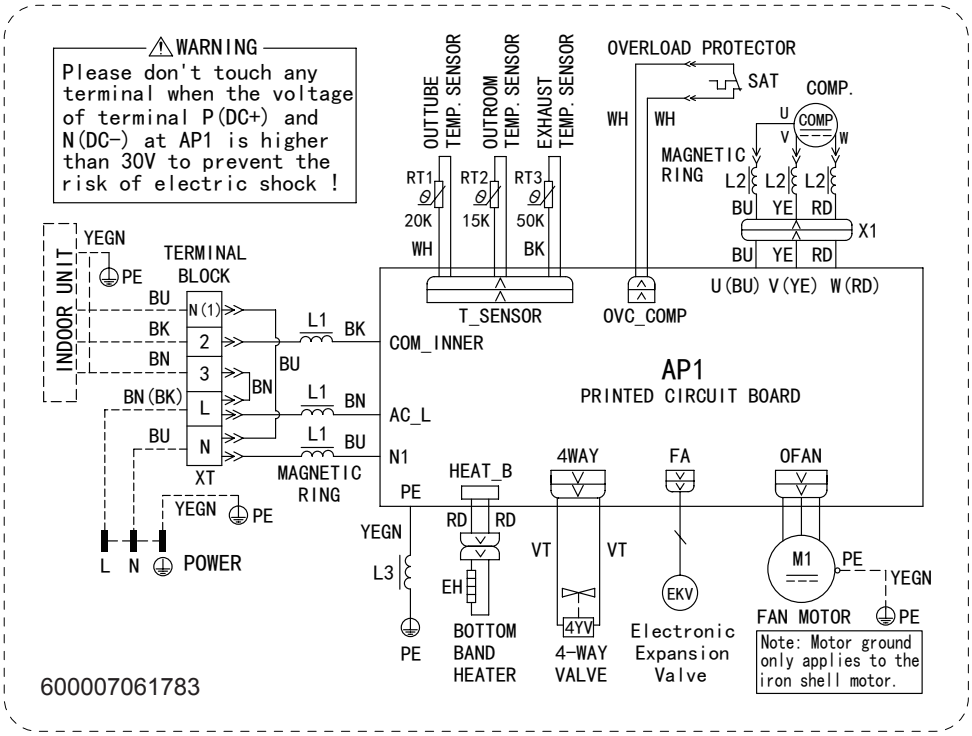

ASP-12BI

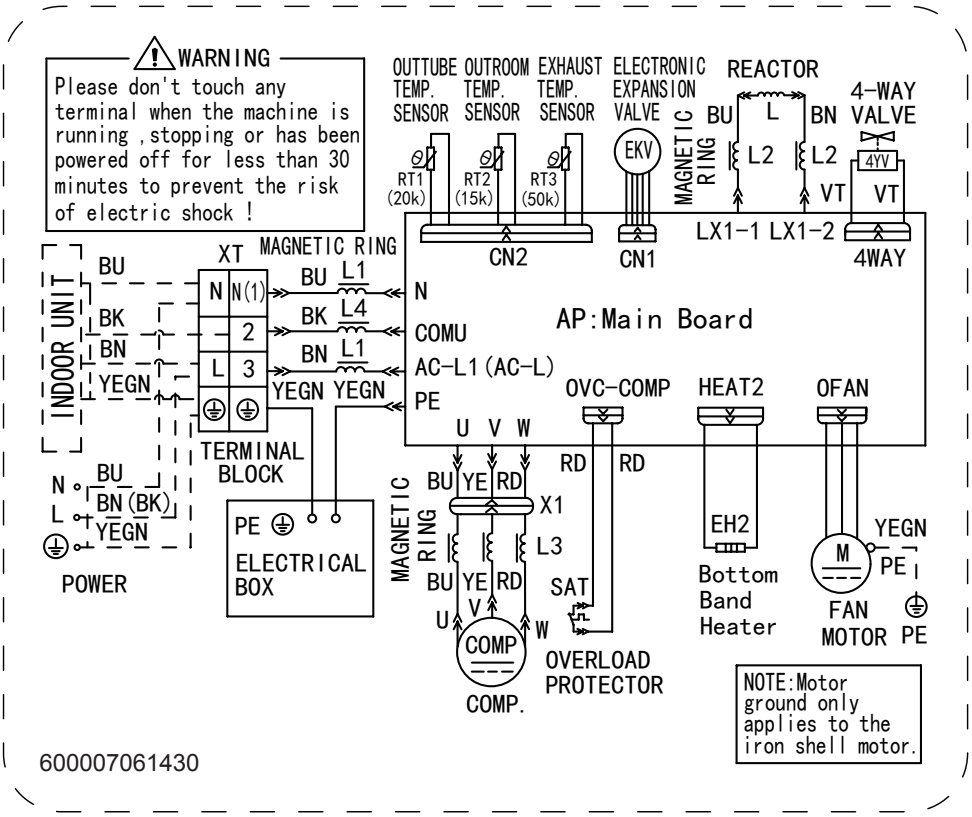

These circuit diagrams are subject to change without notice, please refer to the one supplied with the unit.

5.2 PCB Printed Diagram

Indoor Unit

● **Top view**

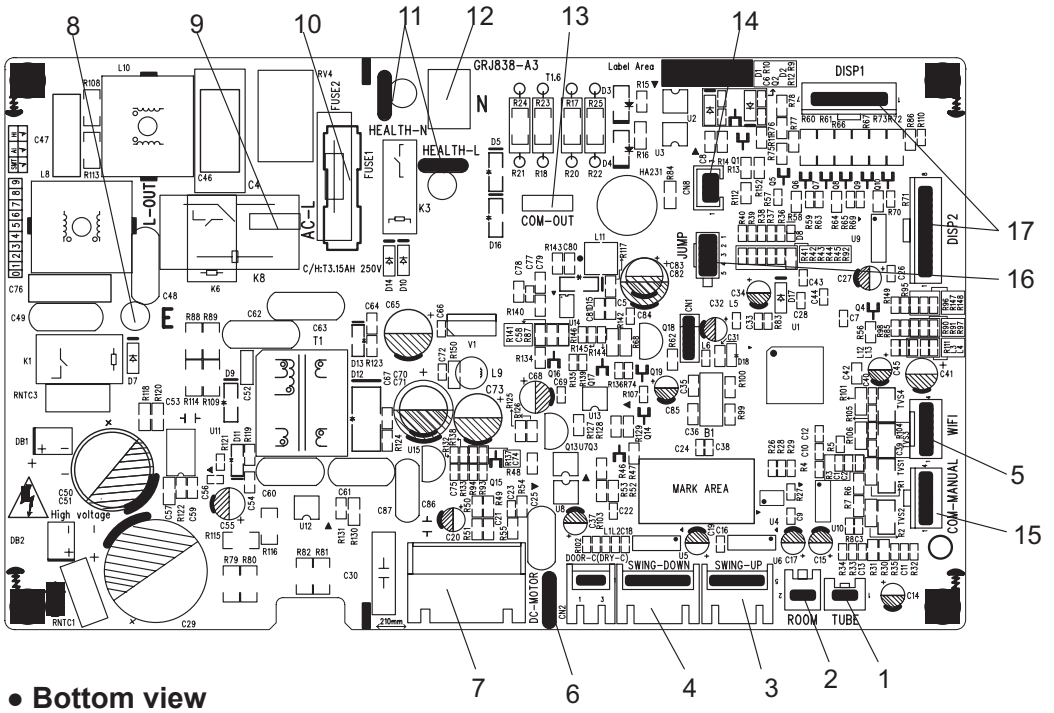

NO.	Name
1	Interface of tube temperature sensor
2	Interface of ambient temperature sensor
3	Up swing interface
4	Down swing interface
5	WIFI interface
6	Interface of EMC shielding wire
7	DC motor interface
8	Earthing wire of main board
9	Terminal of live wire
10	Fuse
11	Terminal for health function
12	Terminal of neutral wire
13	Communication interface between indoor unit and outdoor unit
14	Control interface of Down swing
15	Wired controlled interface
16	Needle stand of jumper cap
17	Interface of display board

● **Bottom view**

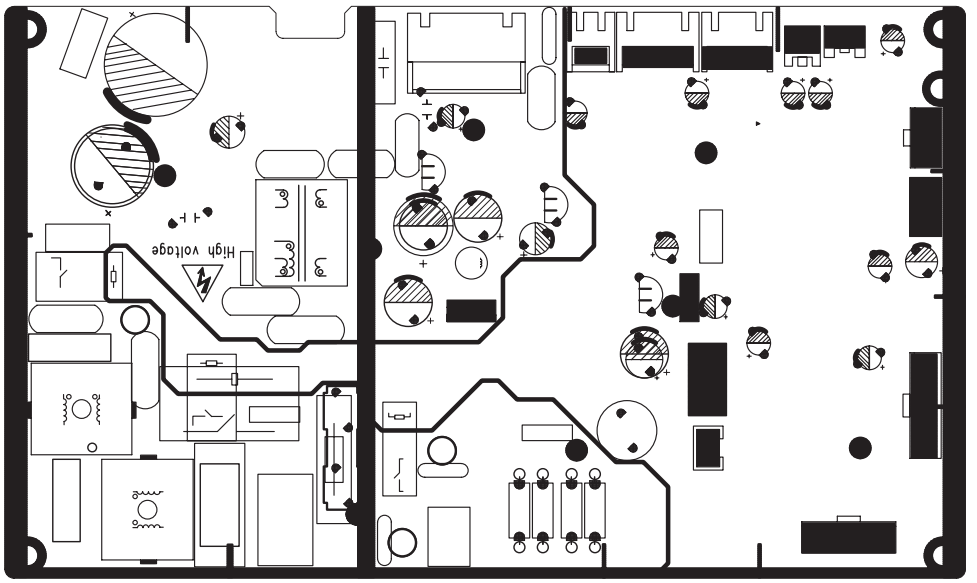

Outdoor Unit

09/12K

- **Top view**

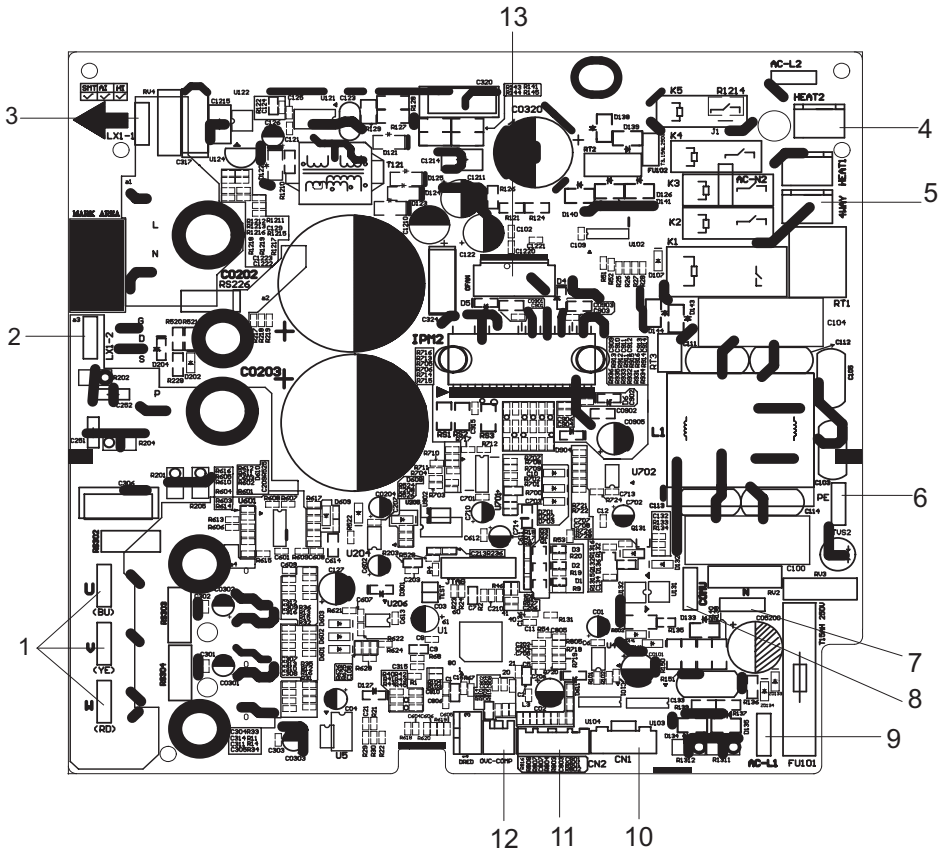

No.	Name
1	Interface of compressor wire
2	Reactor wiring terminal 2
3	Reactor wiring terminal 1
4	Terminal of chassis electric heater
5	4-way valve terminal
6	Grounding wire
7	Neutral wire
8	Communication wire
9	Live wire
10	Terminal of electronic expansion valve
11	Interface of temperature sensor
12	Overload interface of compressor
13	Terminal of outdoor fan

- **Bottom view**

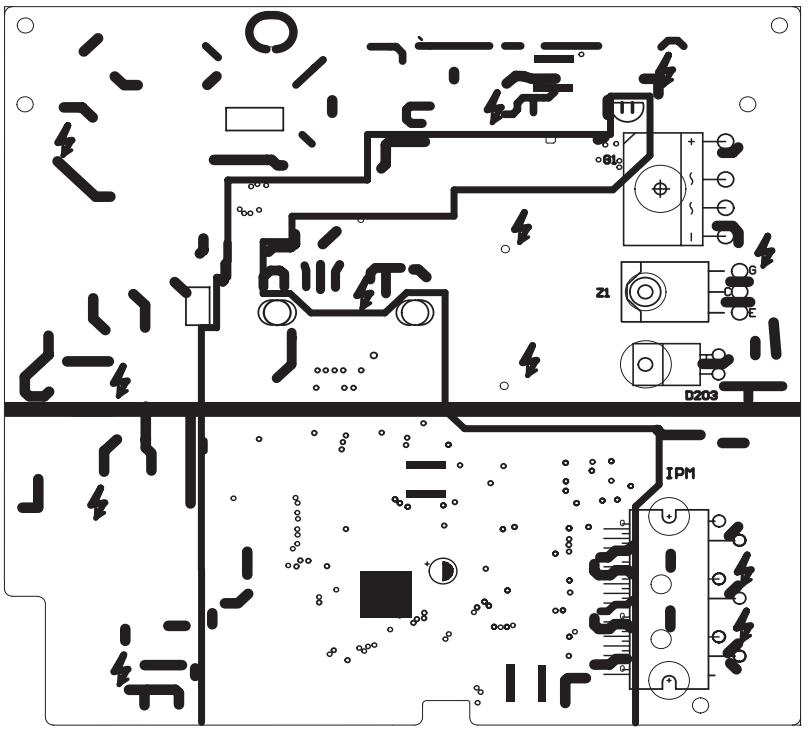

ASP-18BI

● **Top view**

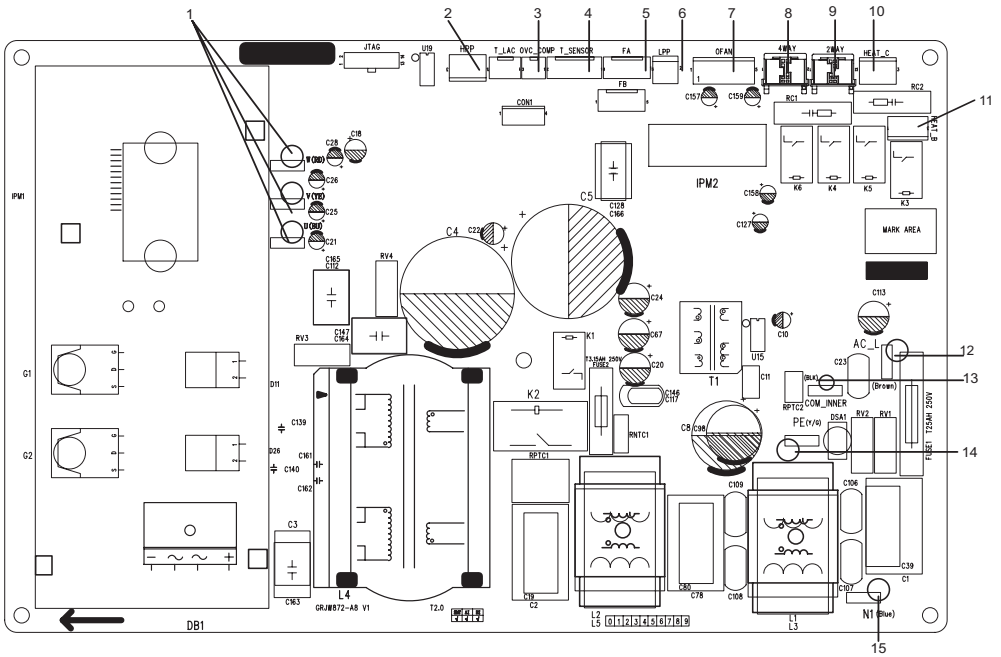

No	Name
1	Compressor wiring terminal for U V W
2	Terminal of system high pressure protection
3	Compressor overload protection terminal
4	Interface of temperature sensor
5	Terminal of electronic expansion valve
6	Terminal of system low pressure protection
7	Terminal of outdoor fan
8	4-way valve terminal
9	Terminal of compressor electric heater
10	Terminal of compressor electric heater
11	Interface of electric heating belt of chassis
12	Terminal of power supply live wire terminal
13	Interface of communication wire for indoor unit and outdoor unit
14	Terminal of power supply earthing wire
15	Terminal of power supply neutral wire

● **Bottom view**

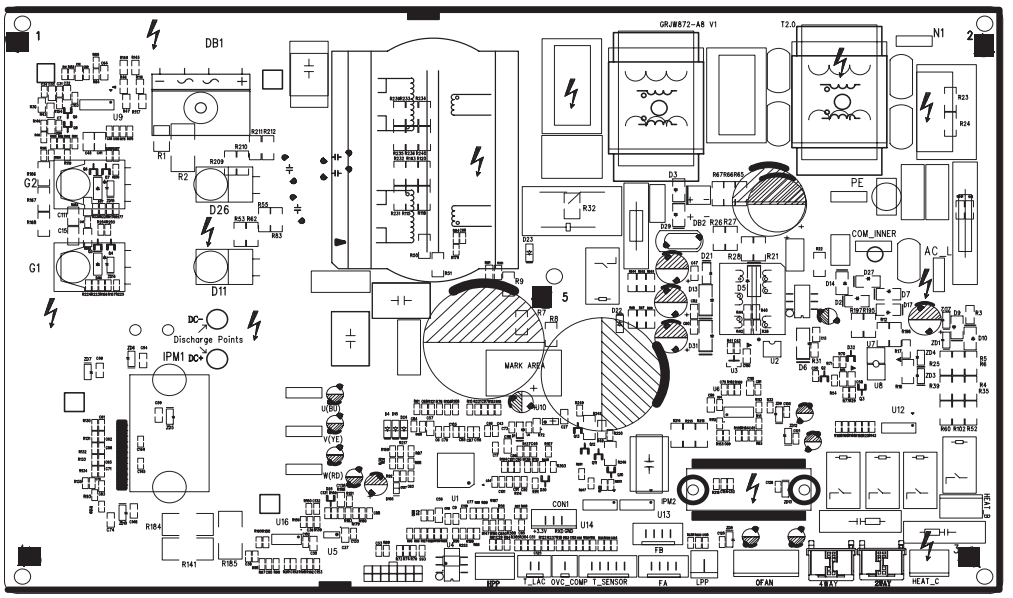

6. Function and Control

6.1 Remote Controller Introduction

Buttons on Remote Controller



1. ON/OFF button
2. +/- button
3. MODE button
4. FAN button
5. SWING button
6. I FEEL button
7. 🌲/🏠 button
8. SLEEP button
9. TEMP button
10. QUIET button
11. CLOCK button
12. T-ON/T-OFF button
13. TURBO button
14. WiFi button
15. LIGHT button

Introduction for Icons on Display Screen

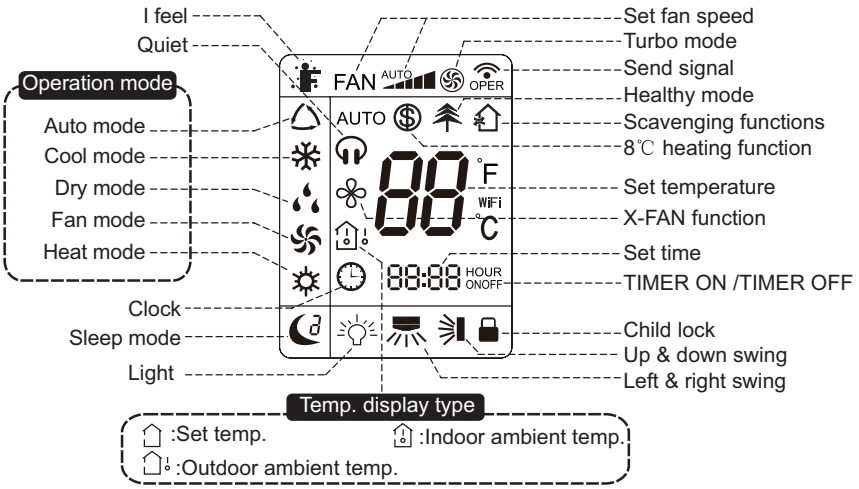

Introduction for Buttons on Remote Controller

Note:
This is a general use remote controller, it could be used for the air conditioners with multifunction; For some function, which the model doesn't have, if press the corresponding button on the remote controller that the unit will keep the original running status.

1 ON/OFF button

Press this button to turn on the unit. Press this button again to turn off the unit.

2 - button

Press this button to decrease set temperature. Holding it down above 2 seconds rapidly decreases set temperature. In AUTO mode, set temperature is not adjustable.

\+ button

Press this button to increase set temperature. Holding it down above 2 seconds rapidly increases set temperature. In AUTO mode, set temperature is not adjustable.

3 MODE button

Each time you press this button , a mode is selected in a sequence that goes from AUTO,COOL, DRY, FAN, and HEAT * , as the following:

AUTO ▶ COOL ▶ DRY ▶ FAN ▶ HEAT*

*Note:Only for models with heating function.

After energization, AUTO mode is defaulted. In AUTO mode, the set temperature will not be displayed on the LCD, and the unit will automatically select the suitable operation mode in accordance with the room temperature to make indoor room comfortable.(As for cooling only unit,it won't have any action when it receives the signal of heating operation.)

4 FAN button

This button is used for setting Fan Speed in the sequence that goes from AUTO, , , , to , then back to Auto.

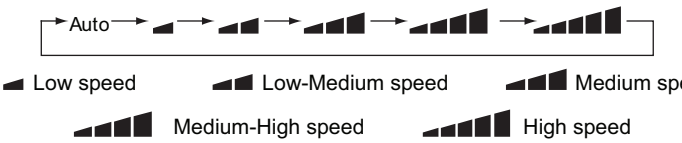

5 SWING button

Press this button to set up &down swing angle, which circularly changes as below:

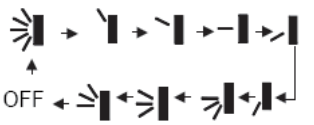

This remote controller is universal. If any command , or is sent out, the unit will carry out the command as indicates the guide louver swings as:



6 I FEEL button

Press this button to turn on I FEEL function. The unit automatically adjust temperature according to the sensed temperature. Press this button again to cancel I FEEL function.

7 /⌂ button

Press this button to achieve the on and off of healthy and scavenging functions in operation status. Press this button for the first time to start scavenging function; LCD displays "". Press the button for the second time to start healthy and scavenging functions simultaneously; LCD displays "" and "". Press this button for the third time to quit healthy and scavenging functions simultaneously. Press the button for the fourth time to start healthy function; LCD display "". Press this button again to repeat the operation above.

8 SLEEP button

- Press this button, can select Sleep 1 ( ), Sleep 2 ( ),Sleep 3 ( ) and cancel the Sleep,circulate between these, after electrified, Sleep Cancel is defaulted.
- Sleep 1 is Sleep mode 1, in Cool mode: after run for one hour in sleep mode, the main unit setting temperature will increase 1℃ , after 2 hours, the setting temperature will increase 2 ℃ , but the maximal setting temperature is 30 ℃ , then the unit will run at this setting temperature all along; In Heat mode: after run for one hour in sleep mode, the setting temperature will decrease 1 ℃ after 2 hours the setting temperature will decrease 2℃ , but the minimal setting temperature is 16℃ , then the unit will run at this setting temperature all along.
- Sleep 2 is sleep mode 2, that is air conditioner will run according to the presetting a group of sleep temperature curve.
- Sleep 3- the sleep curve setting under Sleep mode by DIY:

(1) Under Sleep 3 mode, press "Turbo" button for a long time, remote control enters into user individuation sleep setting status, at this time, the time of remote control will display "1hour ",the setting temperature "88" will display the corresponding temperature of last setting sleep curve and blink (The first entering will display according to the initial curve setting value of original factory);
(2) Adjust "+" and "-" button, could change the corresponding setting temperature, after adjusted, press "Trubo "button for confirmation;
(3) At this time, 1hour will be automatically increased at the timer postion on the remote control, (that are "2hours " or "3hours " or "8hours "), the place of setting temperature "88" will display the corresponding temperature of last setting sleep curve and blink;
(4) Repeat the above step (2) ～ (3) operation, until 8hours temperature setting finished,sleep,curve setting finished, at this time, the remote control will resume the original timer display;temperature display will resume to original setting temperature.
Sleep3- the sleep curve setting under Sleep mode by DIY could be inquired:

- The user could accord to sleep curve setting method to inquire the presetting sleep curve,enter into user individuation sleep setting status, but do not change the temperature, press "Turbo" button directly for confirmation.Note: In the above presetting or enquiry procedure,if continuously within10s, there is no button pressed, the sleep curve setting within 10s, there is no button pressed , the sleep curve setting status will be automatically quit and resume to display the original displaying. In the presetting or enquiry procedure, press "ON/OFF" button, "Mode" button, "Timer"button or "Sleep" button, the sleep curve setting or enquiry status will quit similarly.

9 TEMP button

Press this button, you can see indoor set temperature, indoor ambient temperature on indoor unit's display. The setting on remote controller is selected circularly as below:

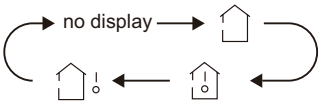

When selecting " " with remote controller or no display, temperature indicator on indoor unit displays set temperature; When selecting " " with remote controller, temperature indicator on indoor unit displays indoor ambie nt temperature; 5s later or within 5s it receives other remote control signal that will return to display the setting temperature.
Caution:

- This model hasn't outdoor ambient temperature display function. While remote controller can operate " " and indoor unit displays set temperature.
- It's defaulted to display set temperature when turning on the unit.
- Only for the models with temperature indicator on indoor unit.

10 QUIET button

Press this button, the Quiet status is under the Auto Quiet mode (display " Auto "signal)and Quiet mode (display " " singal) and Quiet OFF (there is no signal of " "displayed),after powered on, the Quiet OFF is defaulted. Note: the Quiet function cannot be set up in Fan and Dry mode;Under the Quiet mode (Display" " Under the Quiet mode) the fan speed is not available.

11 ClOCK button

Press CLOCK button,blinking. Within 5 seconds, pressing + or - button adjusts the present time. Holding down either button above 2 seconds increases or decreases the time by 1 minute every 0.5 second and then by 10 minutes every 0.5 second. During blinking after setting, press CLOCK button again to confirm the setting, and then will be constantly displayed.

12 T-ON / T-OFF button

Press T-ON button to initiate the auto-ON timer. To cancel the auto-timer program, simply press this button again.
After press of this button, disappears and "ON "blink s . 00:00 is displayed for ON time setting. Within 5 seconds, press + or - button to adjust the time value. Every press of either button changes the time setting by 1 minute. Holding down either button rapidly changes the time setting by 1 minute and then 10 minutes. Within 5 Seconds after setting, press TIMER ON button to confirm.
Press T-OFF button to initiate the auto-off timer. To cancel the auto-timer program, simply press the button again.TIMER OFF setting is the same as TIMER ON.

13 TURBO button

Press this button to activate / deactivate the Turbo function which enables the unit to reach the preset temperature in the shortest time. In COOL mode, the unit will blow strong cooling air at super high fan speed. In HEAT mode, the unit will blow strong heating air at super high fan speed.

14 WiFi button

Press " WiF "i button to turn on or turn off WiFi function. When WiFi function is turned on, the " W i F i " icon will be displayed on remote controller; Under status of unit off, press "MODE" and "W i F i " " buttons simultaneously for 1s, WiFi module will restore to factory default setting.

● This function is only available for some models.

15 LIGHT button

Press LIGHT button to turn on the display's light and press this button again to turn off the display 's light. If the light is turned on , is displayed. If the light is turned off, disappears.

If “H1” is displayed on the remote controller while it’s not operated by the professional person/after-sales person, it belongs to the misoperation.

Please operate it as below to cancel it.Under the OFF status of remote controller, hold the Mode button for 5s to cancel “H1” display.

Note:

● If remote controller displays “H1”, it belongs to the normal function reminder. If the unit is defrosting under heating mode, it operates according to H1 defrosting mode. “H1” won’t be displayed on the panel of indoor unit;

● Once you set H1 mode, if you turn off unit by remote controller, H1 will display 3 times on the remote controller and then disappear;

● Also, when you set H1 mode, when you change to heating mode, H1 will display 3 times on the remote controller and then disappear.

Combination of "+" and "-" buttons: About lock

Press "+" and "-" buttons simultaneously to lock or unlock the keypad. If the remote controller is locked, is displayed. In this case, pressing any button, blinks three times.

Combination of "MODE" and "-" buttons:About switch between Fahrenheit and centigrade

At unit OFF, press "MODE" and "-" buttons simultaneously to switch between °C and °F.

Combination of "TEMP" and "CLOCK" buttons:About Energy-saving Function

Press "TEMP" and "CLOCK" simultaneously in COOL mode to start energy-saving function.Nixie tube on the remote controller displays "SE". Repeat the operation to quit the function.

Combination of "TEMP" and "CLOCK" buttons:About 8°C Heating Function

Press "TEMP" and "CLOCK" simultaneously in HEAT mode to start 8°C Heating Function Nixie tube on the remote controller displays "" and a selected temperature of "8°C".(46°F if Fahrenheit is adopted). Repeat the operation to quit the function.

About Back-lighting Function

The unit lights for 4s when energizing for the first time, and 3s for later press.

Replacement of Batteries in Remote Controller

1.Press the back side of remote controller marked with“ OPEN ”as shown in the fig, and then push out the cover of battery box along the arrow direction.

2. Replace two 7# (AAA 1.5V) dry batteries, and make sure the position of “+” polar and “-“ polar are correct.

3. Reinstall the cover of battery box.

Note:

● During operation, point the remote control signal sender at the receiving window on indoor unit.

● The distance between signal sender and receiving window should be no more than 8m, and there should be no obstacles between them.

● Signal may be interfered easily in the room where there is fluorescent lamp or wireless telephone; remote controller should be close to indoor unit during operation.

● Replace new batteries of the same model when replacement is required.

● When you don’t use remote controller for a long time, please take out the batteries.

● If the display on remote controller is fuzzy or there’s no display, please replace batteries.

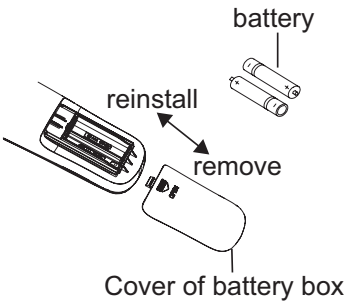

6.3 Ewpe Smart App Operation Manual

Control Flow Chart

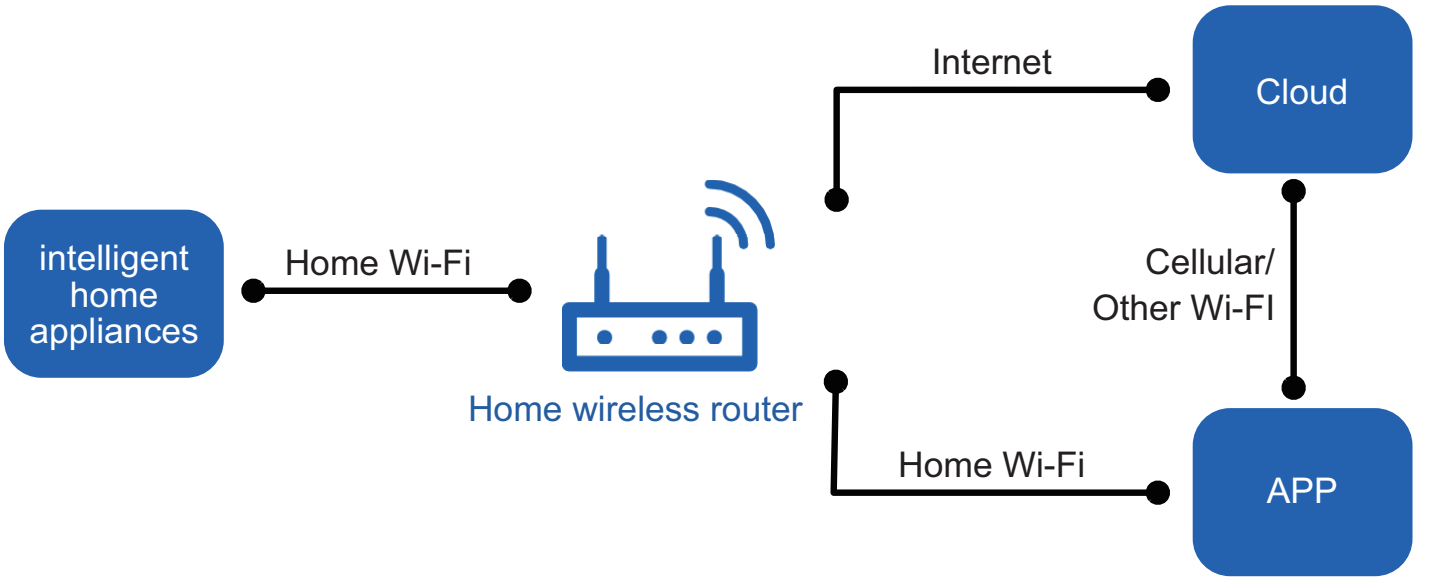

Operating Systems

Requirement for User's smart phone:

iOS system
Support iOS7.0 and above version

Android system
Support Android 4.4 and above version

Download and installation

App Download Linkage

Scan the QR code or search "Ewpe Smart" in the application market to download and install it. When "Ewpe Smart" App is installed, register the account and add the device to achieve long-distance control and LAN control of smart home appliances.
For more information, please refer to "Help" in App.

6.4 Brief Description of Modes and Functions

1. Cooling mode

(1) Under this mode, the fan and the up swing will operate at setting status. The temperature setting range is 16~30ºC.

(2) The unit is stopped because of malfunction of outdoor unit or protection. The indoor unit keeps original operation status and the error code is displayed.

(3) Indoor unit is stopped due to mode shock.

2. Drying mode

(1) Under this mode, the fan operates at low speed and the swing operates at setting status. The temperature setting range is 16~30ºC.

(2) The unit is stopped because of malfunction of outdoor unit or protection. The indoor unit keeps original operation status and the error code is displayed.

3. Heating mode

(1) Under this mode, the temperature setting range is 16~30ºC.

(2) Working condition and process for heating

When the unit is turned on under heating mode, the indoor unit turns to cold air prevention status. When the unit is turned off and the indoor unit has been started up before, the indoor unit blows the residual heat.

(3) Protection function: When the compressor is stopped due to malfunction under heating mode, the indoor unit blows the residual heat.

(4) Blow residual heat

When the unit stops operation as it reaches the temperature point, indoor unit will continue to run for 60s. The fan speed cant be switched during blowing residual heat period. The upper horizontal louver will turn to the defaulted position in cooling. When the unit operates under heating mode or auto heating mode, compressor will be turned on and the corresponding electric expansion valve is more than 65 and the unit stops operation during the operation status of indoor unit. The upper horizontal louver will turn to the defaulted position in heating mode. The indoor unit operates at low speed for 10s and then the unit stops operation.

(5) Defrosting, oil-returning

As it received the signal of defrosting and oil-returning from outdoor unit, the upper horizontal louver will turn to the minimum angle in cooling. 10s later, the in door fan stop operation. During defrosting and oil-returning process and they are quitted within 5mins, all malfunctions for indoor tube temperature sensor wont be detected.

4. Working process for AUTO mode (Mode judgment will be performed every 30s)

Under AUTO mode, standard cooling Tpreset=25ºC (77ºF), standard heating Tpreset=20ºC (68ºF), and standard fan Tpreset= 25ºC (77ºF).

(1) When Tamb≥26ºC (79ºF), the unit operation in cooling mode;

(2) Heating pump unit: When Tamb≤19ºC (66ºF), the unit operates in heating mode;

(3) Cooling only unit: Tamb≤19ºC (66ºF), the unit operates in fanmode;

(4) When 19ºC<Tindoor amb.<26ºC, if it turns to auto mode as the unit is turned on for the first time the unit will operates at auto fan mode. If it switch to auto mode from other modes, the unit will keep previous operation mode (when it turns to dry mode, the unit operates at auto fan mode).

(5) Protection function

Protection function is the same as that in cooling or heating mode.

5. Fan mode

Under fan mode, only indoor fan and swing operates. When it operates at auto fan speed, it will operate according to auto fan speed condition in cooling.

6. Mode shock

If the mode shock is 1 which is received by indoor unit from outdoor unit, the loads of indoor unit (indoor unit, auxiliary heating,swing) stop operation and the error code is displayed. The mode sent to outdoor unit is still remote control receiving mode. The unit will be turned off during mode shock.

If timer ON is reached, and the mode shock is 1 which is received by indoor unit from outdoor unit, the loads of indoor unit (indoor unit,auxiliary heating, swing) stop operation and the error code is displayed. The mode sent to outdoor unit is still remote control receiving mode.

7. Other control

7.1 Buzzer

Upon energization or availably operating the unit or remote controller, the buzzer will give out a beep.

7.2 Auto button

If this button is pressed, the unit will operate in AUTO mode and indoor fan will operate at auto speed; meanwhile, the swing motor operates. Press this button again to turn off the unit.

7.3 8 ºC heating function

Under heating mode, press TEMP+CLOCK buttons simultaneously. Under this mode, “cold air prevention protection” will be shielded.

7.4 I FEEL function

When I FEEL command is received, the controller will operate according to the ambient temperature sent by the remote controller (For defrosting and cold blow prevention, the unit operates according to the ambient temperature sensed by the air conditioner). The remote controller will send ambient temperature data to the controller every 10min. When the data has not been received after 11mins,the unit will operate according to the temperature sensed by the air conditioner. If I FEEL function is not selected, the ambient temperature will be that sensed by the air conditioner. I FEEL function will not to be memorized.

7.5 Timer function

General timer and clock timer functions are compatible by equipping remote controller with different functions.

(1)General Timer

Timer ON can be set at unit OFF. If selected ON time is reached, the unit will start to operate according to previous setting status. Time setting range is 0.5-24hr in 30-minute increments.

Timer OFF can be set at unit ON. If selected OFF time is reached, the unit will stop operation. Time setting range is 0.5-24hr in 30-minute increments.

(2)Clock Timer

Timer ON

If timer ON is set during operation of the unit, the unit will continue to operate. If timer ON is set at unit OFF, upon ON time reaches the unit will start to operate according to previous setting status.

Timer OFF

If timer OFF is set at unit OFF, the system will keep standby status. If timer OFF is set at unit ON, upon OFF time reaches the unit will stop operation.

Timer Change

Although timer has been set, the unit still can be turned on/off by pressing ON/OFF button of remote controller. You can also set the timer once again, and then the unit will operate according to the last setting. If timer ON and timer OFF are set at the same time during operation of the unit, the unit will keep operating at current status till OFF time reaches. If timer ON and timer OFF are set at the same time at unit OFF, the unit will keep stop till ON time reaches. In the future's every day, the system will operate according to presetting mode till OFF.

7.6 Sleep function

This mode is only valid in cooling and heating modes. The unit will select proper sleep curve to operate according to different set temperature.

7.7 Compulsory defrosting function

When the unit is turned on in heating by remote controller and the set temperature is 16°C, press "+,-,+,-,+,-"continuously within 5s, the indoor unit turns to compulsory defrosting setting and it will send compulsory defrosting mode to outdoor unit.

When indoor unit received the compulsory defrosting signal from outdoor unit, the indoor unit will quit from the compulsory defrosting setting and it will cancel to send compulsory defrosting mode to outdoor unit.

7.8 Refrigerant recovery function

Turn to Freon recovery mode: After the unit is energized for 5min, and the unit is turned on at 16ºC under cooling mode, press light button on remote controller for 3 times successively within 3s to turn to Freon recovery mode. Fo is displayed and it will send Freon recovery mode to outdoor unit.

Quit from Freon recovery mode:After it turns to Freon mode, if it receives any signal from remote controller or it turns to Freon recovery mode for 25 mins, it will quit from Freon recovery mode.

Turn to the action for Freon recovery mode: indoor unit will be turned on in cooling mode. The fan speed is super-high fan speed and the set temperature is 16°C. The horizontal louver will turn to the minimum operation angle.

Quit the action for Freon recovery mode: The indoor fan operates at the previous set status by remote controller.

7.9 Pilot run function

When the set temperature is 30°C under cooling mode, press "+,-,+,-,+,-"continuously within 5s, the indoor unit turns to pilot run setting mode and it will send pilot run mode to outdoor unit.

Pilot run mode: it operates under cooling mode and "dd" is displayed.

Quit the pilot run mode and indoor unit cancels "dd" display. If it receives "wrong wire connection of malfunction of expansion valve" from outdoor unit, "dn" will be displayed.

Part Ⅱ : Installation and Maintenance

7. Notes for Installation and Maintenance

Safety Precautions: Important!

Please read the safety precautions carefully before installation and maintenance.
The following contents are very important for installation and maintenance.

Please follow the instructions below.

●The installation or maintenance must accord with the instructions.
●Comply with all national electrical codes and local electrical codes.
●Pay attention to the warnings and cautions in this manual.
●All installation and maintenance shall be performed by distributor or qualified person.
●All electric work must be performed by a licensed technician according to local regulations and the instructions given in this manual.
●Be caution during installation and maintenance. Prohibit incorrect operation to prevent electric shock, casualty and other accidents.



Warnings

Electrical Safety Precautions:

1. Cut off the power supply of air conditioner before checking and maintenance.
2. The air condition must apply specialized circuit and prohibit share the same circuit with other appliances.
3. The air conditioner should be installed in suitable location and ensure the power plug is touchable.
4. Make sure each wiring terminal is connected firmly during installation and maintenance.
5. Have the unit adequately grounded. The grounding wire cant be used for other purposes.
6. Must apply protective accessories such as protective boards, cable-cross loop and wire clip.
7. The live wire, neutral wire and grounding wire of power supply must be corresponding to the live wire, neutral wire and grounding wire of the air conditioner.
8. The power cord and power connection wires cant be pressed by hard objects.
9. If power cord or connection wire is broken, it must be replaced by a qualified person.
10. If the power cord or connection wire is not long enough, please get the specialized power cord or connection wire from the manufacture or distributor. Prohibit prolong the wire by yourself.
11. For the air conditioner without plug, an air switch must be installed in the circuit. The air switch should be all-pole parting and the contact parting distance should be more than 3mm.
12. Make sure all wires and pipes are connected properly and the valves are opened before energizing.
13. Check if there is electric leakage on the unit body. If yes, please eliminate the electric leakage.
14. Replace the fuse with a new one of the same specification if it is burnt down; dont replace it with a cooper wire or conducting wire.
15. If the unit is to be installed in a humid place, the circuit breaker must be installed.

Installation Safety Precautions:

1. Select the installation location according to the requirement of this manual.(See the requirements in installation part)
2. Handle unit transportation with care; the unit should not be carried by only one person if it is more than 20kg.
3. When installing the indoor unit and outdoor unit, a sufficient fixing bolt must be installed; make sure the installation support is firm.
4. Ware safety belt if the height of working is above 2m.
5. Use equipped components or appointed components during installation.
6. Make sure no foreign objects are left in the unit after finishing installation.

Improper installation may lead to fire hazard, explosion, electric shock or injury.

Safety Precautions for Installing and Relocating the Unit:

To ensure safety, please be mindful of the following precautions.

Warnings

1. When installing or relocating the unit, be sure to keep the refrigerant circuit free from air or substances other than the specified refrigerant.
Any presence of air or other foreign substance in the refrigerant circuit will cause system pressure rise or compressor rupture, resulting in injury.
2.When installing or moving this unit, do not charge the refrigerant which is not comply with that on the nameplate or unqualified refrigerant.
Otherwise, it may cause abnormal operation, wrong action, mechanical malfunction or even series safety accident.
3.When refrigerant needs to be recovered during relocating or repairing the unit, be sure that the unit is running in cooling mode.Then, fully close the valve at high pressure side (liquid valve).About 30-40 seconds later, fully close the valve at low pressure side (gas valve), immediately stop the unit and disconnect power. Please note that the time for refrigerant recovery should not exceed 1 minute.
If refrigerant recovery takes too much time, air may be sucked in and cause pressure rise or compressor rupture, resulting in injury.
4.During refrigerant recovery, make sure that liquid valve and gas valve are fully closed and power is disconnected before detaching the connection pipe.
If compressor starts running when stop valve is open and connection pipe is not yet connected, air will be sucked in and cause pressure rise or compressor rupture, resulting in injury.
5.When installing the unit, make sure that connection pipe is securely connected before the compressor starts running.
If compressor starts running when stop valve is open and connection pipe is not yet connected, air will be sucked in and cause pressure rise or compressor rupture, resulting in injury.
6.Prohibit installing the unit at the place where there may be leaked corrosive gas or flammable gas.
If there leaked gas around the unit, it may cause explosion and other accidents.
7.Do not use extension cords for electrical connections. If the electric wire is not long enough, please contact a local service center authorized and ask for a proper electric wire.
Poor connections may lead to electric shock or fire.
8.Use the specified types of wires for electrical connections between the indoor and outdoor units. Firmly clamp the wires so that their terminals receive no external stresses.
Electric wires with insufficient capacity, wrong wire connections and insecure wire terminals may cause electric shock or fire.

Safety Precautions for Refrigerant

●To realize the function of the air conditioner unit, a special refrigerant circulates in the system. The used refrigerant is the fluoride R32,which is specially cleaned. The refrigerant is flammable and inodorous. Furthermore, it can leads to explosion under certain conditions. But the flammability of the refrigerant is very low. It can be ignited only by fire.
●Compared to common refrigerants, R32 is a nonpolluting refrigerant with no harm to the ozonosphere. The influence upon the greenhouse effect is also lower. R32 has got very good thermodynamic features which lead to a really high energy efficiency. The units therefore need a less filling.

WARNING:

●Do not use means to accelerate the defrosting process or to clean, other than those recommended by the manufacture. Should repair be necessary,contact your nearest authorized Service Centre. Any repairs carried out by unqualified personnel may be dangerous. The appliance shall be stored in a room without continuously operating ignition sources. (for example:open flames , an operating gas appliance or an operating electric heater.)
●Do not pierce or burn.
●Appliance shall be installed, operated and stored in a room with a floor area larger than "X"m^2 (see table a).(only applies to appliances that are not fixed appliances).
●Appliance filled with flammable gas R32. For repairs, strictly follow manufacturer's instructions only.Be aware that refrigrants not contain odour.
●Read specialists manual.


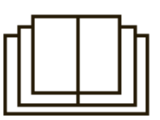



Safety Operation of Flammable Refrigerant

Qualification requirement for installation and maintenance man

●All the work men who are engaging in the refrigeration system should bear the valid certification awarded by the authoritative organization and the qualification for dealing with the refrigeration system recognized by this industry. If it needs other technician to maintain and repair the appliance, they should be supervised by the person who bears the qualification for using the flammable refrigerant.
●It can only be repaired by the method suggested by the equipments manufacturer.

Installation notes

●The air conditioner is not allowed to use in a room that has running fire (such as fire source,working coal gas ware, operating heater).
●It is not allowed to drill hole or burn the connection pipe.
●The air conditioner must be installed in a room that is larger than the minimum room area.
The minimum room area is shown on the nameplate or following table a.
●Leak test is a must after installation.

table a - Minimum room area(m^2)

Minimum room area(m^2)	Charge amount (kg)	≤1.2	1.3	1.4	1.5	1.6	1.7	1.8	1.9	2	2.1	2.2	2.3	2.4	2.5
	floor location	4	14.5	16.8	19.3	22	24.8	27.8	31	34.3	37.8	41.5	45.4	49.4	53.6
	window mounted	4	5.2	6.1	7	7.9	8.9	10	11.2	12.4	13.6	15	16.3	17.8	19.3
	wall mounted	4	4	4	4	4	4	4	4	4	4.2	4.6	5	5.5	6
	ceiling mounted	4	4	4	4	4	4	4	4	4	4	4	4	4	4

Maintenance notes

●Check whether the maintenance area or the room area meet the requirement of the nameplate.
— Its only allowed to be operated in the rooms that meet the requirement of the nameplate.
●Check whether the maintenance area is well-ventilated.
— The continuous ventilation status should be kept during the operation process.
●Check whether there is fire source or potential fire source in the maintenance area.
— The naked flame is prohibited in the maintenance area; and the “no smoking” warning board should be hanged.
●Check whether the appliance mark is in good condition.
— Replace the vague or damaged warning mark.

Welding

●If you should cut or weld the refrigerant system pipes in the process of maintaining, please follow the steps as below:
a. Shut down the unit and cut power supply
b. Eliminate the refrigerant
c. Vacuuming
d. Clean it with N2 gas
e. Cutting or welding
f. Carry back to the service spot for welding
●Make sure that there isnt any naked flame near the outlet of the vacuum pump and its well-ventilated.
●The refrigerant should be recycled into the specialized storage tank.

Filling the refrigerant

●Use the refrigerant filling appliances specialized for R32. Make sure that different kinds of refrigerant wont contaminate with each other.
●The refrigerant tank should be kept upright at the time of filling refrigerant.
●Stick the label on the system after filling is finished (or havent finished).
●Dont overfilling.
●After filling is finished, please do the leakage detection before test running; another time of leak detection should be done when its removed.

Safety instructions for transportation and storage

●Please use the flammable gas detector to check before unload and open the container.
●No fire source and smoking.
●According to the local rules and laws.

Main Tools for Installation and Maintenance

1. Level meter, measuring tape 	2. Screw driver 	3. Impact drill, drill head, electric drill 
4. Electroprobe 	5. Universal meter 	6. Torque wrench, open-end wrench, inner hexagon spanner 
7. Electronic leakage detector 	8. Vacuum pump 	9. Pressure meter 
10. Pipe pliers, pipe cutter   	11. Pipe expander, pipe bender  	12. Soldering appliance, refrigerant container  

8. Installation

8.1 Requirements for Electric Connection

1. Safety Precaution

(1) Must follow the electric safety regulations when installing the unit.
(2) If the supply cord is damaged, it must be replaced by the manufacturer or its service agent or a similarly qualified person in order to (avoid a hazard.
(3) According to the local safety regulations, use qualified power supply circuit and air switch.
(4) A air switch having a contact separation of at least 3mm in all poles should be fixed in fixed wiring.
(5) The appliance shall be installed in accordance with national wiring regulation.
(6) The air switch must have the functions of magnetic tripping and heat tripping in order to prevent short circuit or overload. Please install the air switch with suitable capacity according to the sheet below.
(7) Make sure the power supply matches with the requirement of air conditioner.Unstable power supply or incorrect wiring may result in electric shock, fire hazard or malfunction. Please install proper power supply cables before using the air conditioner.
(8) Properly connect the live wire, neutral wire and grounding wire of power socket.
(9) Be sure to cut off the power supply before proceeding any work related to electric safety.
(10) Do not put through the power before finishing installation.

2. Grounding Requirement

(1) The air conditioner is first class electric appliance. It must be properly grounded with specialized grounding device by a professional. Please make sure it is always grounded effectively, otherwise it may cause electric shock.
(2) The yellow-green wire in air conditioner is grounding wire, which can't be used for other purposes.
(3) The grounding resistance should comply with national electric safety regulations.

Air-Conditioner	Air Switch Capacity
09K	10A
12/18K	13/16A

8.2 Installation of indoor unit

1. Selection of Installation Location

(1) Such a place where cool air can be distributed throughout the room.
(2) Such a place where condensation water is easily drained out.
(3) Such a place that can handle the weight of indoor unit.
(4) Such a place which has easy access for maintenance.
(5) The appliance shall not be installed in the laundry.

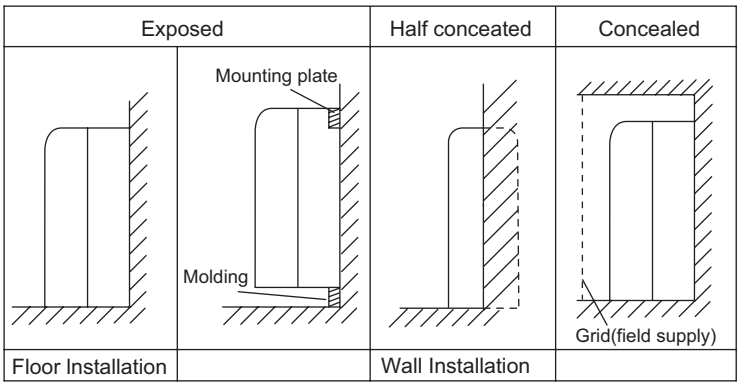

There are 2 styles of installation

● Ceiling type ● Floor type

Each type is similar to the other as follows:

The indoor unit should be sited in a place where:
(1) The restrictions on installation specified in the indoor unit installation drawings are met.
(2) Both air intake and exhaust have clear paths met.
(3) The unit is not in the path of direct sunlight.
(4) The unit is away from the source of heat or steam.
(5) There is no source of machine oil vapour (this may shorten indoor unit life).
(6) Cool(warm) air is circulated throughout the room.
(7) The unit is away from electronic ignition type fluorwscent lamps (inverter or rapid stert type) as they may shorten the remote controller range.
(8) The unit is at least 1 metre away from any television or radio set(unit may cause interference with the picture or sound).

Location for securing the installation panel.

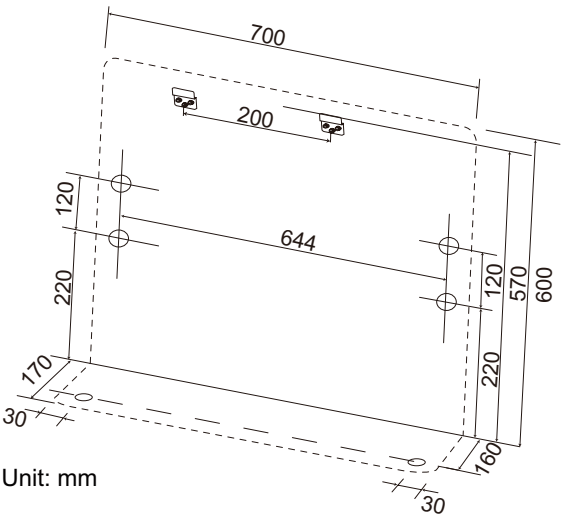

Unit: mm

Cautions for installation where air conditioner troubleis liable tooccur.

Where there is toomuch of oil area.
Where it is acid base area.
Where there is irregular electrical supply.

Schematic drawing of hooks:

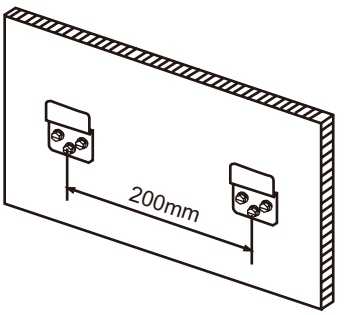

2. Indoor Unit Installation Drawings

The indoor unit may be mounted in any of the three styles shown here.

Console unit shall be installed on the ground or the position where is 0.3m from the floor.

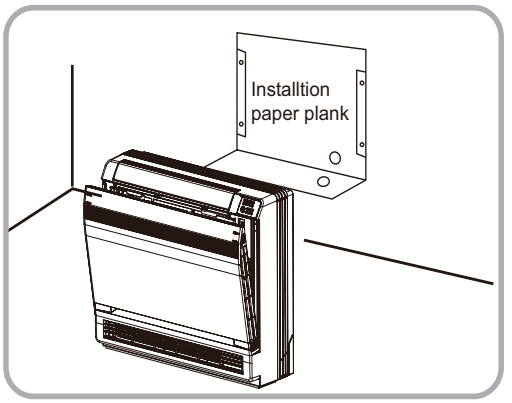

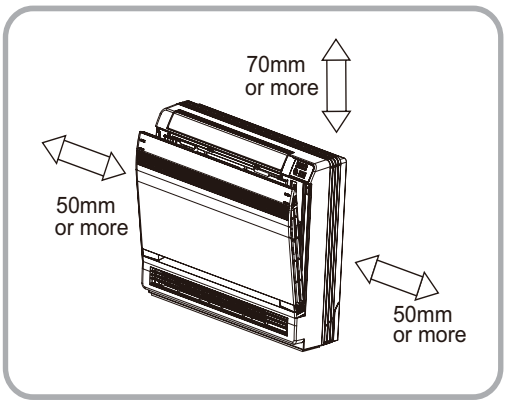

3. Refrigerant Piping

(1) Drill a hole (65mm in diameter) in the spot indicated by the symbol in the illustration ad below .
(2) The location of the hole is different depending on which side of the pipe is taken out .
(3) For piping ,see6.Connecting the refrigerant pipe , under Indoor Unit Installation.
(4) Allow space around the pipe for a easier indoor unit pipe connection.

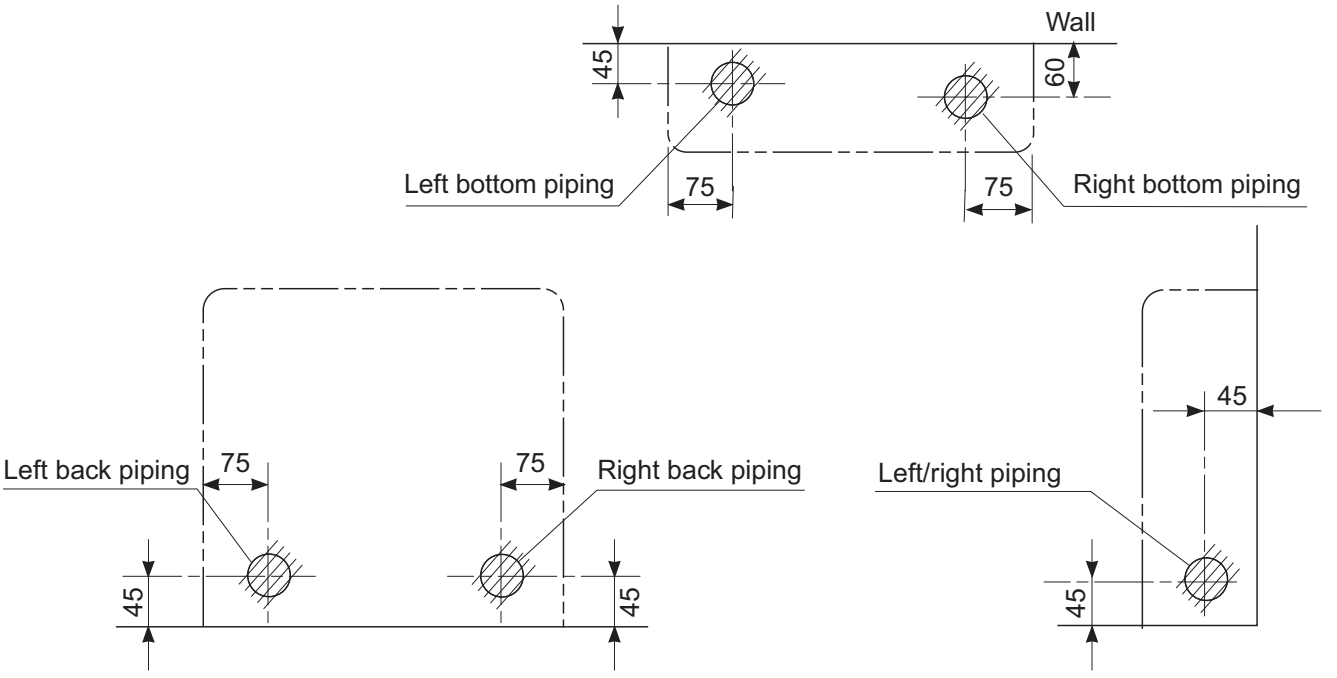

Unit: mm

⚠ CAUTION

Min.allowable length

●The suggested shortest pipe length is 2.5m,in order to avoid noise from the outdoor unit and vibration. (Mechanical noise and vibration may occur depending on how the unit is installed and the environment in which it is used.)

●See the installation manual for the outdoor unit for the maximum pipe length.

●For multi-connections ,see the installation manual for the multi-outdoor unit.

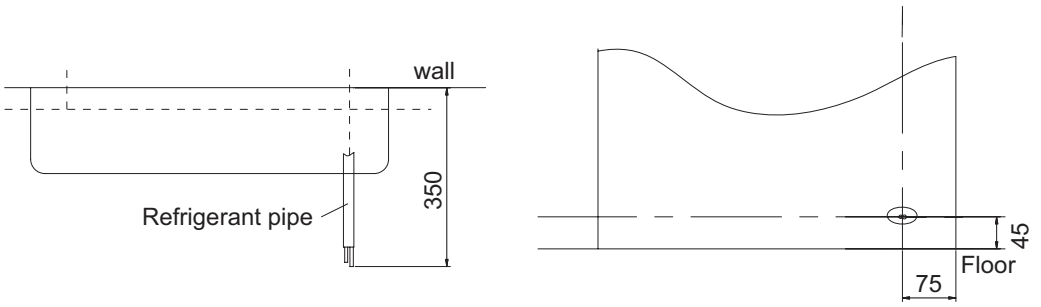

Unit: mm

4. Boring a Wall Hole and Installing Wall Embedded Pipe

● For walls containing metal frame or metal board ,be sure to use a wall embedded pipe and wall cover in the feed-through hole to

● Be sure to caulk the gaps around the pipes with caulking material to prevent water leakage.

(1) Bore a feed-through hole of 55mm in the wall so it has a down slope toward the outside.

(2) Insert a wall pipe into the hole.

(3) Insert a wall cover into wall pipe .

(4) After completing refrigerant piping, wiring, and drain piping, caulk pipe hole gap with putty.

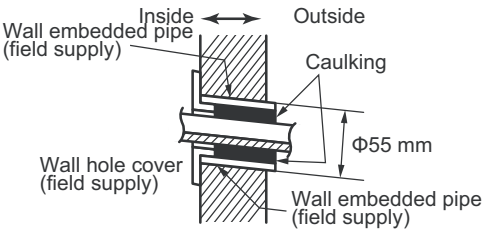

5. Drain Piping

(1) Use commercial regid polyvinyl chloride pipe general VP 20 pipe, outer diameter 26mm, inner diameter 20mm for the drain pipe.

(2)The drain hose (outer diameter 18mm at connecting end, 220mm long)is supplied with the indoor unit. Prepare the drain pipe picture below position.

(3) The drain pipe should be inclined downward so that water will flow smoothly without any accumulation.(Should not be trap.)

(4) Insert the drain hose to this depth so it wont be pulled out of the drain pipe.

(5) Insulate the indoor drain pipe with 10mm or more of insulation material to prevent condensation.

(6) Remove the air filters and pour some water into the drain pan to check the water flows smoothly.

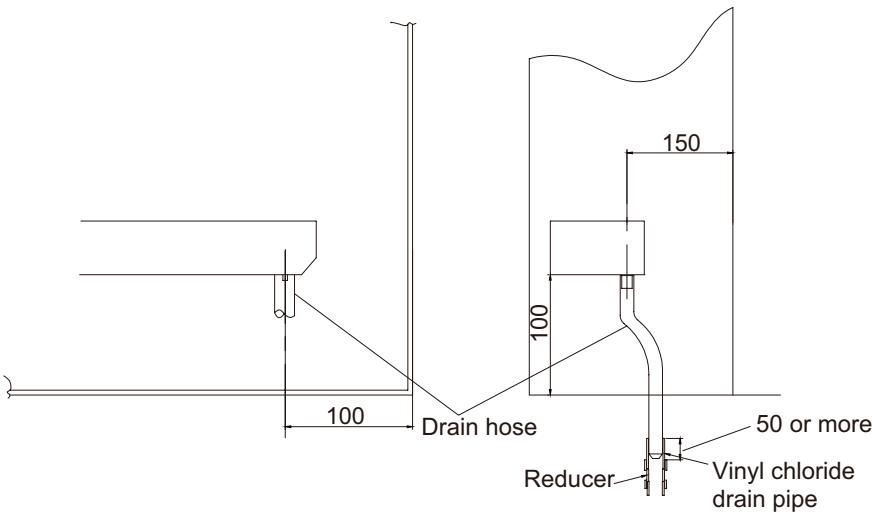

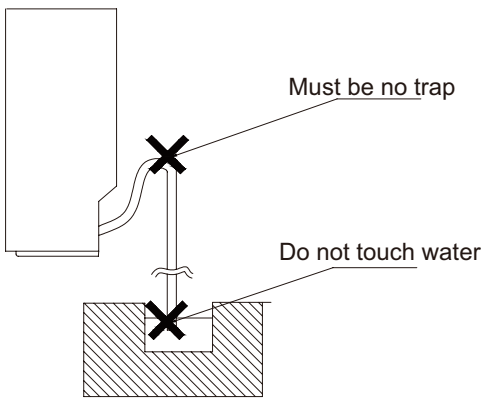

Unit: mm

6. Installing Indoor Unit

Preparation

●Open the front panel, remove the 4 screws and dismount the front grille while pulling it forward.
●Follow the arrows to disengage the clasps on the front case to remove it.
●Follow the procedure below when removing the slit portions.

■For Moldings
●Remove the pillars. (Remove the slit portions on the bottom frame using nippers.)

■For Side Piping
●Remove the pillars.
(1) Remove the 7screws.
(2) Remove the upper casing (2 tabs).
(3) Remove the left and right casings (2 tabs on eachside).
(4) Remove the slit portions on the bottom frame and casings using nippers .
(5) Return by following the steps in reverse order(3>2>1).

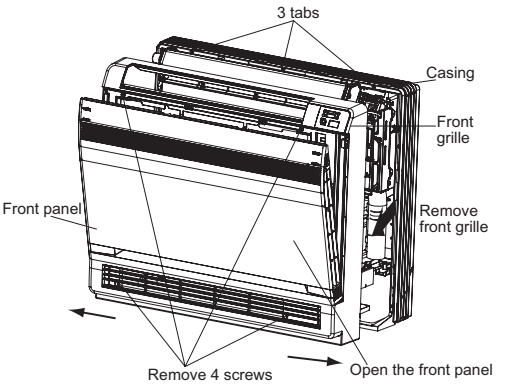

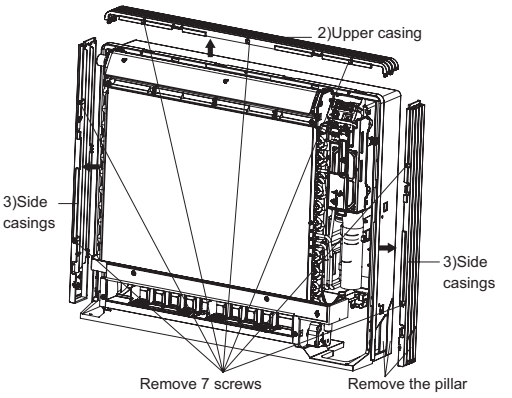

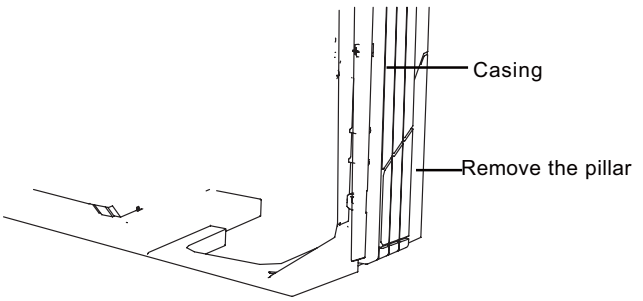

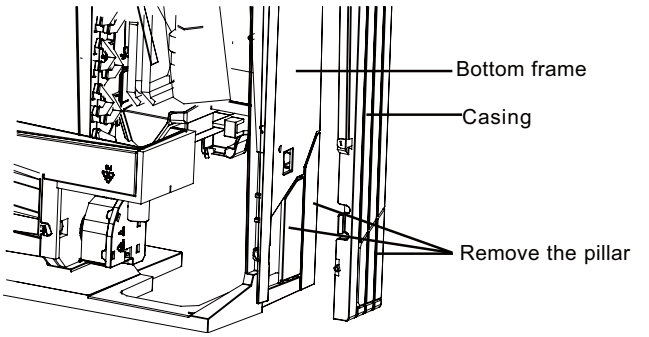

Installation

●Secure using 6 screws for floor installations.(Do not forget to secure to the rear wall.)
●For wall installations, secure the mounting plate using 5 screws and the indoor unit using 4 screws.The mounting plate should be installed on a wall which can support the weight of the indoor unit.
(1) Temporarily secure the mounting plate to the wall, make sure that the panel is completely level, and mark the boring points on the wall.
(2) Secure the mounting plate to the wall with screws.

Floor Installation

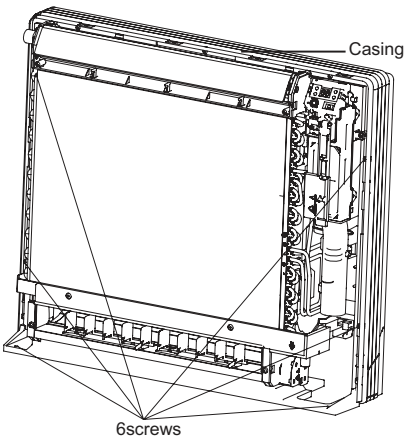

Wall Installation

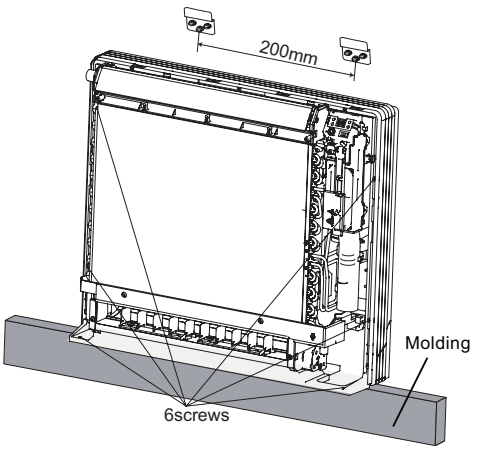

(3) Once refrigerant piping and drain piping connections are complete, fill in the gap of the through hole with putty. A gap can lead to condensation on the refrigerant pipe, and drain pipe, and the entry of insects into the pipes.
(4) Attach the front panel and front grille in their original positions once all connections are complete.

7. Flaring the Pipe End
(1) Cut the pipe end with a pipe cutter.
(2) Remove burrs with the cut surface facing downward so that the chips do not enter the pipe.
(3) Fit the flare nut on the pipe.
(4) Flare the pipe.
(5) Check that the flaring is properly made.

⚠ CAUTION

(1) DO not use mineral oil on flared part.
(2) Prevent mineral oil from getting into the system as this would reduce the lifetime of the units.
(3) Never use piping which had been used for previous installations. Only use parts which are delivered with the unit.
(4) Do never install a drier to this R410A unit in order to guarantee its lifetime.
(5) The drying material may dissolve and damage the system.
(6) Incomplete flaring may cause refrigerant gas leakage.

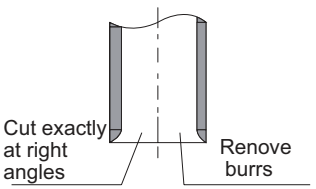

Flaring
Set exactly at the position shown below

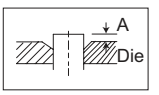

	Flare tool for R32	Conventional flare tool	
	Clutch-type	Clutch-type (Rigid-type)	Wing-nut type (Imperial-type)
A	0-0.5mm	1.0-1.5mm	1.5-2.0mm

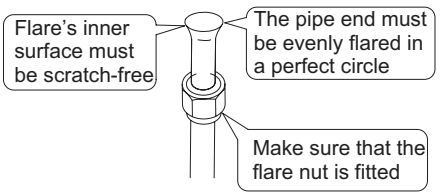

8. Connecting the Refrigerant Pipe
(1) Use torque wrenches when tightening the flare nuts to prevent damage to the flare nuts and gas leaks.

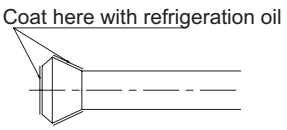

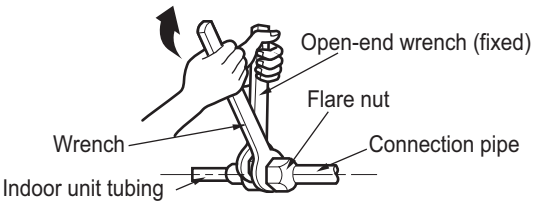

(2) Align the centres of both flares and tighten the flares and tighten the flare nuts 3 or 4 turns by hand.
Then tighten them fully with the torque wrenches.
(3) To prevent gas leakage, apply refrigeration oil on both inner and outer surfaces in the flare. (Use refrigeration oil for R410A.)

Flare nut tightening torque		
Gas side		Liquid side
09/12K	18K	09/12K
3/8 inch	1/2 inch	1/4 inch
31-35 N.m	50-55 N.m	15-20 N.m

Caution on Piping Handling
(1) Protect the open end of the pipe against dust and moisture.
(2) All pipe bends should be as gentle as possible. Use a pipe bender for bending.
(Bending radius should be 30 to 40mm or larger.)

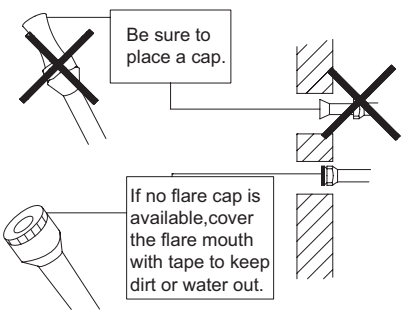

Selection of Copper and Heat Insulation Materials

When using commercial copper pipes and fittings, observe the following:

(1) Insulation material: Polyethylene foam

Heat transfer rate:0.041 to 0.052W/mK(0.035 to 0.045kca/(mh°C

Refrigerant gas pipes surface temperature reaches 110 max.

Choose heat insulation materials that will withstand this temperature.

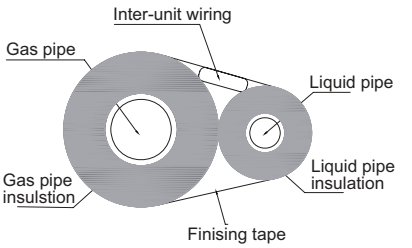

(2) Be sure to insulate both the gas and liquid piping and to provide insulation dimensions as below.

Gas side		Liquid side	Gas pipe thermal insulation		Liquid pipe thermal insulation
09/12K	18K		09/12K	18K	
O.D. 9.55mm	O.D. 12.7mm	O.D. 6.4mm	I.D. 12-15mm	I.D. 14-16mm	I.D. 8-10mm
Thickness 0.8mm			Thickness 10mm Min.		

(3) Use separate thermal insulation pipes for gas and liquid refrigerant pipes.

9. Checking for Gas Leakage

(1) Check for leakage of gas after air purging

(2) See the sections on air purges and gas leak checks in the installation manual for the outdoor unit.

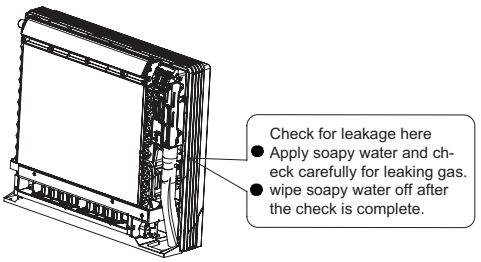

10. Attaching the Connection Pipe

●Attach the pipe after checking for gas leakage, described above.

(1) Cut the insulated portion of the on-site piping, matching it up with the connecting portion.

(2) Secure the slit on the refrigerant piping side with the butt joint on the auxiliary piping using the tape, making sure there are no gaps.

(3) Wrap the slit and butt joint with the included insulation sheet, making sure there are no gaps.

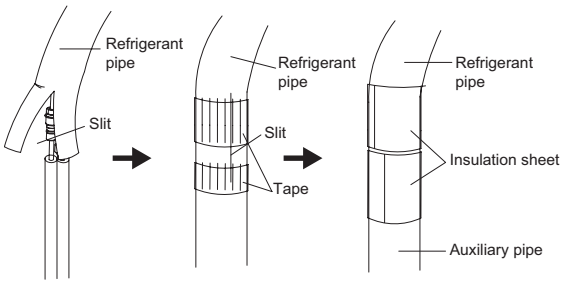

⚠ CAUTION

(1) Insulate the joint of the pipes securely. Incomplete insulation may lead to water leakage.

(2) Push the pipe inside so it does not place undue force on the front grille.

11. Connecting the Drain Hose

Insert the supplied C drain hose into the socket of the drain pan.

Fully insert the drain hose until it adheres to a seat of the socket.

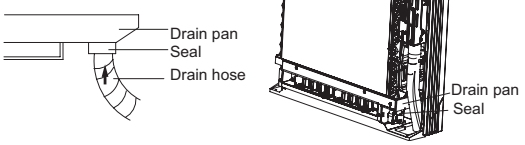

12. Wiring

With a Multi indoor unit, install as described in the installation manual supplied with the Multi outdoor unit.

●Live the sensor securing plate, remove the front metal plate cover, and connect the branch wiring to the terminal block.

(1) Strip wire ends (15mm)

(2) Mach wire colours with terminal numbers on indoor and outdoor units terminal blocks and firmly screw wires to the corresponding terminals.

(3) Connect the earth wires to the corresponding terminals.

(4) Pull wires to make sure that they are securely latches up, then retain wires with wire retainer.

(5) In case of connecting to an adapter system, Run the remote controller cable and attach the S21. (Refer to 11. When connecting go an system.)

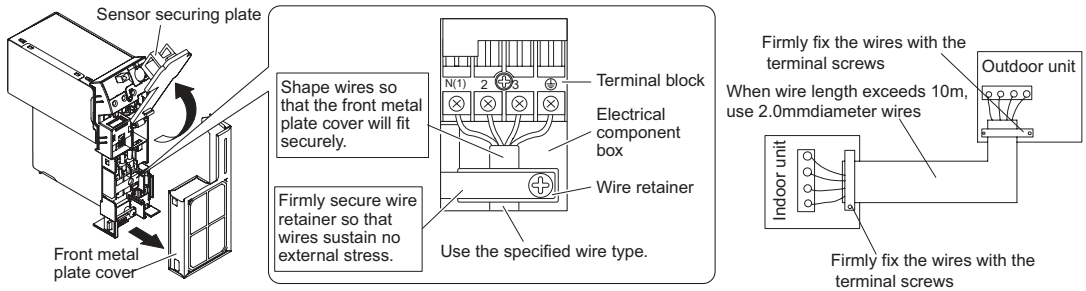

⚠ CAUTION

(1) Do not use tapped wires, stranded wires, extensioncords, or starburst connections, as they may cause overheating, electrical shock, or fire.
(2) Do not use locally purchased electrical parts inside the product. (Do not branch the power for the drain pump, etc, from the terminal block.) Doing so may cause electric shock or fire.)

8.3 Outdoor Unit Installation

1. Fix the Support of Outdoor Unit(Select it according to the actual installation situation)

(1) Select installation location according to the house structure.
(2) Fix the support of outdoor unit on the selected location with expansion screws.

CAUTION

(1) Take sufficient protective measures when installing the outdoor unit.
(2) Make sure the support can withstand at least four times the unit weight.
(3) The outdoor unit should be installed at least 3cm above the floor in order to install drain joint.(As show in Fig.A)
(4) For the unit with cooling capacity of 2300W~5000W, 6 expansion screws are needed; for the unit with cooling capacity of 6000W~8000W, 8 expansion screws are needed; for the unit with cooling capacity of 10000W~16000W, 10 expansion screws are needed.

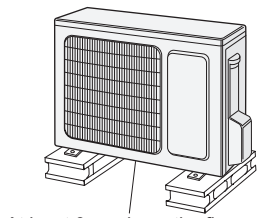

Fig.A

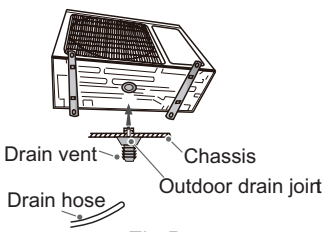

Fig.B

2. Install Drain Joint(Only for cooling and heating unit)

(1) Connect the outdoor drain joint into the hole on the chassis.
(2) Connect the drain hose into the drain vent.(As show in Fig.B)

3. Fix Outdoor Unit

(1) Place the outdoor unit on the support.
(2) Fix the foot holes of outdoor unit with bolts.(As show in Fig.C)

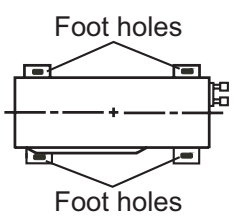

Fig.C

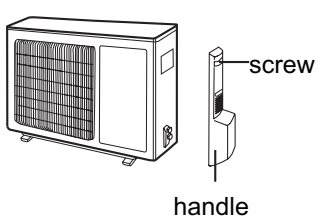

Fig.D

4. Connect Indoor and Outdoor Pipes

(1) Remove the screw on the right handle of outdoor unit and then remove the handle.(As show in Fig.D)
(2) Remove the screw cap of valve and aim the pipe joint at the bellmouth of pipe.(As show in Fig.E)

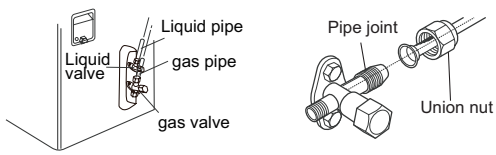

Fig.E

(3) Pretightening the union nut with hand.
(4) Tighten the union nut with torque wrench .

Refer to the following table for wrench moment of force:

Hex nut diameter(mm)	Tightening torque(N·m)
Φ6	15~20
Φ9.52	30~40
Φ12	45~55
Φ16	60~65
Φ19	70~75

5. Connect Outdoor Electric Wire

(1) Remove the wire clip; connect the power connection wire and signal control wire (only for cooling and heating unit) to the wiring terminal according to the color; fix them with screws.(As show in Fig.F)

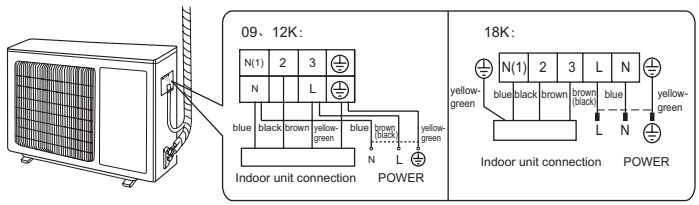

Fig.F

Note: the wiring board is for reference only, please refer to the actual one.

(2) Fix the power connection wire and signal control wire with wire clip (only for cooling and heating unit).

⚠ Note:

(1) After tightening the screw, pull the power cord slightly to check if it is firm.
(2) Never cut the power connection wire to prolong or shorten the distance.

8.4 Vacuum Pumping and Leak Detection

1. Use Vacuum Pump

(1) Remove the valve caps on the liquid valve and gas valve and the nut of refrigerant charging vent.

(2) Connect the charging hose of piezometer to the refrigerant charging vent of gas valve and then connect the other charging hose to the vacuum pump.

(3) Open the piezometer completely and operate for 10-15min to check if the pressure of piezometer remains in -0.1MPa.

(4) Close the vacuum pump and maintain this status for 1-2min to check if the pressure of piezometer remains in -0.1MPa. If the pressure decreases, there may be leakage.

(5) Remove the piezometer, open the valve core of liquid valve and gas valve completely with inner hexagon spanner.

(6) Tighten the screw caps of valves and refrigerant charging vent.

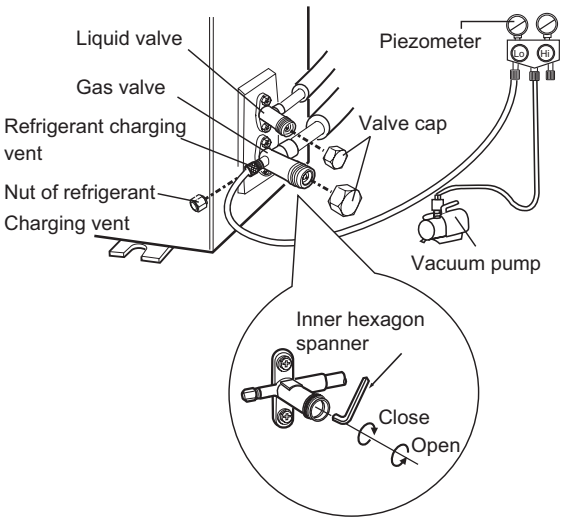

2. Leakage Detection

(1) With leakage detector:

Check if there is leakage with leakage detector.

(2) With soap water:

If leakage detector is not available, please use soap water for leakage detection. Apply soap water at the suspected position and keep the soap water for more than 3min. If there are air bubbles coming out of this position, theres a leakage.

8.5 Check after Installation and Test Operation

1. Check after Installation

Check according to the following requirement after finishing installation.

NO.	Items to be checked	Possible malfunction
1	Has the unit been installed firmly?	The unit may drop, shake or emit noise.
2	Have you done the refrigerant leakage test?	It may cause insufficient cooling (heating) capacity.
3	Is heat insulation of pipeline sufficient?	It may cause condensation and water dripping.
4	Is water drained well?	It may cause condensation and water dripping.
5	Is the voltage of power supply according to the voltage marked on the nameplate?	It may cause malfunction or damage the parts.
6	Is electric wiring and pipeline installed correctly?	It may cause malfunction or damage the parts.
7	Is the unit grounded securely?	It may cause electric leakage.
8	Does the power cord follow the specification?	It may cause malfunction or damage the parts.
9	Is there any obstruction in air inlet and air outlet?	It may cause insufficient cooling (heating) capacity.
10	The dust and sundries caused during installation are removed?	It may cause malfunction or damaging the parts.
11	The gas valve and liquid valve of connection pipe are open completely?	It may cause insufficient cooling (heating) capacity.
12	Is the inlet and outlet of piping hole been covered?	It may cause insufficient cooling (heating) capacity or waster eletricity.

2. Test Operation

(1) Preparation of test operation

● The client approves the air conditioner installation.

● Specify the important notes for air conditioner to the client.

(2) Method of test operation

● Put through the power, press ON/OFF button on the remote controller to start operation.

● Press MODE button to select AUTO, COOL, DRY, FAN and HEAT to check whether the operation is normal or not.

● If the ambient temperature is lower than 16℃ , the air conditioner cant start cooling.

9. Maintenance

9.1 Error Code List

No.	Malfunction Name	Display Method of Indoor Unit Dual-8 Code Display	A/C status	Possible Causes
1	High pressure protection of system	E1	During cooling and drying operation, except indoor fan operates, all loads stop operation. During heating operation, the complete unit stops.	Possible reasons: 1. Refrigerant was superabundant; 2. Poor heat exchange (including filth blockage of heat exchanger and bad radiating environment); Ambient temperature is too high.
2	Low pressure protection of system	E3	The Dual-8 Code Display will show E3 until the low pressure switch stop operation.	1.Low-pressure protection 2.Low-pressure protection of system 3.Low-pressure protection of compressor
3	High discharge temperature protection of compressor	E4	During cooling and drying operation, compressor and outdoor fan stop while indoor fan operates. During heating operation, all loads stop.	Please refer to the malfunction analysis (discharge protection, overload).
4	Overcurrent protection	E5	During cooling and drying operation, compressor and outdoor fan stop while indoor fan operates. During heating operation, all loads stop.	1. Supply voltage is unstable; 2. Supply voltage is too low and load is too high; 3. Evaporator is dirty.
5	Communi-cation Malfunction	E6	During cooling operation, compressor stops while indoor fan motor operates. During heating operation, the complete unit stops.	Refer to the corresponding malfunction analysis.
6	High temperature resistant protection	E8	During cooling operation: compressor will stop while indoor fan will operate. During heating operation, the complete unit stops.	Refer to the malfunction analysis (overload, high temperature resistant).
7	EEPROM malfunction	EE	During cooling and drying operation, compressor will stop while indoor fan will operate; During heating operation, the complete unit will stop	Replace outdoor control panel AP1
8	Limit/ decrease frequency due to high temperature of module	EU	All loads operate normally, while operation frequency for compressor is decreased	Discharging after the complete unit is de-energized for 20mins, check whether the thermal grease on IPM Module of outdoor control panel AP1 is sufficient and whether the radiator is inserted tightly. If its no use, please replace control panel AP1.
9	Malfunction protection of jumper cap	C5	Wireless remote receiver and button are effective, but can not dispose the related command	1. No jumper cap insert on mainboard. 2. Incorrect insert of jumper cap. 3. Jumper cap damaged. 4. Abnormal detecting circuit of mainboard.

No.	Malfunction Name	Display Method of Indoor Unit Dual-8 Code Display	A/C status	Possible Causes
10	Gathering refrigerant	Fo	When the outdoor unit receive signal of Gathering refrigerant ,the system will be forced to run under cooling mode for gathering refrigerant	Nominal cooling mode
11	Indoor ambient temperature sensor is open/short circuited	F1	During cooling and drying operation, indoor unit operates while other loads will stop; during heating operation, the complete unit will stop operation.	1. Loosening or bad contact of indoor ambient temp. sensor and mainboard terminal. 2. Components in mainboard fell down leads short circuit. 3. Indoor ambient temp. sensor damaged.(check with sensor resistance value chart) 4. Mainboard damaged.
12	Indoor evaporator temperature sensor is open/short circuited	F2	AC stops operation once reaches the setting temperature. Cooling, drying: internal fan motor stops operation while other loads stop operation; heating: AC stop operation	1. Loosening or bad contact of Indoor evaporator temp. sensor and mainboard terminal. 2. Components on the mainboard fall down leads short circuit. 3. Indoor evaporator temp. sensor damaged.(check temp. sensor value chart for testing) 4. Mainboard damaged.
13	Outdoor ambient temperature sensor is open/short circuited	F3	During cooling and drying operating, compressor stops while indoor fan operates; During heating operation, the complete unit will stop operation	Outdoor temperature sensor hasnt been connected well or is damaged. Please check it by referring to the resistance table for temperature sensor)
14	Outdoor condenser temperature sensor is open/short circuited	F4	During cooling and drying operation, compressor stops while indoor fan will operate; During heating operation, the complete unit will stop operation.	Outdoor temperature sensor hasnt been connected well or is damaged. Please check it by referring to the resistance table for temperature sensor)
15	Outdoor discharge temperature sensor is open/short circuited	F5	During cooling and drying operation, compressor will sop after operating for about 3 mins, while indoor fan will operate; During heating operation, the complete unit will stop after operating for about 3 mins.	1.Outdoor temperature sensor hasnt been connected well or is damaged. Please check it by referring to the resistance table for temperature sensor) 2.The head of temperature sensor hasnt been inserted into the copper tube
16	Limit/ decrease frequency due to overload	F6	All loads operate normally, while operation frequency for compressor is decreased	Refer to the malfunction analysis (overload, high temperature resistant)
17	Decrease frequency due to overcurrent	F8	All loads operate normally, while operation frequency for compressor is decreased	The input supply voltage is too low; System pressure is too high and overload

No.	Malfunction Name	Display Method of Indoor Unit Dual-8 Code Display	A/C status	Possible Causes
18	Decrease frequency due to high air discharge	F9	All loads operate normally, while operation frequency for compressor is decreased	Overload or temperature is too high; Refrigerant is insufficient; Malfunction of electric expansion valve (EKV)
19	Limit/ decrease frequency due to antifreezing	FH	All loads operate normally, while operation frequency for compressor is decreased	Poor air-return in indoor unit or fan speed is too low
20	Voltage for DC bus-bar is too high	PH	During cooling and drying operation, compressor will stop while indoor fan will operate; During heating operation, the complete unit will stop operation.	1. Measure the voltage of position L and N on wiring board (XT), if the voltage is higher than 265VAC, turn on the unit after the supply voltage is increased to the normal range. 2.If the AC input is normal, measure the voltage of electrolytic capacitor C on control panel (AP1), if its normal, theres malfunction for the circuit, please replace the control panel (AP1)
21	Voltage of DC bus-bar is too low	PL	During cooling and drying operation, compressor will stop while indoor fan will operate; During heating operation, the complete unit will stop	1. Measure the voltage of position L and N on wiring board (XT), if the voltage is higher than 150VAC, turn on the unit after the supply voltage is increased to the normal range. 2.If the AC input is normal, measure the voltage of electrolytic capacitor C on control panel (AP1), if its normal, theres malfunction for the circuit, please replace the control panel (AP1)
22	Compressor Min frequence in test state	P0		Showing during min. cooling or min. heating test
23	Compressor rated frequence in test state	P1		Showing during nominal cooling or nominal heating test
24	Compressor maximum frequence in test state	P2		Showing during max. cooling or max. heating test

No.	Malfunction Name	Display Method of Indoor Unit Dual-8 Code Display	A/C status	Possible Causes
26	Compressor intermediate frequence in test state	P3		Showing during middle cooling or middle heating test
26	Overcurrent protection of phase current for compressor	P5	During cooling and drying operation, compressor will stop while indoor fan will operate; During heating operation, the complete unit will stop operation.	Refer to the malfunction analysis (IPM protection, loss of synchronism protection and overcurrent protection of phase current for compressor.
27	Charging malfunction of capacitor	PU	During cooling and drying operation, compressor will stop while indoor fan will operate; During heating operation, the complete unit will stop	Refer to the part three—charging malfunction analysis of capacitor
28	Malfunction of module temperature sensor circuit	P7	During cooling and drying operation, compressor will stop while indoor fan will operate; During heating operation, the complete unit will stop	Replace outdoor control panel AP1
29	Module high temperature protection	P8	During cooling operation, compressor will stop while indoor fan will operate; During heating operation, the complete unit will stop	After the complete unit is de-energized for 20mins, check whether the thermal grease on IPM Module of outdoor control panel AP1 is sufficient and whether the radiator is inserted tightly. If its no use, please replace control panel AP1.
30	Overload protection for compressor	H3	During cooling and drying operation, compressor will stop while indoor fan will operate; During heating operation, the complete unit will stop operation.	1. Wiring terminal OVC-COMP is loosened. In normal state, the resistance for this terminal should be less than 1ohm. 2.Refer to the malfunction analysis (discharge protection, overload)
31	IPM protection	H5	During cooling and drying operation, compressor will stop while indoor fan will operate; During heating operation, the complete unit will stop operation.	Refer to the malfunction analysis (IPM protection, loss of synchronism protection and overcurrent protection of phase current for compressor.
32	Internal motor (fan motor) do not operate	H6	Internal fan motor, external fan motor, compressor and electric heater stop operation,guide louver stops at present location.	1. Bad contact of DC motor feedback terminal. 2. Bad contact of DC motor control end. 3. Fan motor is stalling. 4. Motor malfunction. 5. Malfunction of mainboard rev detecting circuit.

No.	Malfunction Name	Display Method of Indoor Unit Dual-8 Code Display	A/C status	Possible Causes
33	Desynchro-nizing of compressor	H7	During cooling and drying operation, compressor will stop while indoor fan will operate; During heating operation, the complete unit will stop operation.	Refer to the malfunction analysis (IPM protection, loss of synchronism protection and overcurrent protection of phase current for compressor.
34	PFC protection	HC	During cooling and drying operation, compressor will stop while indoor fan will operate; During heating operation, the complete unit will stop operation.	Replace outdoor control panel AP1 or Reactor
35	Outdoor DC fan motor malfunction	L3	Outdoor DC fan motor malfunction lead to compressor stop operation,	DC fan motor malfunction or system blocked or the connector loosed
36	power protection	L9	compressor stop operation and Outdoor fan motor will stop 30s latter , 3 minutes latter fan motor and compressor will restart	To protect the electronical components when detect high power
37	Indoor unit and outdoor unit doesnt match	LP	compressor and Outdoor fan motor cant work	Indoor unit and outdoor unit doesnt match
38	Failure start-up	LC	During cooling and drying operation, compressor will stop while indoor fan will operate; During heating operation, the complete unit will stop operation.	Refer to the malfunction analysis
39	Anti-freezing protection for evaporator	E2	Not the error code. It's the status code for the operation.	
40	Undefined outdoor unit error	oE	Cool: compressor and outdoor fan stops operation, while indoor fan operates; Heat: compressor, outdoor fan and indoor fan stop operation.	1. Outdoor ambient temperature exceeds the operation range of unit (eg: less than-20oC or more than 60oC for cooling; more than 30oC for heating); 2. Failure startup of compressor? 3. Are wires of compressor not connected tightly? 4. Is compressor damaged? 5. Is main board damaged?
41	Malfunction of phase current detection circuit for compressor	U1	During cooling and drying operation, compressor will stop while indoor fan will operate; During heating operation, the complete unit will stop	Replace outdoor control panel AP1
42	Malfunction of voltage dropping for DC bus-bar	U3	During cooling and drying operation, compressor will stop while indoor fan will operate; During heating operation, the complete unit will stop	Supply voltage is unstable

No.	Malfunction Name	Display Method of Indoor Unit Dual-8 Code Display	A/C status	Possible Causes
43	Malfunction of complete units current detection	U5	During cooling and drying operation, the compressor will stop while indoor fan will operate; During heating operating, the complete unit will stop operation.	Theres circuit malfunction on outdoor units control panel AP1, please replace the outdoor units control panel AP1.
44	The four-way valve is abnormal	U7	If this malfunction occurs during heating operation, the complete unit will stop operation.	1.Supply voltage is lower than AC175V; 2.Wiring terminal 4V is loosened or broken; 3.4V is damaged, please replace 4V.
45	Cold air prevention protection	E9	Not the error code. It's the status code for the operation.	
46	Defrosting	Heating indicator off for 0.5s and then blinks for 10s	Not the error code. It's the status code for the operation.	
47	Refrigerant recovery mode	Fo	Refrigerant recovery. The Serviceman operates it for maintenance.	
48	Malfunction of zero-cross detection circuit	U8	The complete unit stops	1.Power supply is abnormal; 2.Detection circuit of indoor control mainboard is abnormal.
49	Malfunction of detecting plate(WIFI)	JF	Loads operate normally, while the unit can't be normally controlled by APP.	1.Main board of indoor unit is damaged; 2.Detection board is damaged; 3.The connection between indoor unit and detection board is not good;

Analysis or processing of some of the malfunction display:

1. Compressor discharge protection

Possible causes: shortage of refrigerant; blockage of air filter; poor ventilation or air flow short pass for condenser; the system has noncondensing gas (such as air, water etc.); blockage of capillary assy (including filter); leakage inside four-way valve causes incorrect operation; malfunction of compressor; malfunction of protection relay; malfunction of discharge sensor; outdoor temperature too high.

Processing method: refer to the malfunction analysis in the above section.

2. Low voltage overcurrent protection

Possi ble cause: Sudden drop of supply voltage.

3. Communication malfunction

Processing method: Check if communication signal cable is connected reliably.

4. Sensor open or short circuit

Processing method: Check whether sensor is normal, connected with the corre sponding position on the controller and if damage of lead wire is found.

5. Compressor over load protection

Possible causes: insufficient or too much refrigrant; blockage of capillary and increase of suction temp.; improper running of compressor, burning in or stuck of bearing, damage of discharge valve; malfunction of protector.

Processing method: adjust refrigerant amount; replace the capillary; replace the compressor; use universal meter to check if the contactor of compress or is fine when it is not overheated, if not replace the protector.

6. System malfunction

ieoverload protection.When tube temperature(Check the temperature of outdoor heat exchanger when cooling and check the temperatur e of indoor heat exchanger when heating) is too high, protectionwill beactivated.

Possi ble causes: Outdoor temperature is too high when cooling; insufficient outdoor air circulation; refrigerant flow malfunction.

please refer to the malfunction analysis in the previous section for handling method .

7. IPM module protection

Processing method:Once the module malfunction happens,if it persists for a long time and can not be selfcanceled, cut off the power and turn off the unit,and then re-energize the unit again after about 10 min.After repeating the procedure for sever times, if the malfunction still exists,replace the module.

9.2 Procedure of Troubleshooting

Indoor unit

1. Malfunction of Temperature Sensor

Main detection points:

- Is the wiring terminal between the temperature sensor and the controller loosened or poorly contacted?
- Is there short circuit due to trip-over of the parts?
- Is the temperature sensor broken?
- Is mainboard broken?

Malfunction diagnosis process:

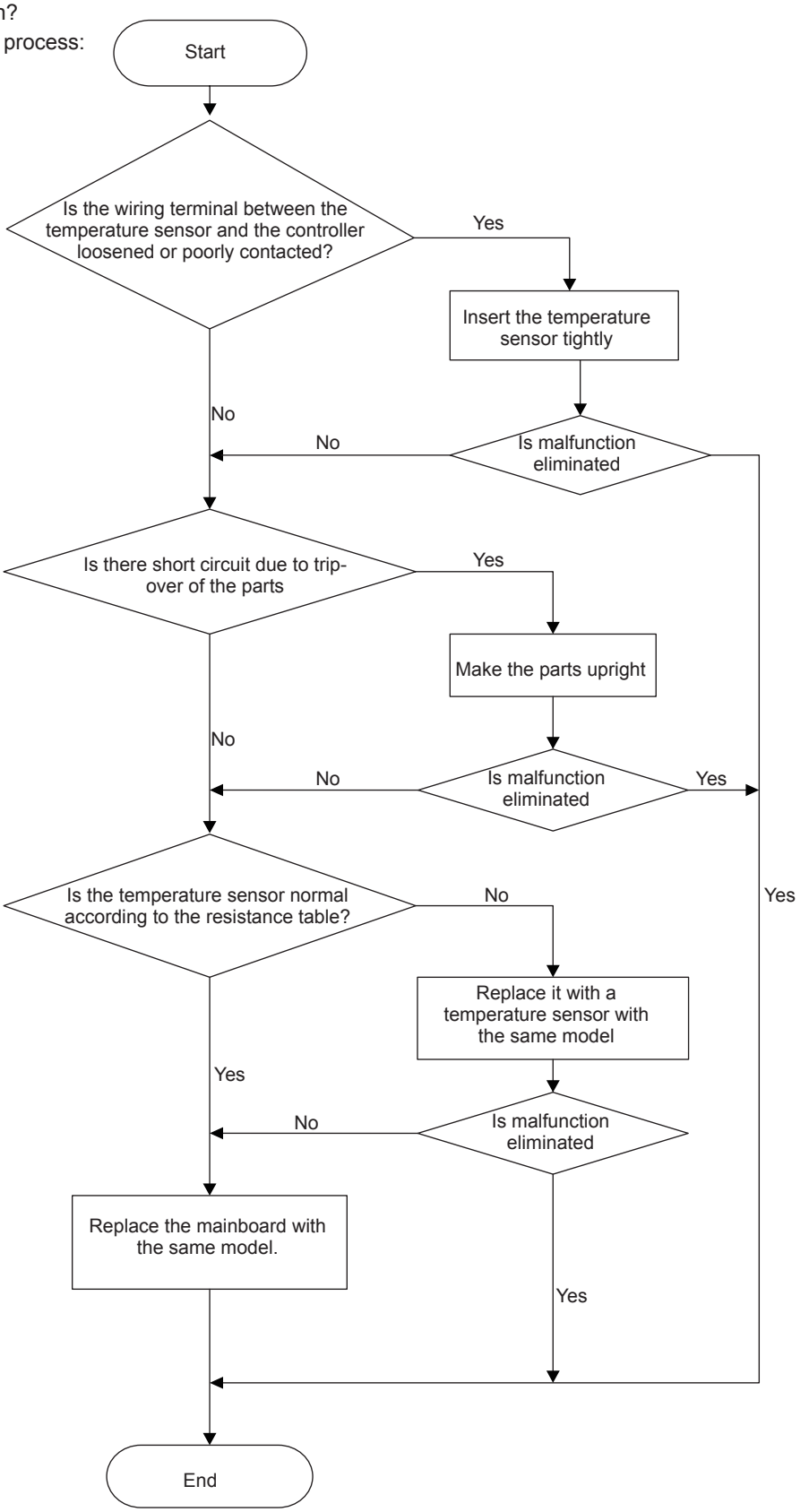

2. Malfunction of Blocked Protection of IDU Fan Motor

Main detection points:

- SmoothlyIs the control terminal of PG motor connected tightly?
- SmoothlyIs the feedback interface of PG motor connected tightly?
- The fan motor cant operate?
- The motor is broken?
- Detectioncircuit of the mainboard is defined abnormal?

Malfunction diagnosis process:

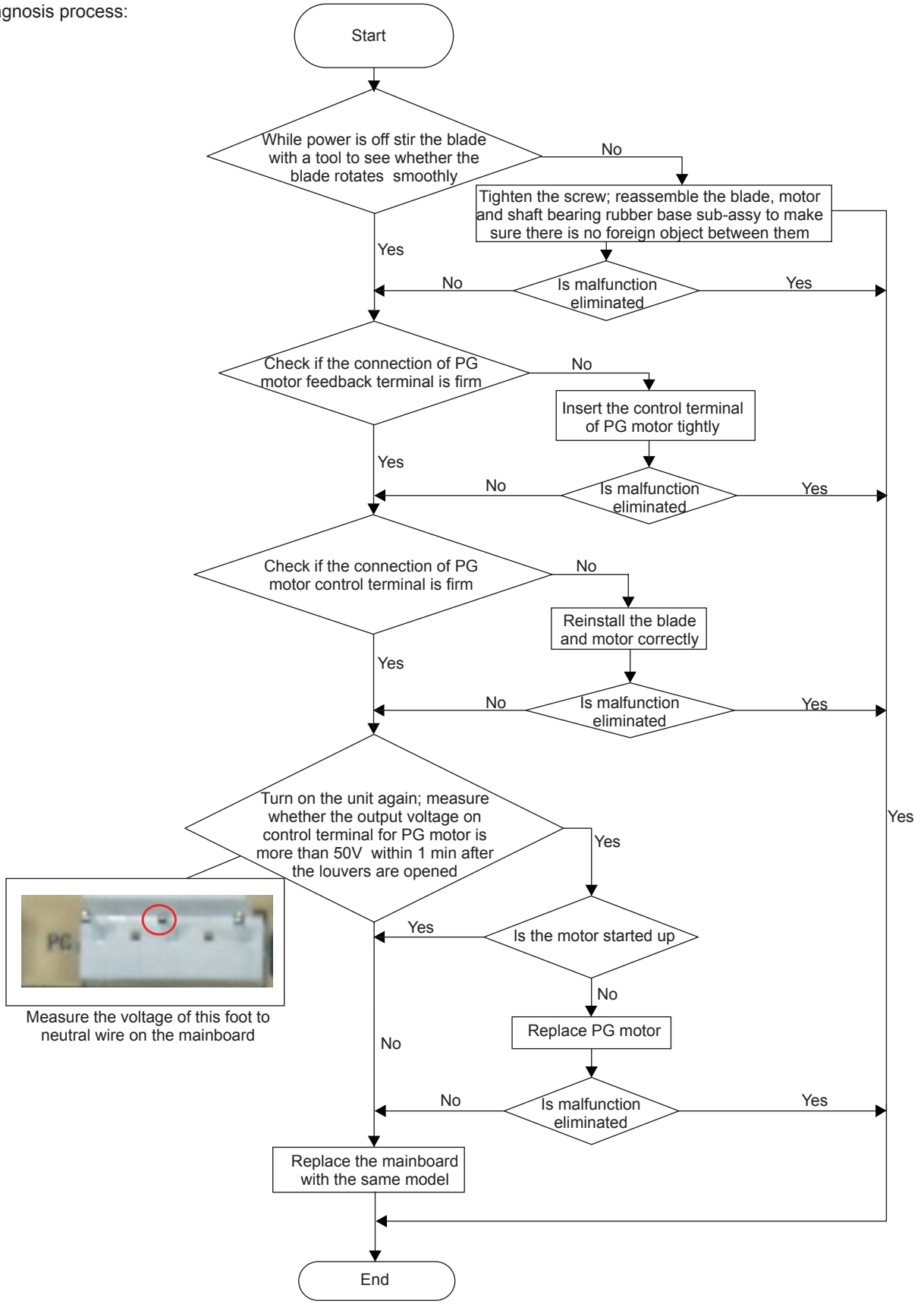

3. Malfunction of Protection of Jumper Cap

Main detection points:

- Is there jumper cap on the mainboard?
- Is the jumper cap inserted correctly and tightly?
- The jumper is broken?
- The motor is broken?
- Detection circuit of the mainboard is defined abnormal?

Malfunction diagnosis process:

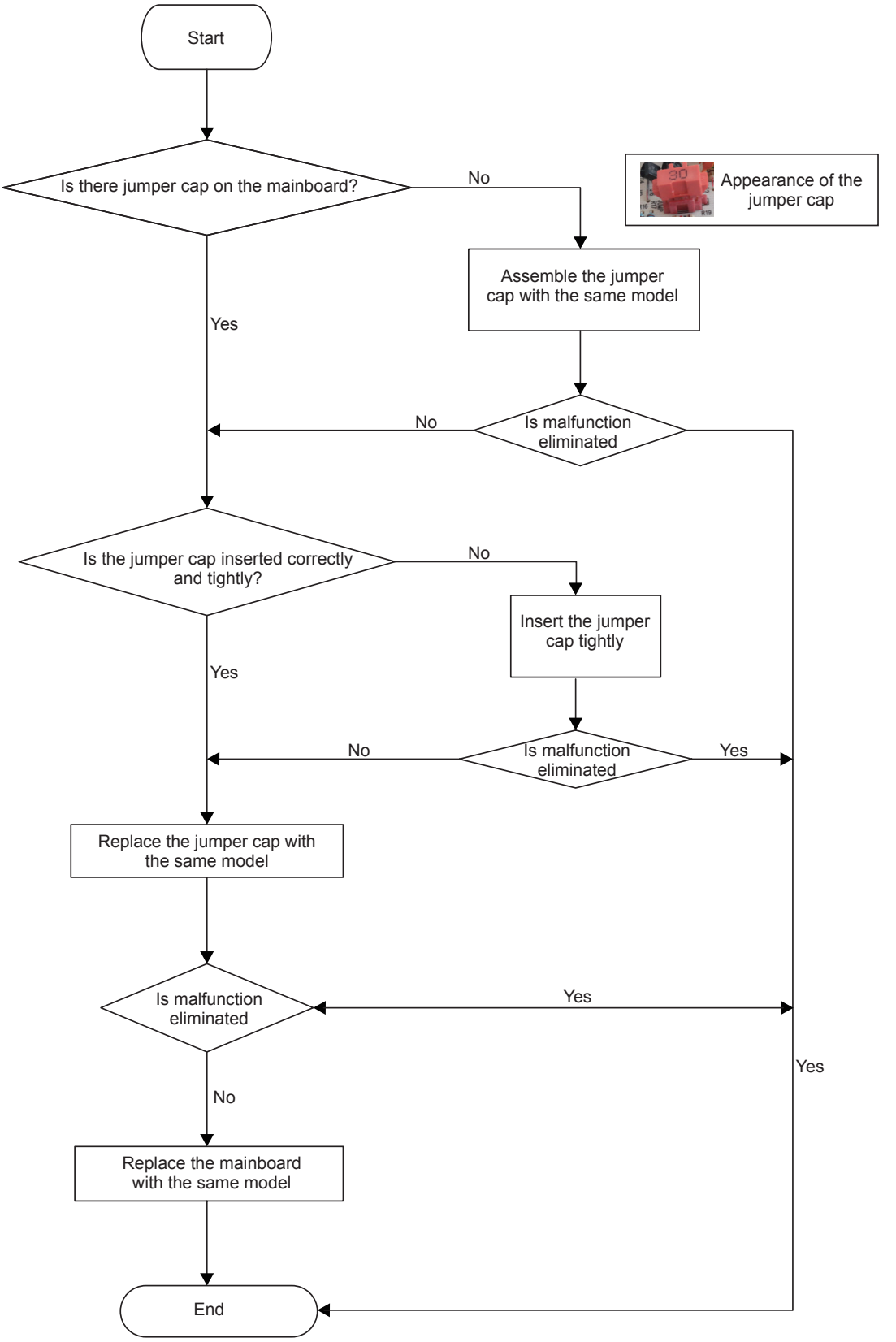

4. Malfunction of Zero-crossing Inspection Circuit Malfunction of the IDU Fan Motor

Main detection points:

● Instant energization afte de-energization while the capacitordischarges slowly?

● The zero-cross detectioncircuit of the mainboard is defined abnormal?

Malfunction diagnosis process:

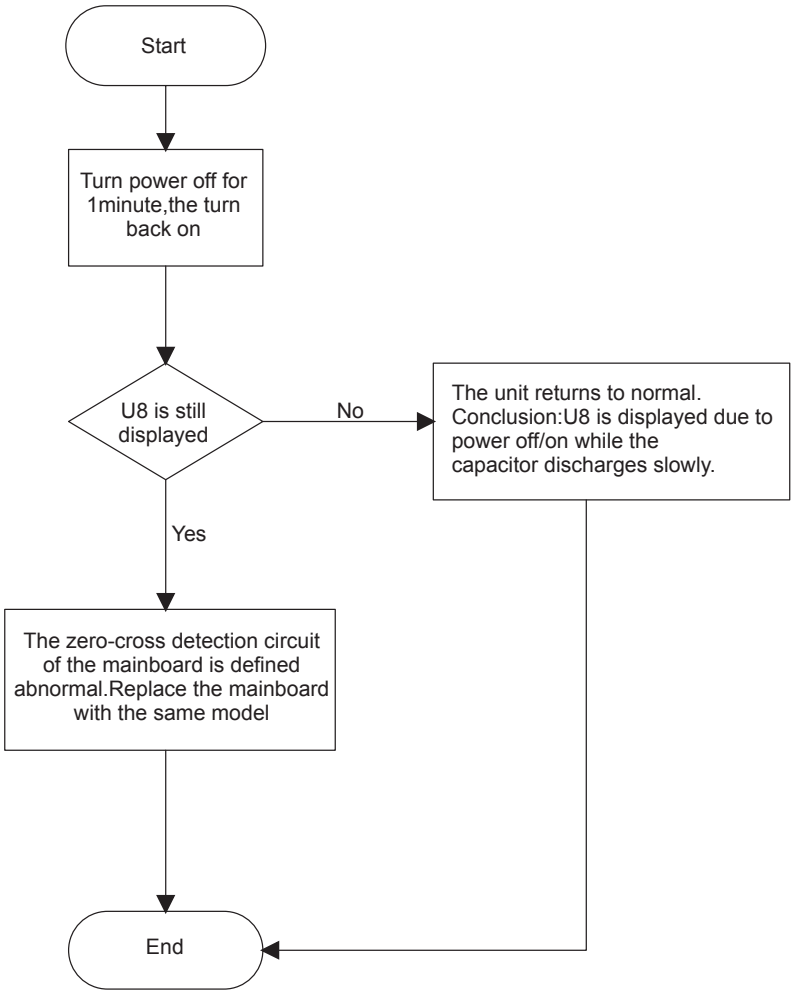

5. Malfunction of detecting plate(WIFI)JF

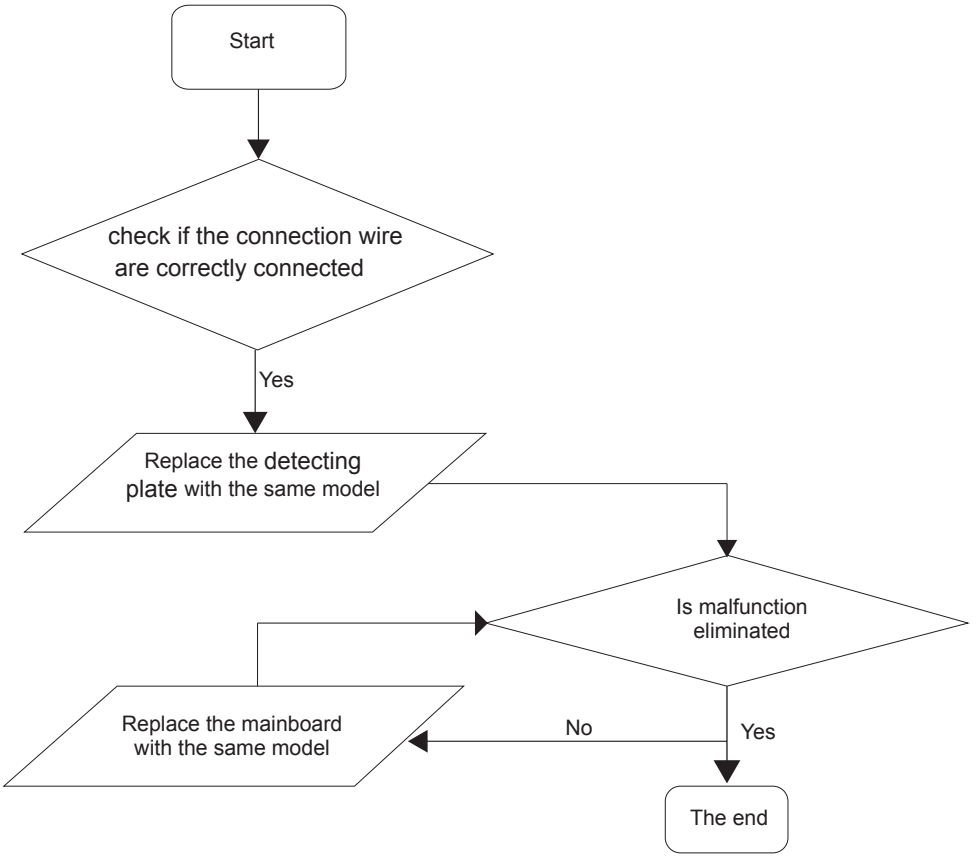

Outdoor unit

1. Capacitor charge fault (Fault with outdoor unit) (AP1 below refers to the outdoor control panel)

Main Check Points:

●Use AC voltmeter to check if the voltage between terminal L and N on the wiring board is within 210VAC~240VAC.

●Is the reactor (L) correctly connected? Is the connection loose or fallen? Is the reactor (L) damaged?

Fault diagnosis process:

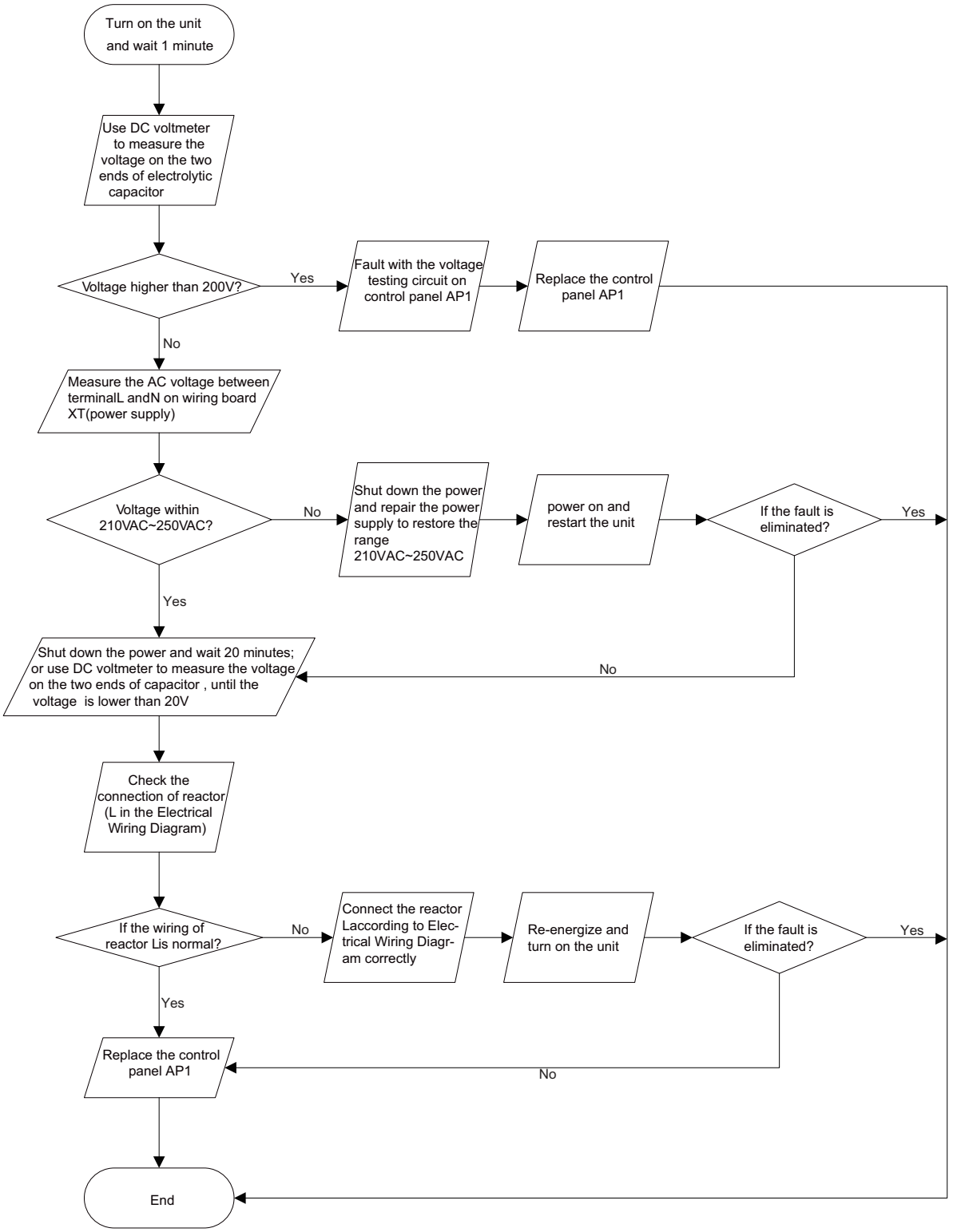

(2) IPM protection, phase current overcurrent (the control board as below indicates the control board of outdoor unit) H5/P5

Mainly detect:

(1) Compressor COMP terminal (2) voltage of power supply (3) compressor
(4) Refrigerant-charging volume (5) air outlet and air inlet of outdoor/indoor unit

Troubleshooting:

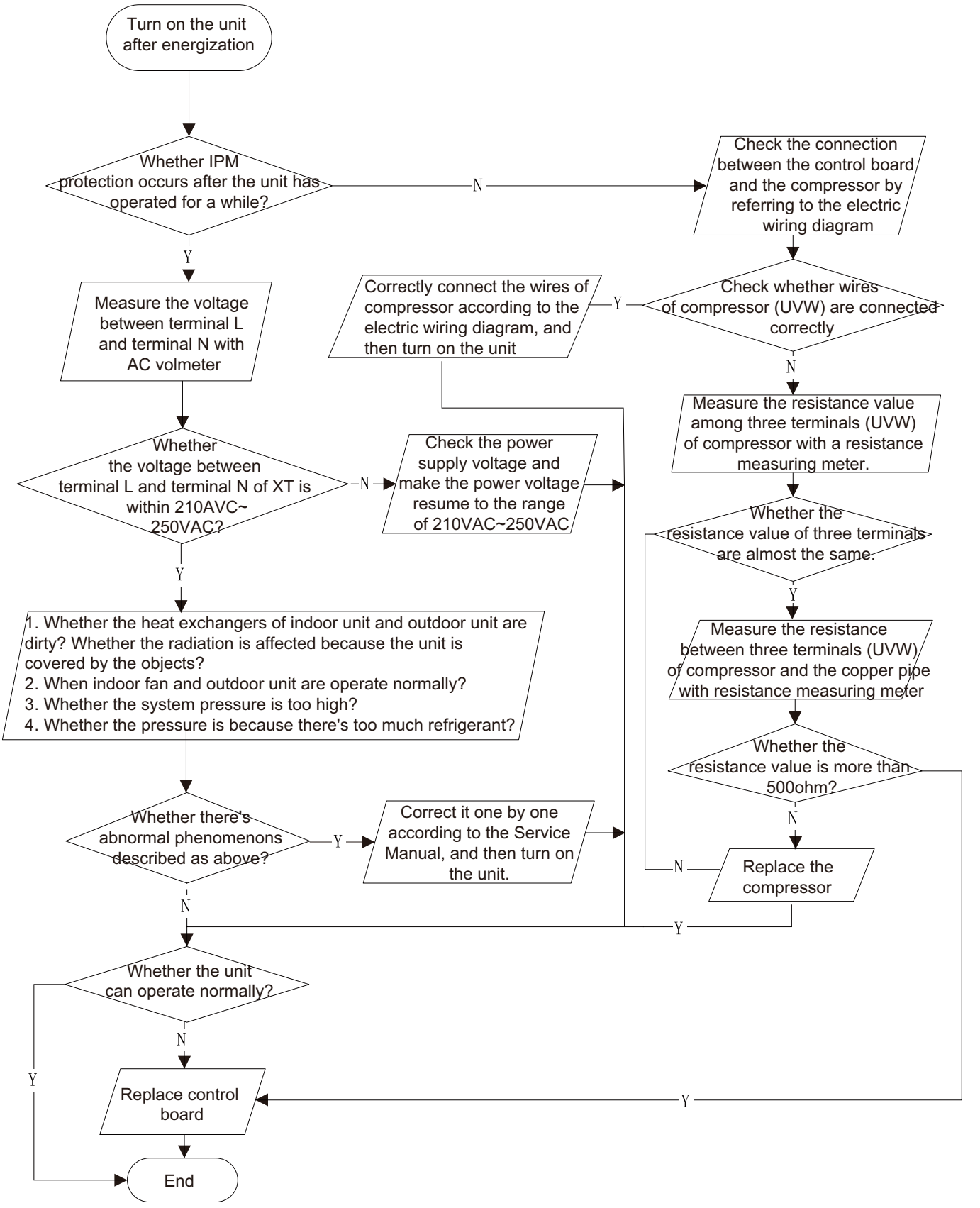

3. High temperature and overload protection diagnosis (AP1 hereinafter refers to the control board of the outdoor unit)

Mainly detect:

●Is outdoor ambient temperature in normal range?

●Are the outdoor and indoor fans operating normally?

●Is the heat dissipation environment inside and outside the unit good?

Fault diagnosis process:

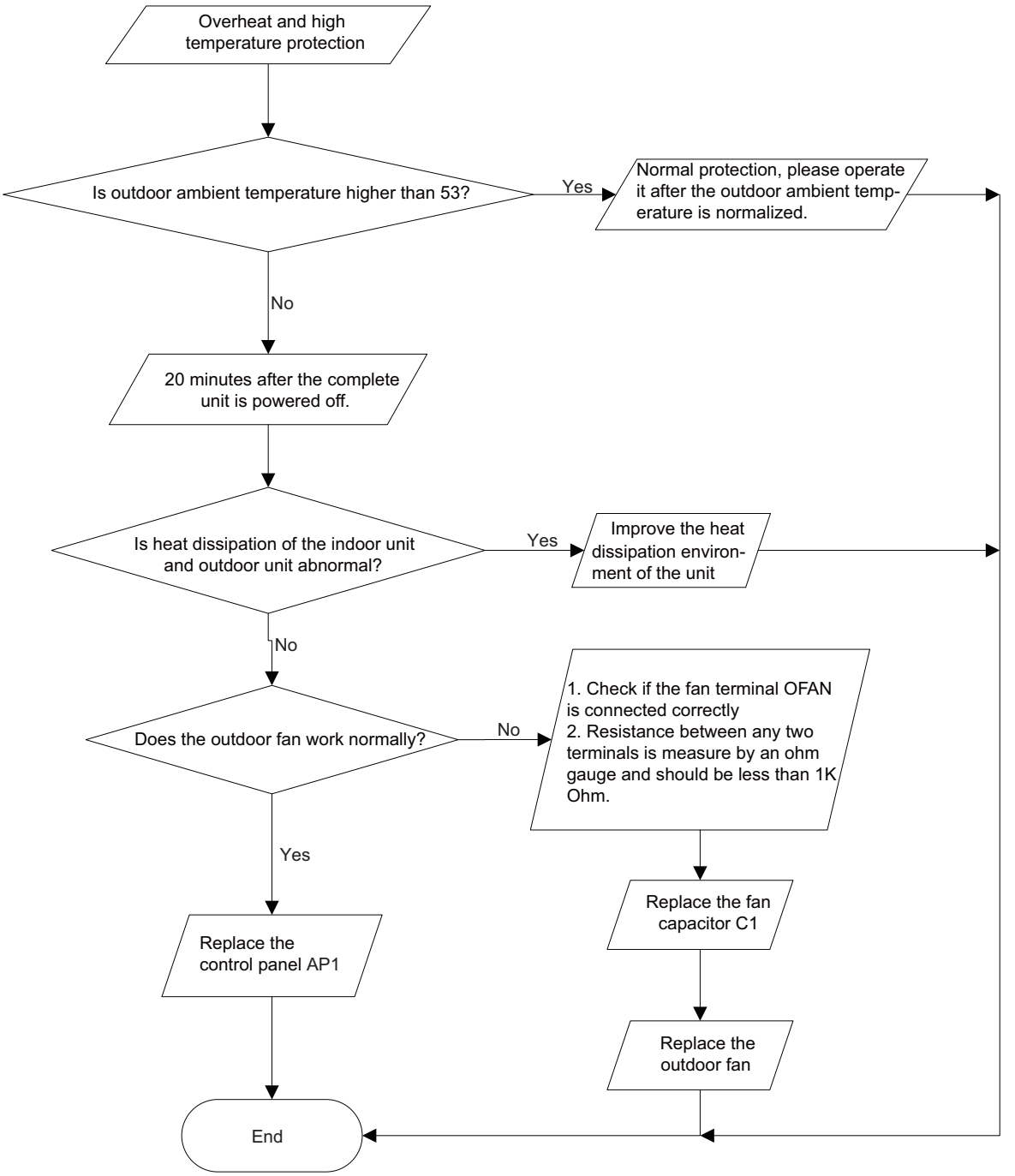

4. Start-up failure (following AP1 for outdoor unit control board)

Mainly detect:

●Whether the compressor wiring is connected correct?

●Is compressor broken?

●Is time for compressor stopping enough?

Fault diagnosis process:

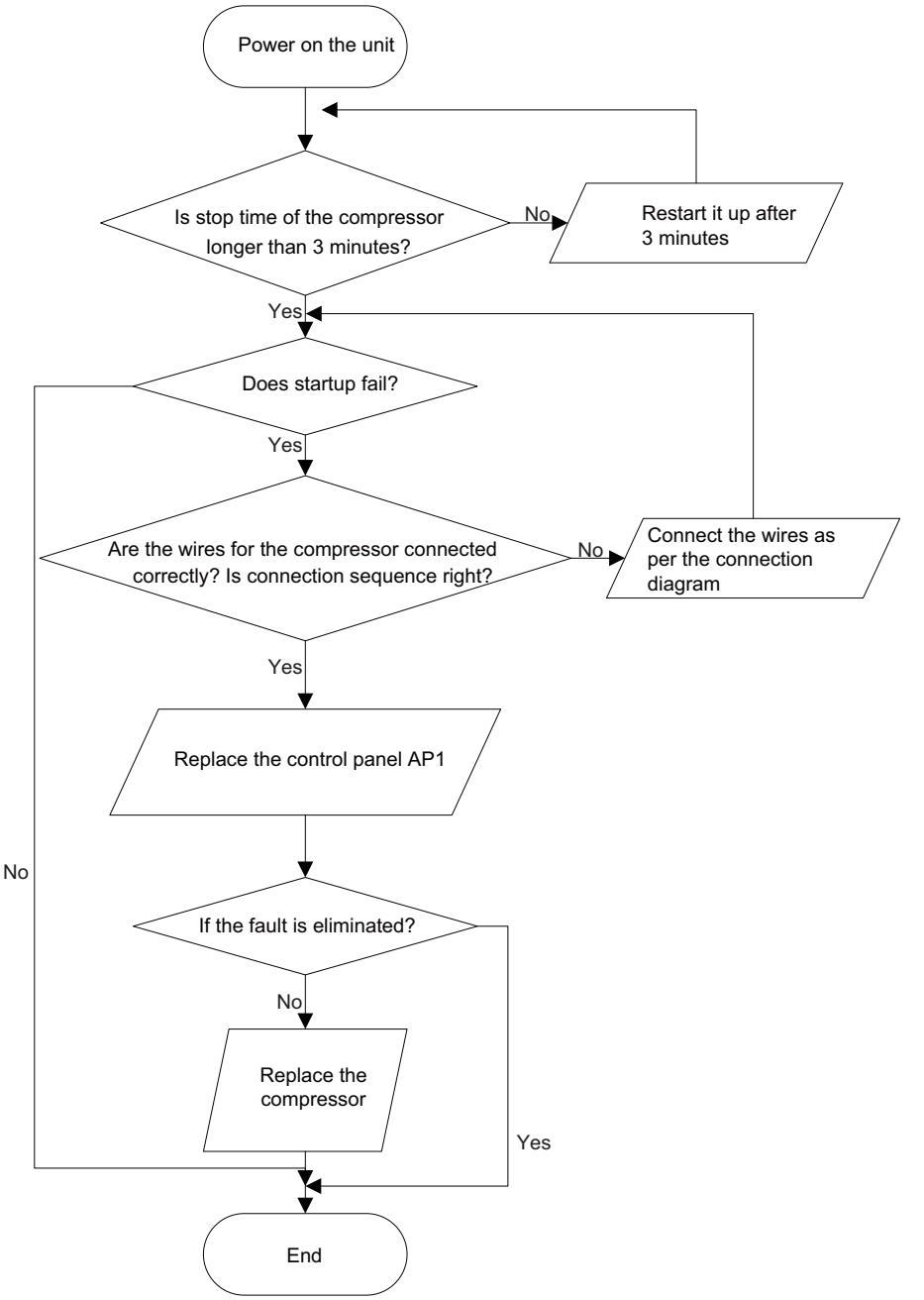

5. Out of step diagnosis for the compressor (AP1 hereinafter refers to the control board of the outdoor unit)

Mainly detect:

●Is the system pressure too high?

●Is the input voltage too low?

Fault diagnosis process:

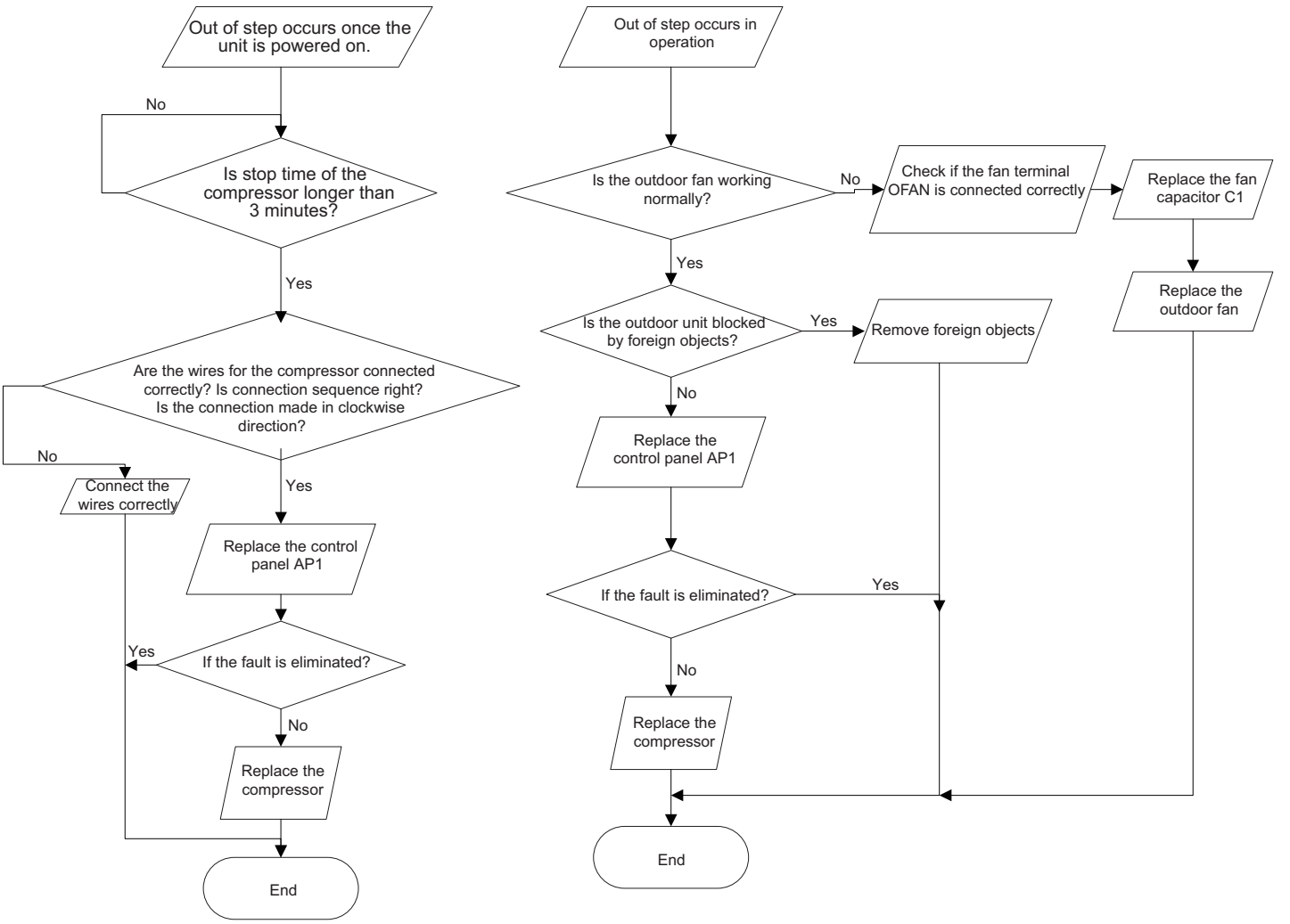

6. Overload and air exhaust malfunction diagnosis (following AP1 for outdoor unit control board)

Mainly detect:

●Is the PMV connected well or not? Is PMV damaged?

●Is refrigerant leaked?

Fault diagnosis process:

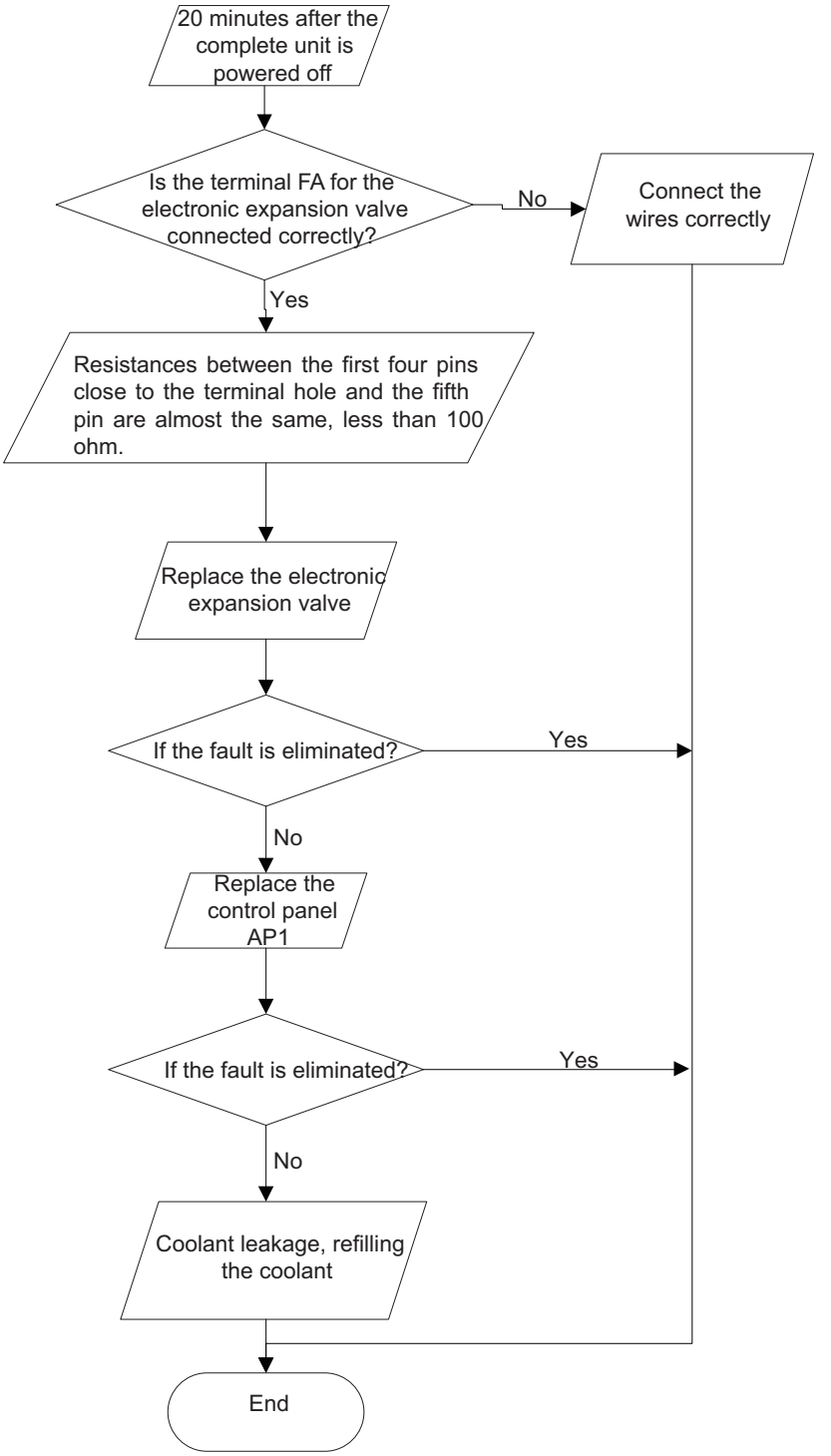

7. Communication malfunction: (following AP1 for outdoor unit control board)

Mainly detect:

●Is there any damage for the indoor unit mainboard communication circuit? Is communication circuit damaged?

●Detect the indoor and outdoor units connection wire and indoor and outdoor units inside wiring is connect well or not, if is there any damage?

Fault diagnosis process:

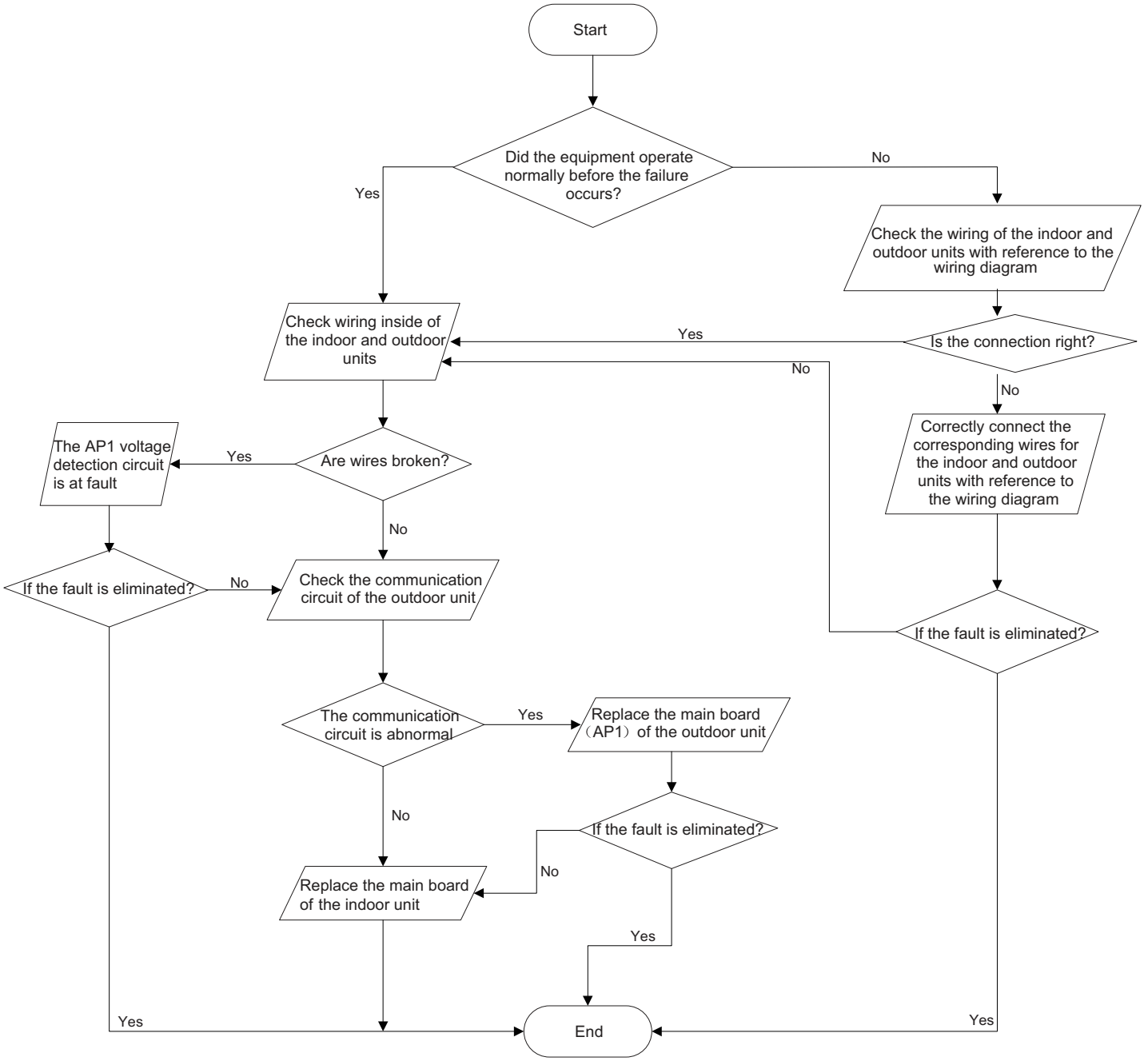

8. Malfunction of Overcurrent Protection

Main detection points:

- Is the supply voltage unstable with big fluctuation?
- Is the supply voltage too low with overload?
- Hardware trouble?

Malfunction diagnosis process:

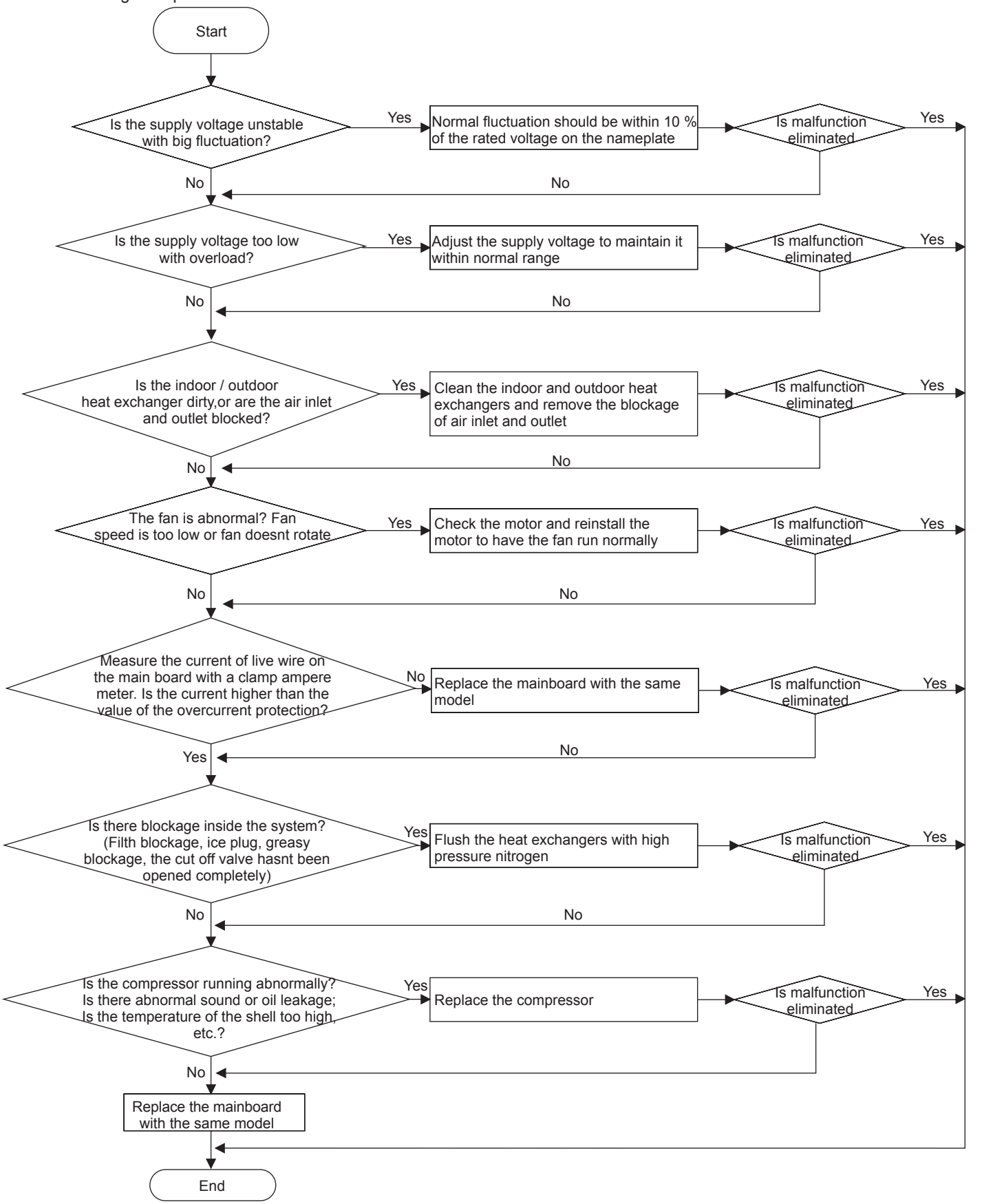

9.3 Maintenance Method for Normal Malfunction

1. Air Conditioner Can't be Started Up

Possible Causes	Discriminating Method (Air conditioner Status)	Troubleshooting
No power supply, or poor connection for power plug	After energization, operation indicator isn't bright and the buzzer can't give out sound	Confirm whether it's due to power failure. If yes, wait for power recovery. If not, check power supply circuit and make sure the power plug is connected well.
Wrong wire connection between indoor unit and outdoor unit, or poor connection for wiring terminals	Under normal power supply circumstances, operation indicator isn't bright after energization	Check the circuit according to circuit diagram and connect wires correctly. Make sure all wiring terminals are connected firmly
Electric leakage for air conditioner	After energization, room circuit breaker trips off at once	Make sure the air conditioner is grounded reliably Make sure wires of air conditioner is connected correctly Check the wiring inside air conditioner. Check whether the insulation layer of power cord is damaged; if yes, place the power cord.
Model selection for air switch is improper	After energization, air switch trips off	Select proper air switch
Malfunction of remote controller	After energization, operation indicator is bright, while no display on remote controller or buttons have no action.	Replace batteries for remote controller Repair or replace remote controller

2. Poor Cooling (Heating) for Air Conditioner

Possible Causes	Discriminating Method (Air conditioner Status)	Troubleshooting
Set temperature is improper	Observe the set temperature on remote controller	Adjust the set temperature
Rotation speed of the IDU fan motor is set too low	Small wind blow	Set the fan speed at high or medium
Filter of indoor unit is blocked	Check the filter to see it's blocked	Clean the filter
Installation position for indoor unit and outdoor unit is improper	Check whether the installation postion is proper according to installation requirement for air conditioner	Adjust the installation position, and install the rainproof and sunproof for outdoor unit
Refrigerant is leaking	Discharged air temperature during cooling is higher than normal discharged wind temperature; Discharged air temperature during heating is lower than normal discharged wind temperature; Unit's pressure is much lower than regulated range	Find out the leakage causes and deal with it. Add refrigerant.
Malfunction of 4-way valve	Blow cold wind during heating	Replace the 4-way valve
Malfunction of capillary	Discharged air temperature during cooling is higher than normal discharged wind temperature; Discharged air temperature during heating is lower than normal discharged wind temperature; Unit't pressure is much lower than regulated range. If refrigerant isn't leaking, part of capillary is blocked	Replace the capillary
Flow volume of valve is insufficient	The pressure of valves is much lower than that stated in the specification	Open the valve completely
Malfunction of horizontal louver	Horizontal louver can't swing	Refer to point 3 of maintenance method for details
Malfunction of the IDU fan motor	The IDU fan motor can't operate	Refer to troubleshooting for H6 for maintenance method in details
Malfunction of the ODU fan motor	The ODU fan motor can't operate	Refer to point 4 of maintenance method for details
Malfunction of compressor	Compressor can't operate	Refer to point 5 of maintenance method for details

3. Horizontal Louver Can't Swing

Possible Causes	Discriminating Method (Air conditioner Status)	Troubleshooting
Wrong wire connection, or poor connection	Check the wiring status according to circuit diagram	Connect wires according to wiring diagram to make sure all wiring terminals are connected firmly
Stepping motor is damaged	Stepping motor can't operate	Repair or replace stepping motor
Main board is damaged	Others are all normal, while horizontal louver can't operate	Replace the main board with the same model

4. ODU Fan Motor Can't Operate

Possible causes	Discriminating method (air conditioner status)	Troubleshooting
Wrong wire connection, or poor connection	Check the wiring status according to circuit diagram	Connect wires according to wiring diagram to make sure all wiring terminals are connected firmly
Capacity of the ODU fan motor is damaged	Measure the capacity of fan capacitor with an universal meter and find that the capacity is out of the deviation range indicated on the nameplate of fan capacitor.	Replace the capacity of fan
Power voltage is a little low or high	Use universal meter to measure the power supply voltage. The voltage is a little high or low	Suggest to equip with voltage regulator
Motor of outdoor unit is damaged	When unit is on, cooling/heating performance is bad and ODU compressor generates a lot of noise and heat.	Change compressor oil and refrigerant. If no better, replace the compressor with a new one

5. Compressor Can't Operate

Possible causes	Discriminating method (air conditioner status)	Troubleshooting
Wrong wire connection, or poor connection	Check the wiring status according to circuit diagram	Connect wires according to wiring diagram to make sure all wiring terminals are connected firmly
Capacity of compressor is damaged	Measure the capacity of fan capacitor with an universal meter and find that the capacity is out of the deviation range indicated on the nameplate of fan capacitor.	Replace the compressor capacitor
Power voltage is a little low or high	Use universal meter to measure the power supply voltage. The voltage is a little high or low	Suggest to equip with voltage regulator
Coil of compressor is burnt out	Use universal meter to measure the resistance between compressor terminals and it's 0	Repair or replace compressor
Cylinder of compressor is blocked	Compressor can't operate	Repair or replace compressor

6. Air Conditioner is Leaking

Possible causes	Discriminating method (air conditioner status)	Troubleshooting
Drain pipe is blocked	Water leaking from indoor unit	Eliminate the foreign objects inside the drain pipe
Drain pipe is broken	Water leaking from drain pipe	Replace drain pipe
Wrapping is not tight	Water leaking from the pipe connection place of indoor unit	Wrap it again and bundle it tightly

7. Abnormal Sound and Vibration

Possible causes	Discriminating method (air conditioner status)	Troubleshooting
When turn on or turn off the unit, the panel and other parts will expand and there's abnormal sound	There's the sound of "PAPA"	Normal phenomenon. Abnormal sound will disappear after a few minutes.
When turn on or turn off the unit, there's abnormal sound due to flow of refrigerant inside air conditioner	Water-running sound can be heard	Normal phenomenon. Abnormal sound will disappear after a few minutes.
Foreign objects inside the indoor unit or there're parts touching together inside the indoor unit	There's abnormal sound fro indoor unit	Remove foreign objects. Adjust all parts' position of indoor unit, tighten screws and stick damping plaster between connected parts
Foreign objects inside the outdoor unit or there're parts touching together inside the outdoor unit	There's abnormal sound fro outdoor unit	Remove foreign objects. Adjust all parts' position of outdoor unit, tighten screws and stick damping plaster between connected parts
Short circuit inside the magnetic coil	During heating, the way valve has abnormal electromagnetic sound	Replace magnetic coil
Abnormal shake of compressor	Outdoor unit gives out abnormal sound	Adjust the support foot mat of compressor, tighten the bolts
Abnormal sound inside the compressor	Abnormal sound inside the compressor	If add too much refrigerant during maintenance, please reduce refrigerant properly. Replace compressor for other circumstances.

11. Removal Procedure

⚠ **Warning: Be sure to wait for a minimum of 20 minutes after turning off all power supplies and discharge the refrigerant completely before removal.**

11.1 Removal Procedure of Indoor Unit

Steps	Procedure
1. Remove panel	
	Pull sliding clasps at both sides of panel, pull out the panel outwards and then move the panel upwards to remove it.
	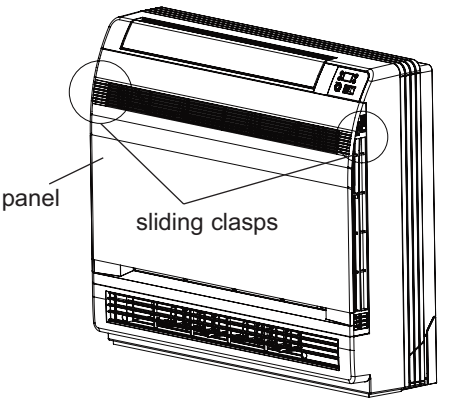
2. Remove filter sub-assy	
	Pull the damping clasps at upper/lower side of filter sub-assy, and then move the filter sub-assy outwards to remove it.
	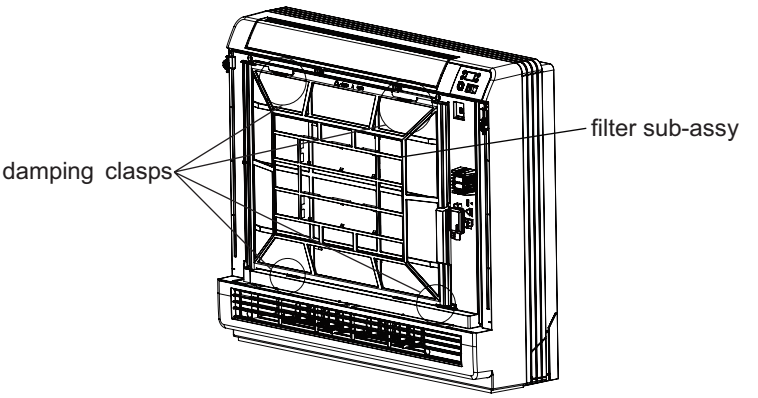
3. Remove test board and front case	
	Remove one screws fixing the test board, and t hen pull the test board outwards to remove it. Remove 4 screws fixing the front case, and then pull the front case outwards to remove it.
	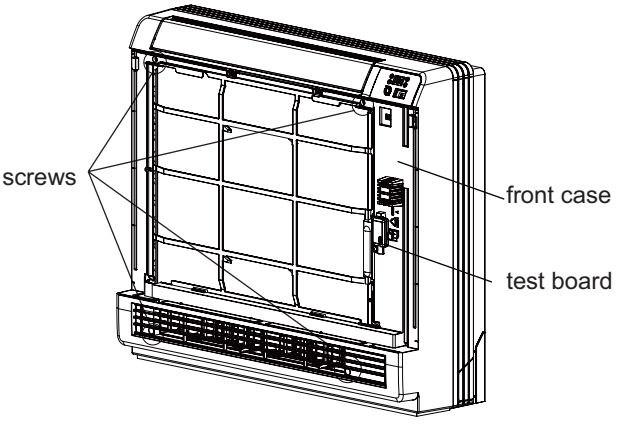

Steps	Procedure
4. Remove swing parts	
	Remove 2 screws fixing the swing parts, and then pull the swing parts outwards to remove it.
	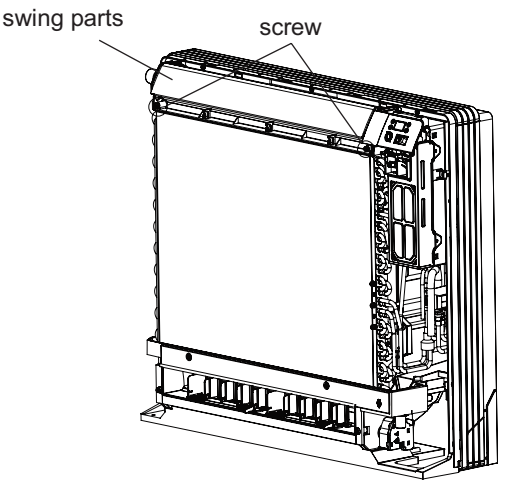
5. Remove water tray	
	Remove 2 screws fixing water tray, and then pull the water tray outwards to remove it.
	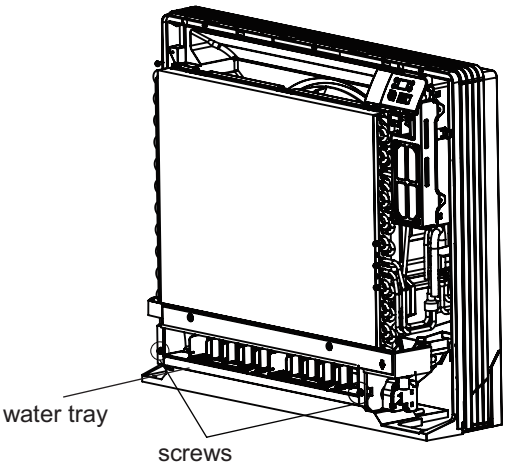
6. Remove electric box	
	Remove one screw fixing the electric box, and then pull the electric box outwards to remove it.
	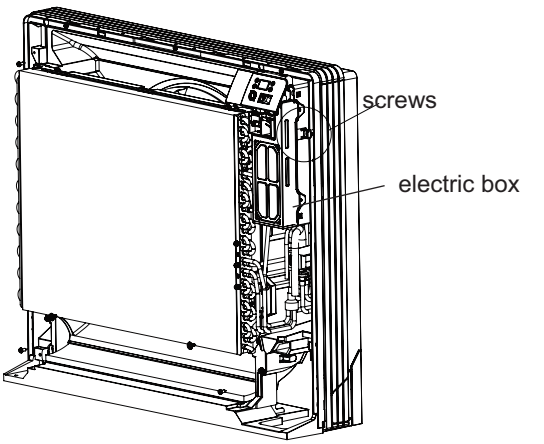

Steps	Procedure
7. Remove fixer of piping	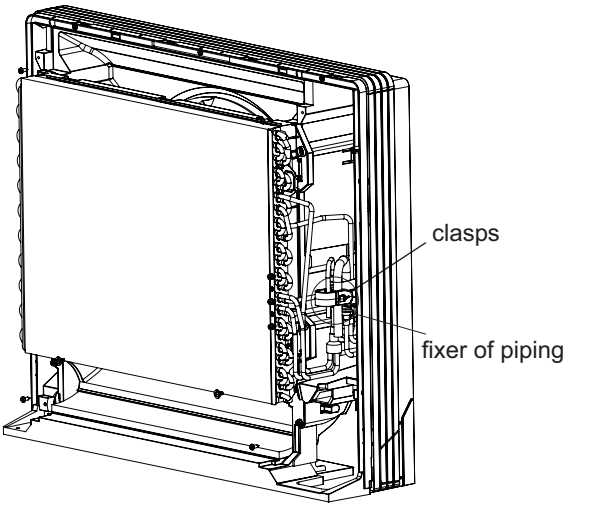
Pry out the clasps connecting fixer of piping and bottom case, and then pull the fixer of piping outwards to remove it.	
8. Remove evaporator	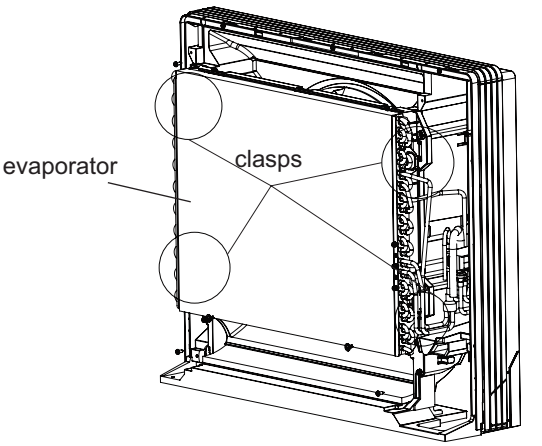
Pry out the clasps connecting evaporator and bottom case, and then pull the evaporator outwards to remove it.	
9. Remove guide ring	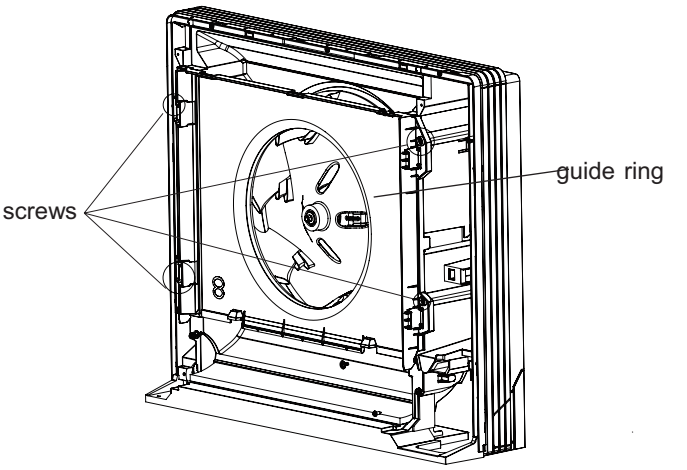
Remove 4 screws fixing guide ring, and then pull the guide ring outwards to remove it.	

Steps	Procedure
10. Remove centrifugal blade	
	Remove one nut fixing the centrifugal blade, and then pull the centrifugal blade outwards to remove it.
	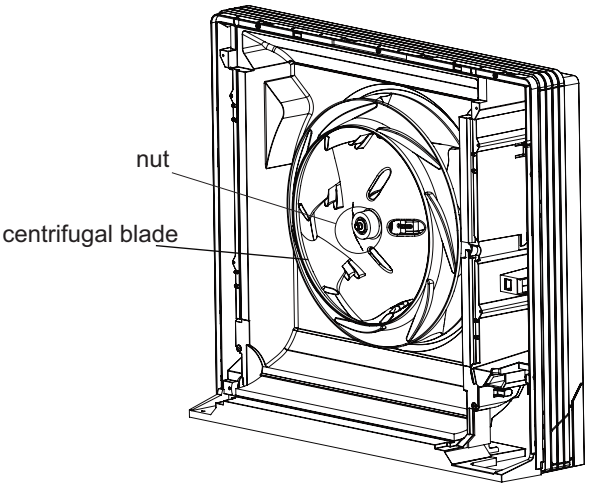
11. Remove fixing bracket of motor	
	Remove 3 nuts on fixing bracket of motor, and then pull the fixing bracket of motor outwards to remove it.
	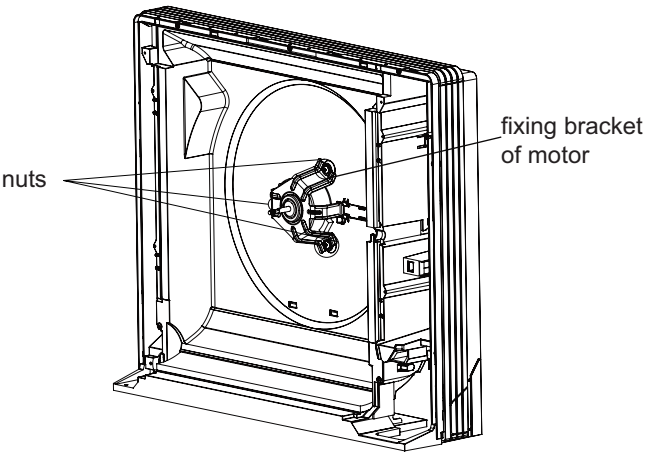
12. Remove press plate of motor wire	
	Loosen clasps between press plate of motor wire and bottom case, and then pull the press plate of motor wire outwards to remove it.
	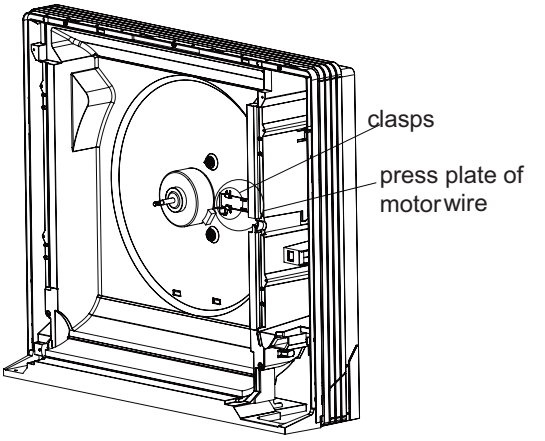

11.2 Removal Procedure of Outdoor Unit

ASP-09BI

Steps	Procedure	
1. Remove big handle		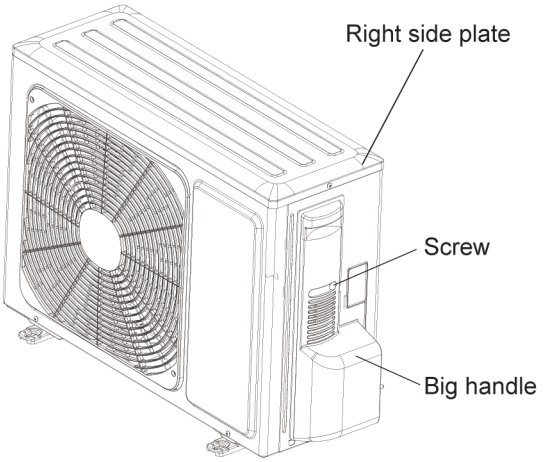
	Remove the screw fixing big handle; slide out the big handle upwards to make the clasp of big handle separate from the groove of right side plate, and then remove the big handle.	
2. Remove top panel		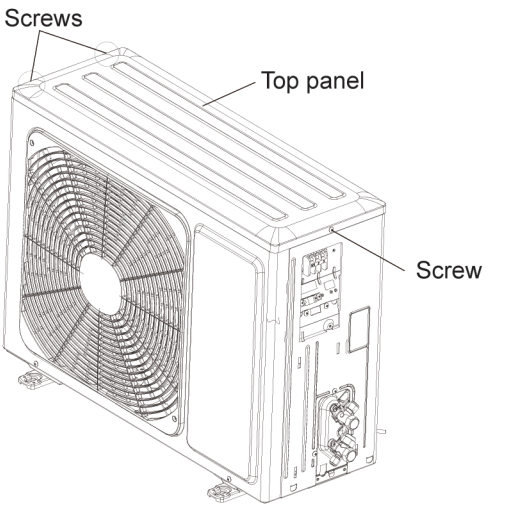
	Remove the screws fixing top panel and then remove the top panel.	
3. Remove front grille		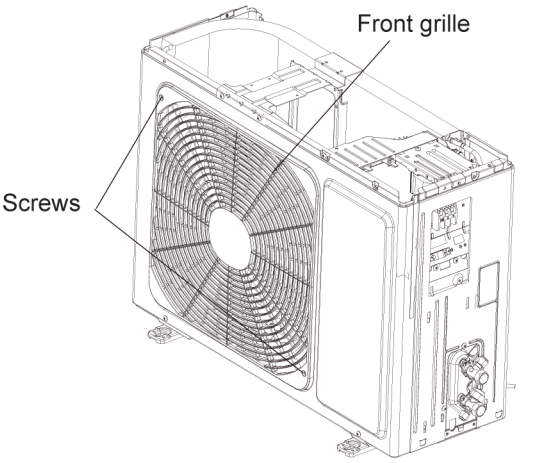
	Remove connection screws between the front grille and the front panel. Then remove the front grille.	

Steps	Procedure
4. Remove front panel Remove the screws fixing front panel,and then remove the front panel.	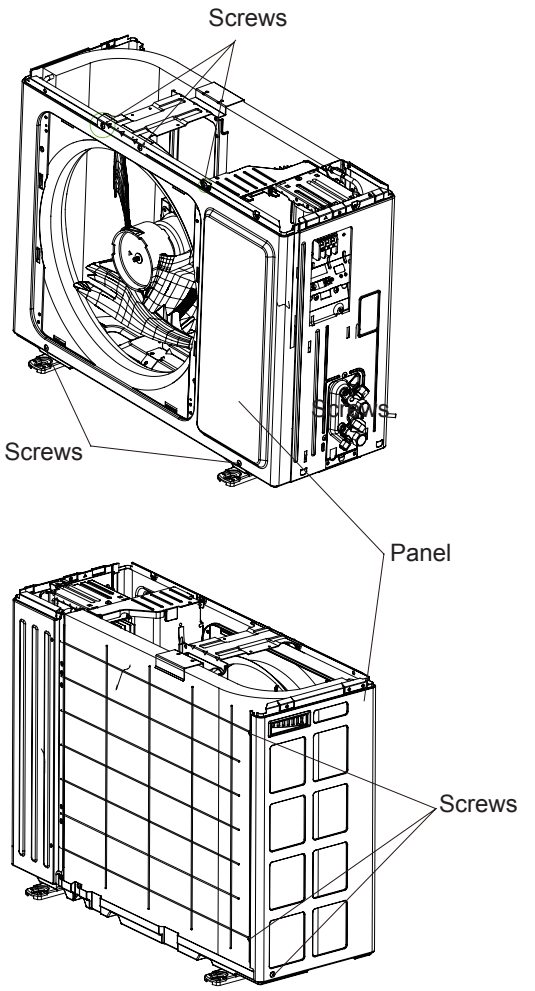
5. Remove axial flow blade Remove the nut fixing axial flow blade and then remove the axial flow blade.	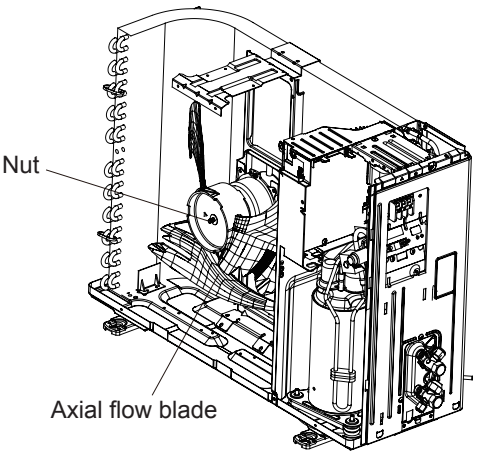

Steps	Procedure
6. Remove protective grille and right side plate	
	Remove the screws 1 fixing protective grille and then remove the protective grille. Remove the screws 2 fixing right side plate and then remove the right side plate.
7. Remove electric box assy	
	Remove the screws fixing electric box assy ; pull out each wiring terminal; lift the electric box assy upwards to remove it. Note: When pulling out the wiring terminal, pay attention to loose the clasp and don't pull it so hard.

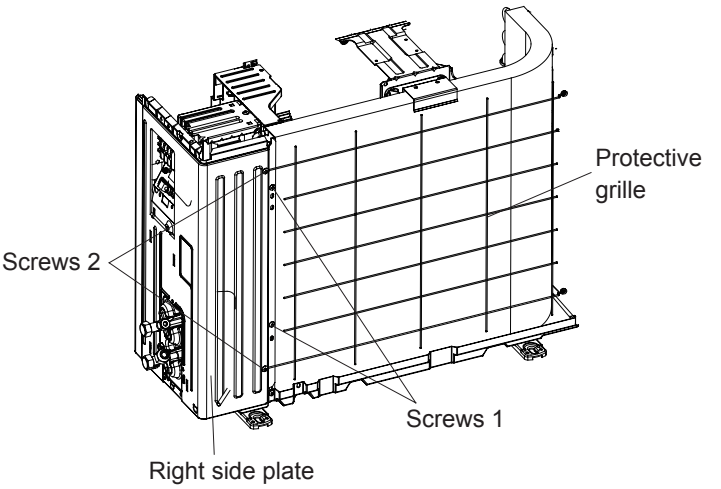

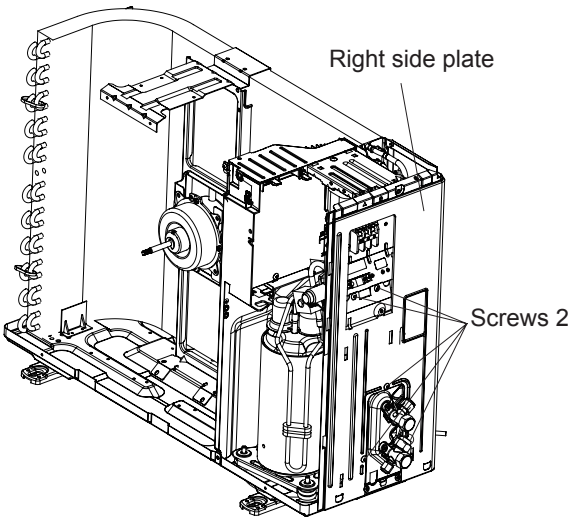

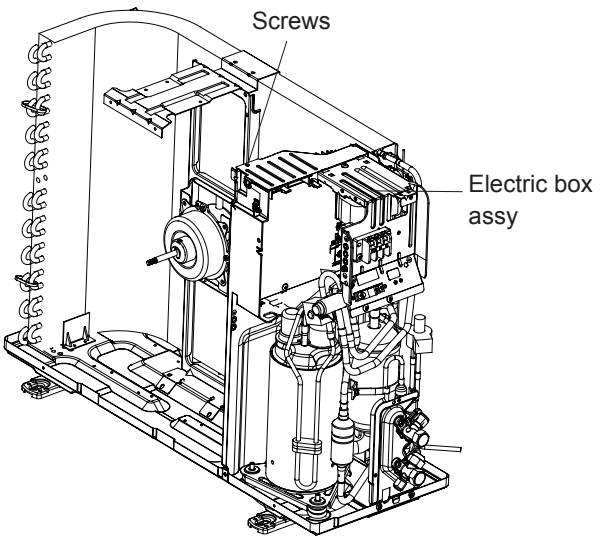

Steps	Procedure
8. Remove 4-way valve assy	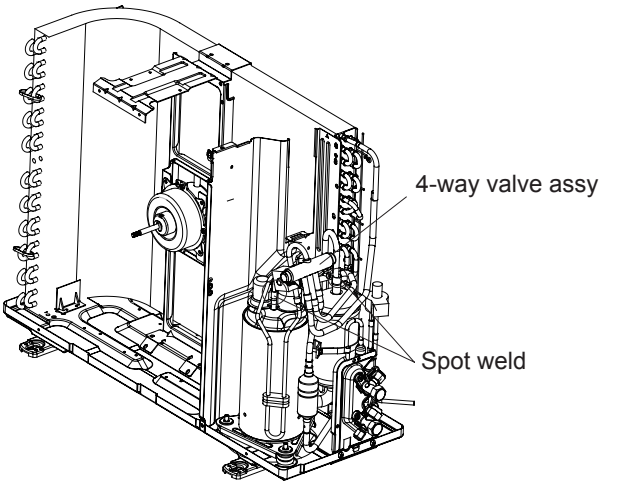
Unsolder the spot weld of 4-way valve assy, compressor and condenser, and then remove the 4-way valve assy . Note: When unsoldering the spot weld, wrap the 4-way valve with wet cloth completely to avoid damaging the valve due to high temperature.	
9. Remove motor	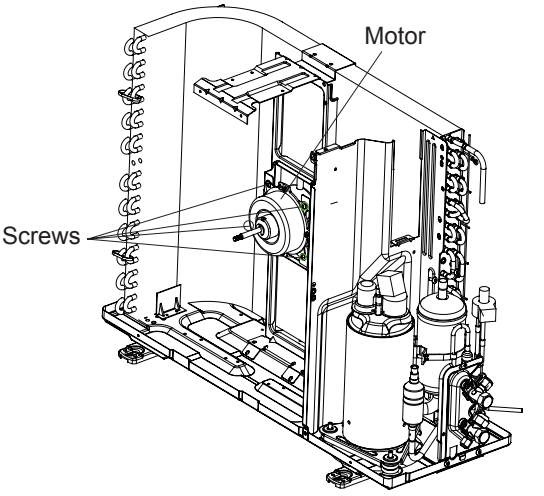
Remove the screws fixing motor and then remove the motor.	
10. Remove motor support	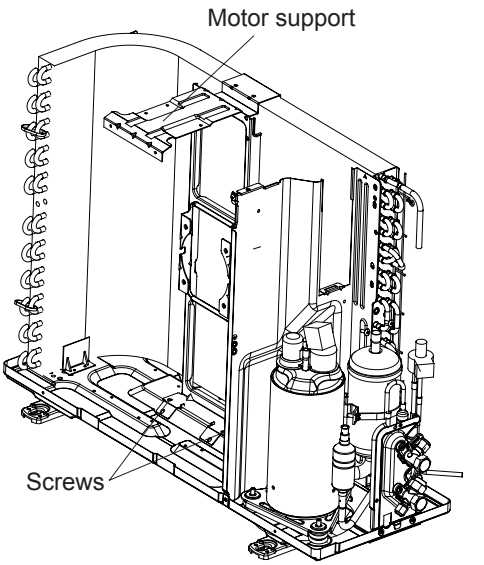
Remove the screws fixing motor support and then remove the motor support.	

Steps	Procedure
11. Remove gas valve and liquid valve	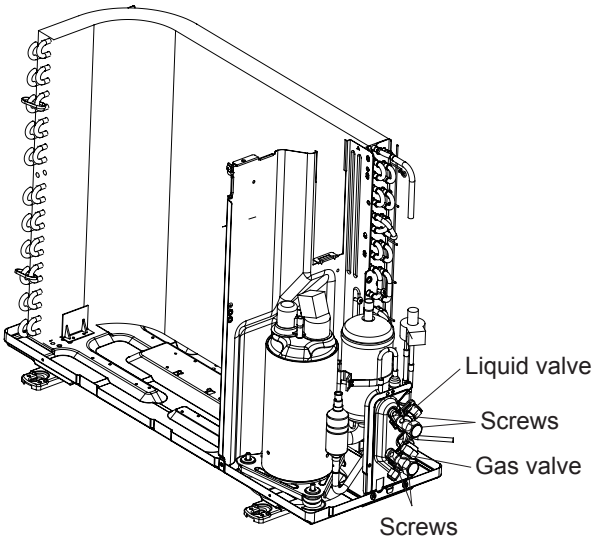
Remove two screws fixing the gas valve, then remove the gas valve. Remove two screws fixing the liquid valve, then remove the liquid valve.	
12. Remove clapboard	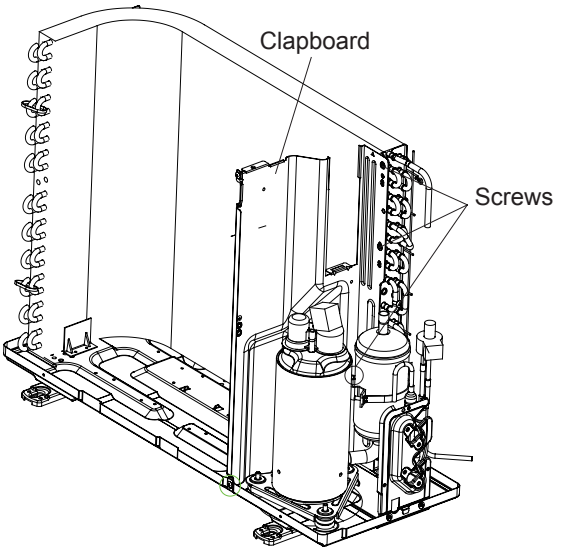
Remove the screws fixing clapboard and then remove the clapboard.	
13. Remove valve support	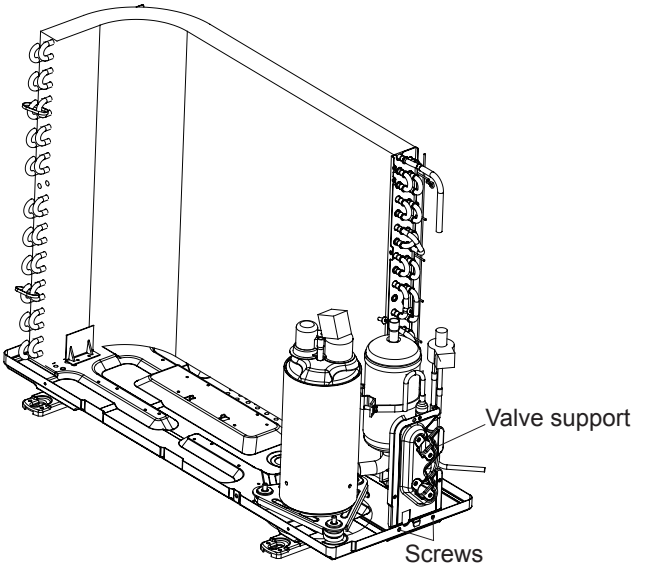
Remove the screws fixing valve support and then remove the valve support.	

Steps	Procedure
14. Remove compressor	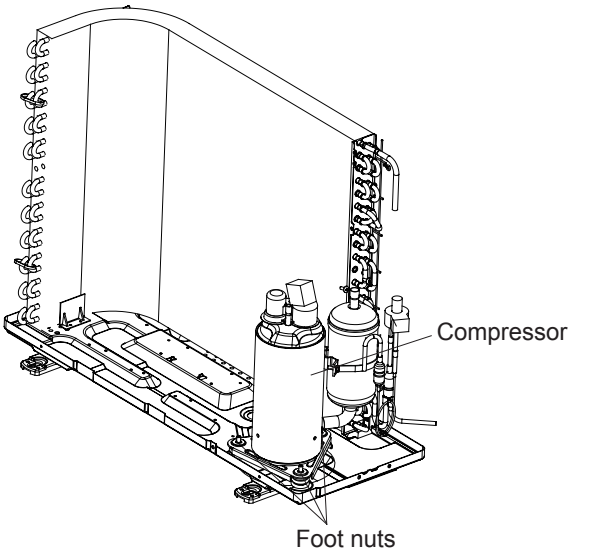
Remove 3 foot nuts on compressor, and then remove the compressor. Note: Protect the ports of discharge pipe and suction pipe to avoid foreign objects to enter it.	
15. Remove condenser	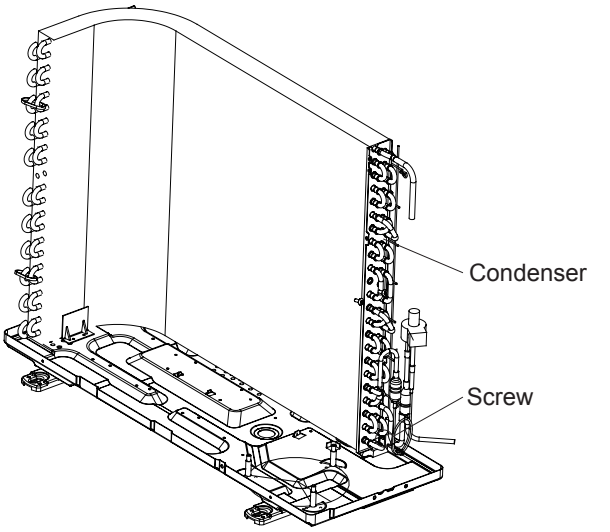
Remove one screw fixing the condenser, then remove the condenser.	

Steps	Procedure
1. Before disassembly	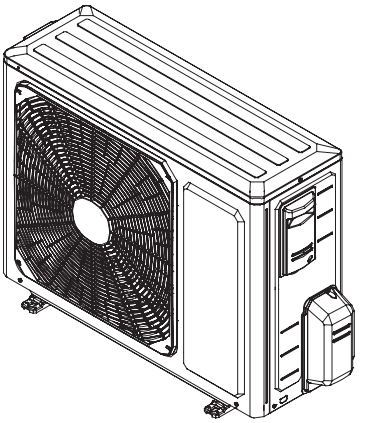
2.Remove big handle and valve cover Remove the connection screw fixing the big handle and then remove the valve cover.	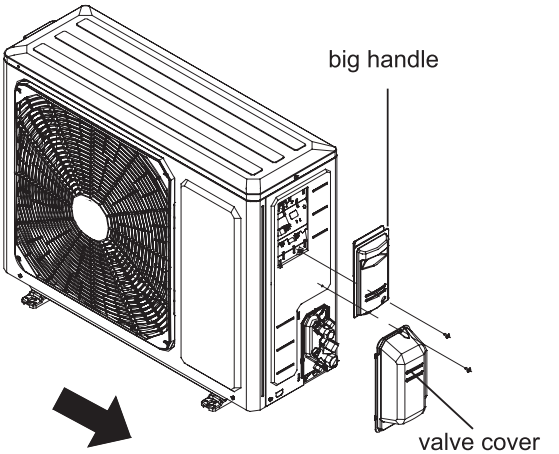
3. Remove top cover Remove connection screws connecting the top panel with the front panel and the right side plate, and then remove the top panel.	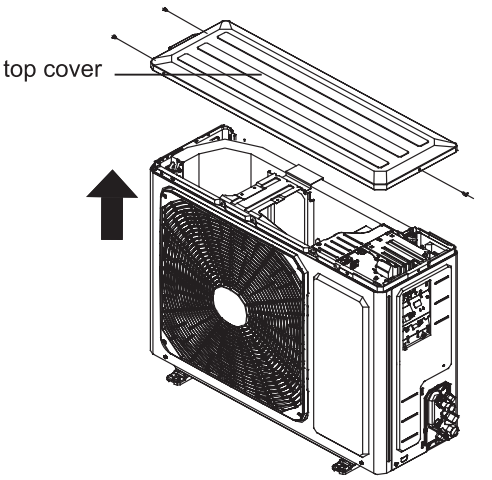

Step	Procedure
4. Remove grille	
	Remove connection screws between the front grille and the front panel. Then remove the grille.
	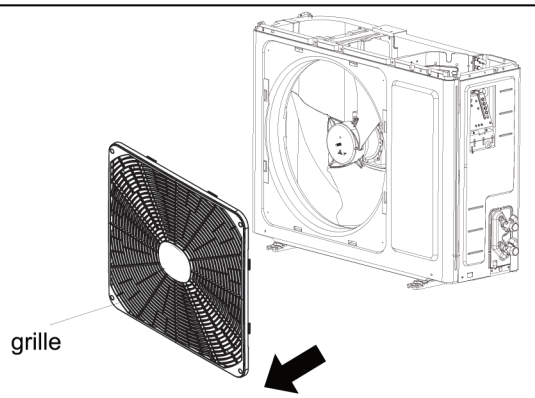
5. Remove front panel	
	Remove connection screws connecting the front panel with the chassis and the motor support and then remove the front panel.
	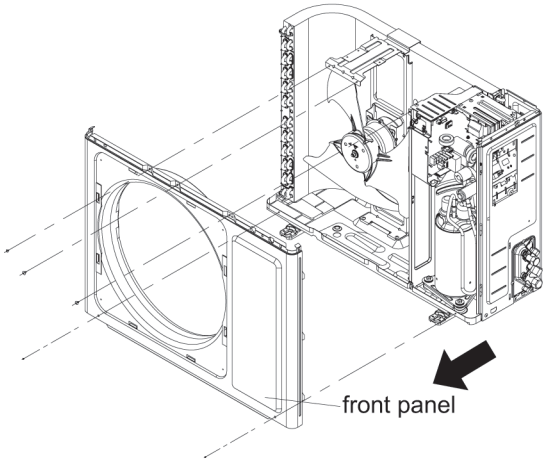
6. Remove right side plate and support plate	
	Remove connection screws connecting the right side plate with the valve support and the electric box. Then remove the right side plate. Remove the two screws fixing the support plate and chassis, and then remove the support plate.
	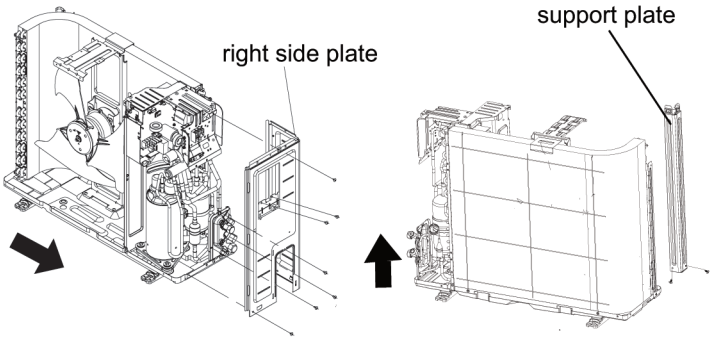
7. Remove axial flow blade	
	Remove the nut on the blade and then remove the axial flow blade.
	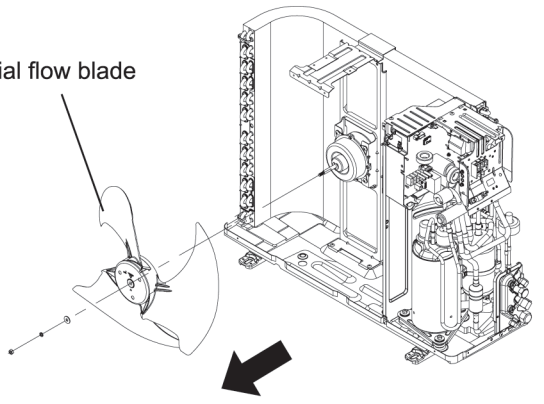

Step	Procedure
8. Remove motor and motor support	
	Remove the tapping screws fixing the motor and disconnect the leading wire insert of the motor. Then remove the motor. Remove the tapping screws fixing the motor support and lift the motor support to remove it.
9. Remove Electric Box Assy	
	Remove screws fixing the electric box subassembly; loosen the wire bundle and unplug the wiring terminals. Then lift the electric box to remove it.
10. Remove isolation sheet	
	Remove the screws fixing the isolation sheet and then remove the isolation sheet.
11. Remove compressor	
a	Unsolder the welding joint connecting the capillary, valves and the outlet pipe of condenser to remove the capillary. Do not block the capillary with welding slag during unsoldering.

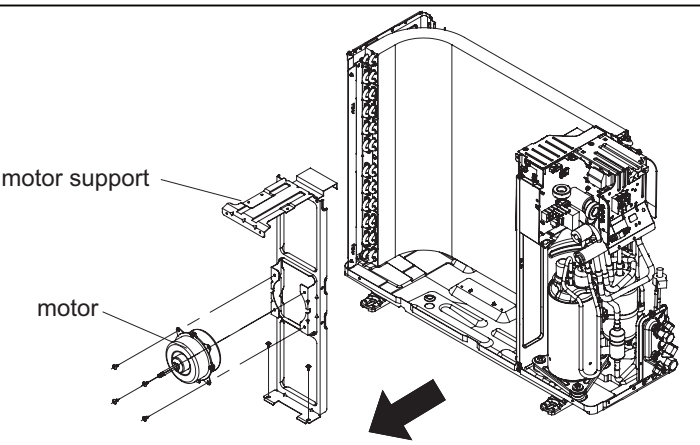

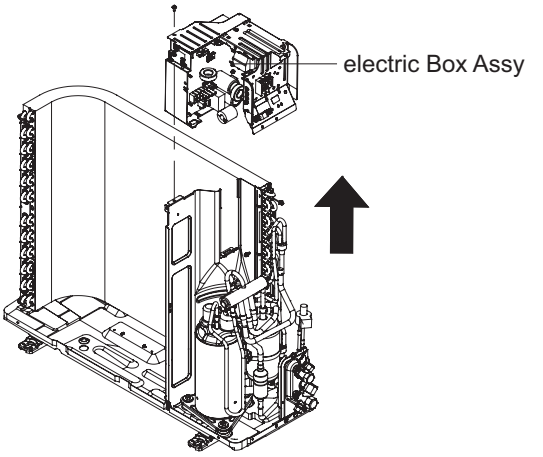

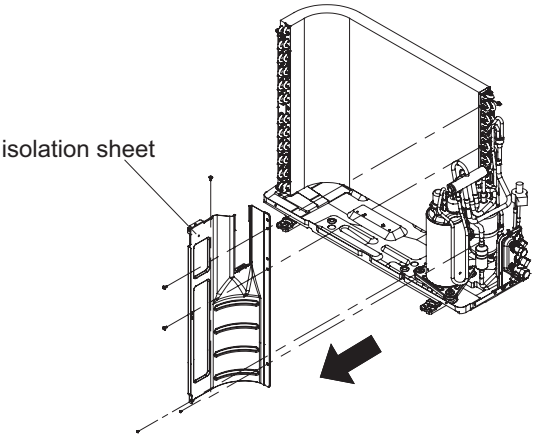

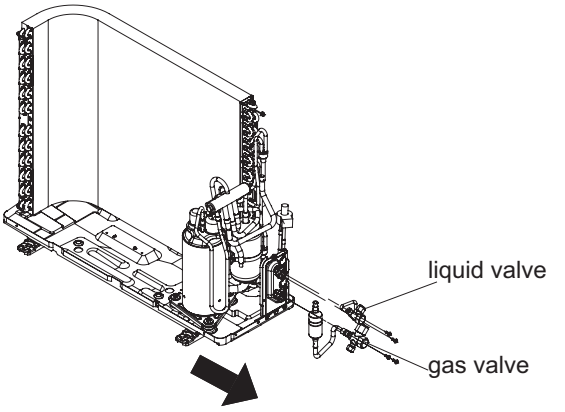

Step	Procedure	
b	Remove the 2 screws fixing the gas valve and unsolder the welding joint between the gas valve and the air-return pipe to remove the gas valve. (NOTE: Discharge the refrigerant completely before unsoldering; when unsoldering, wrap the gas valve with a wet cloth completely to avoid damage to the valve caused by high temperature). Remove the 2 screws fixing the liquid valve and unsolder the welding joint connecting the liquid valve to the Y-type pipe to remove the liquid valve.	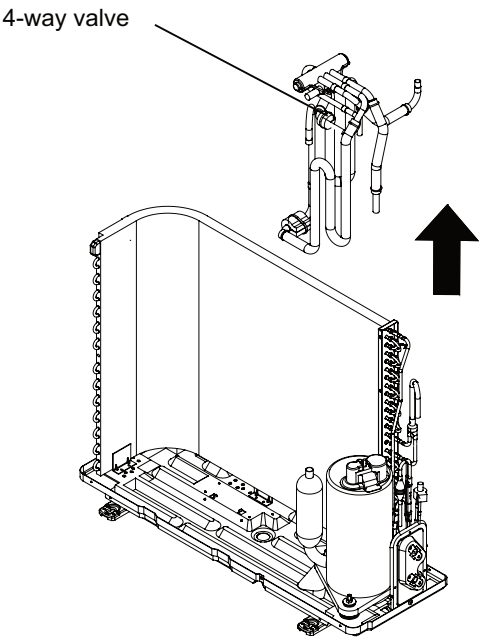
c	Unsolder pipes connecting with compressor.	
d	Remove the 3 foot nuts on the compressor and then remove the compressor.	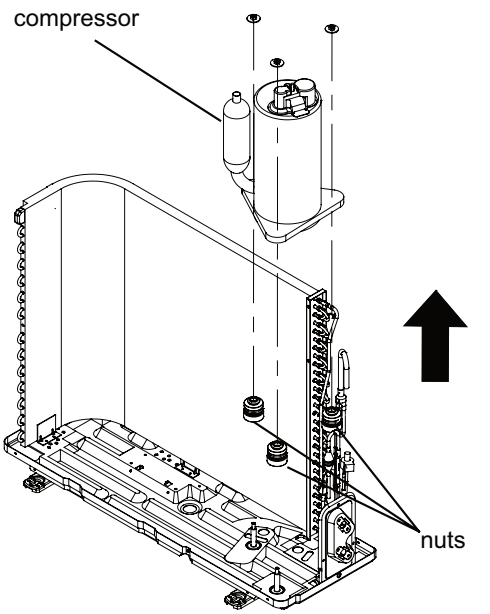

ASP-18BI

Steps	Procedure
1. Remove handle and valve cover	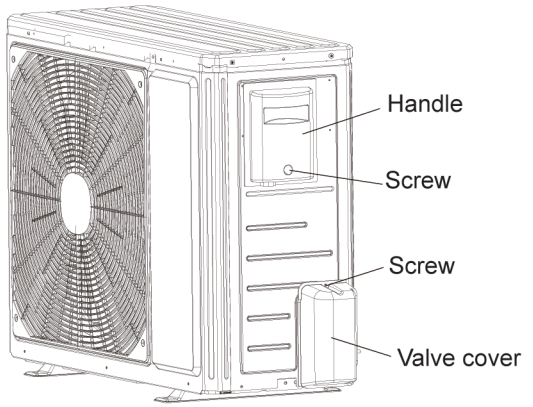
Remove the screws used for fixing the handle and valve cover,pull the handle and valve cover up ward to remove them.	
2. Remove top panel	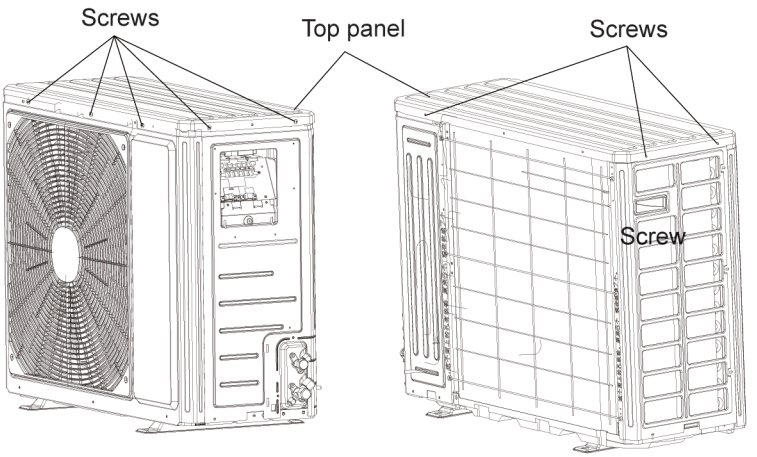
Remove the screws fixing top panel and then remove the top panel.	
3. Remove front grille	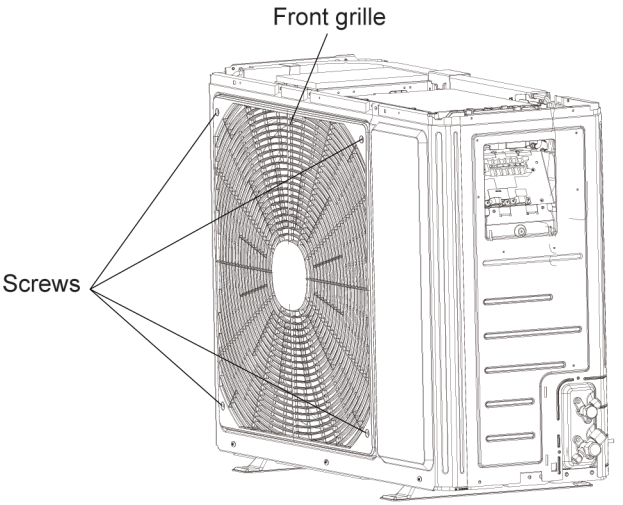
Remove connection screws between the front grille and the front panel. Then remove the front grille.	

Steps	Procedure
4. Remove front panel	
Remove the screws connecting the front panel with the chassis and the motor support, and then remove the front panel.	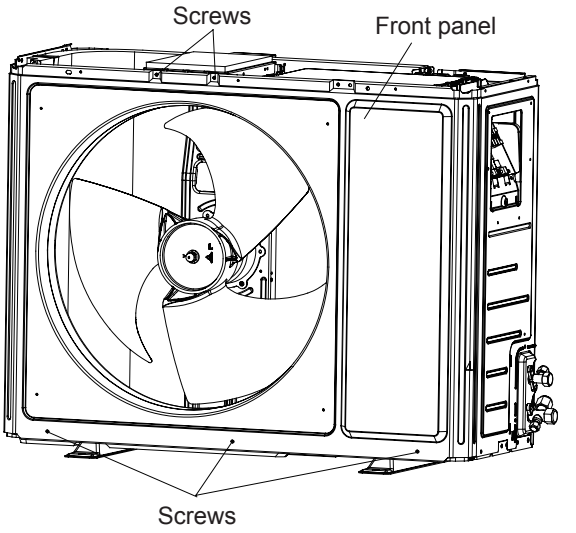
5. Remove rear grill and right side plate	
Remove the screws 1 connecing the left side plate and right side plate and then remove rear grill.	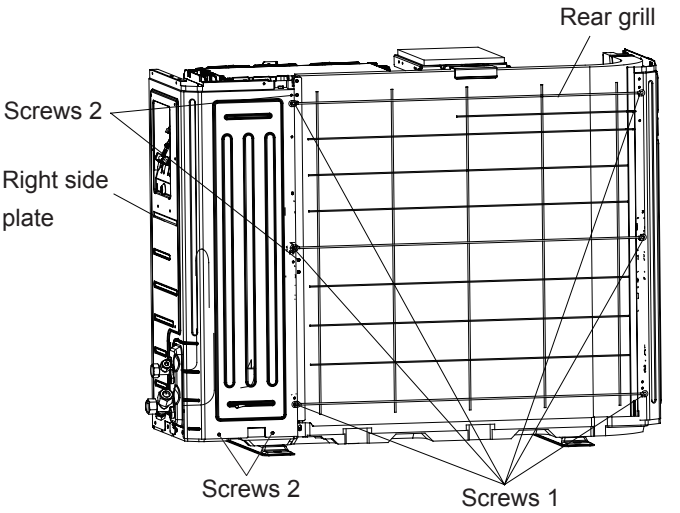
Remove the screws 2 connecting the right side plate with the chassis, the valve support and the electric box, and then remove the right side plate .	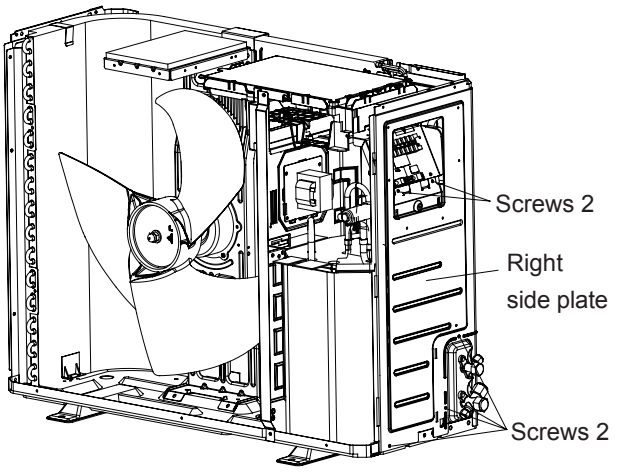

Steps	Procedure
6. Remove left side plate Remove the screws connecting the left side plate and the chassis, and then remove the left side plate.	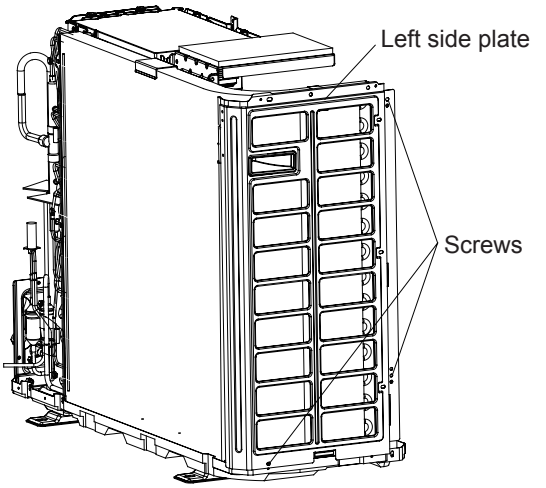
7. Remove axial flow blade Remove the nut fixing the blade and then remove the axial flow blade.	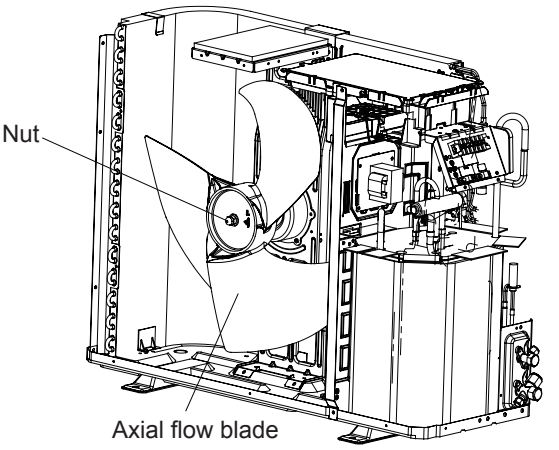
8. Remove motor and motor support Remove the screws fixing motor and then remove the motor. Remove the screws fixing motor support and then remove the motor support.	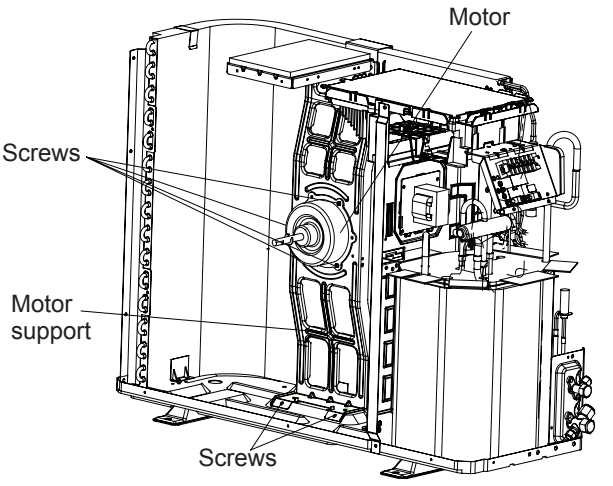

Steps	Procedure
9. Remove electric box assy	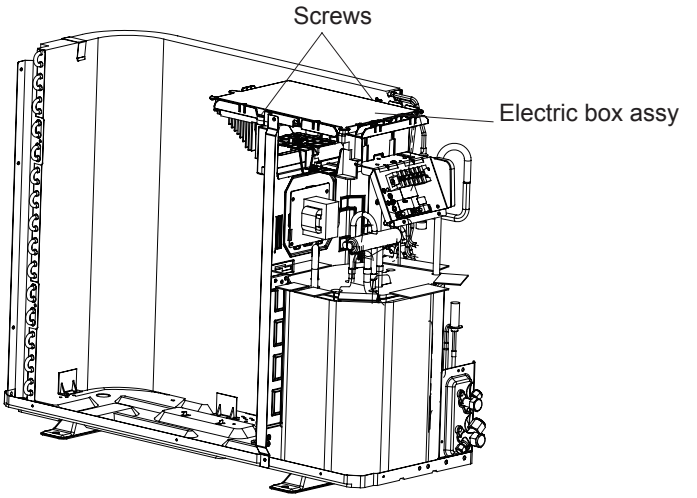
Remove the screws fixing electric box assy ; pull out each wiring terminal; lift the electric box assy upwards to remove it. Note: When pulling out the wiring terminal, pay attention to loose the clasp and don't pull it so hard.	
10. Remove soundproof sponge	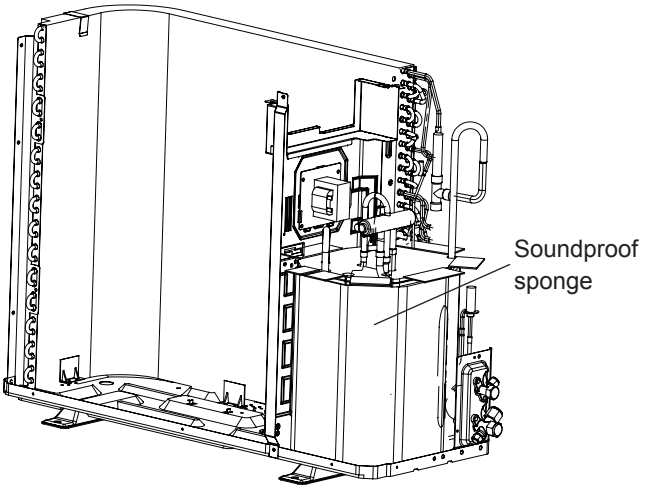
Since the piping ports on the soundproof sponge are torn easily, remove the soundproof sponge carefully.	
11. Remove 4-way valve assy	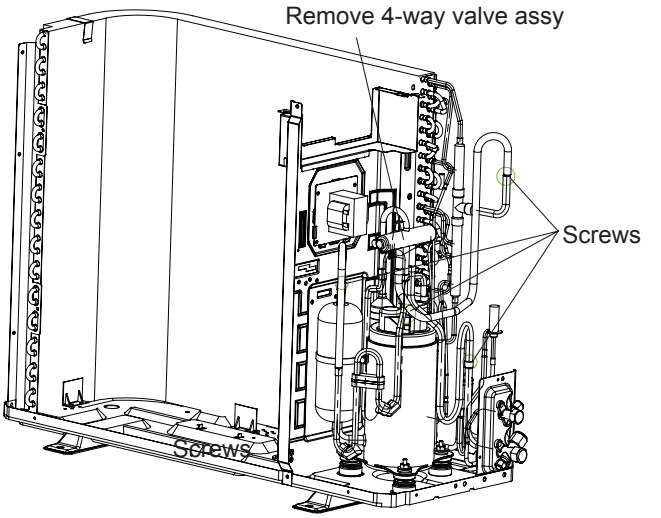
Unsolder the spot weld of 4-way valve assy, compressor and condenser, and then remove the 4-way valve assy . Note: When unsoldering the spot weld, wrap the 4-way valve with wet cloth completely to avoid damaging the valve due to high temperature.	

Steps	Procedure
12. Remove clapboard Remove the screws fixing clapboard and then remove the clapboard.	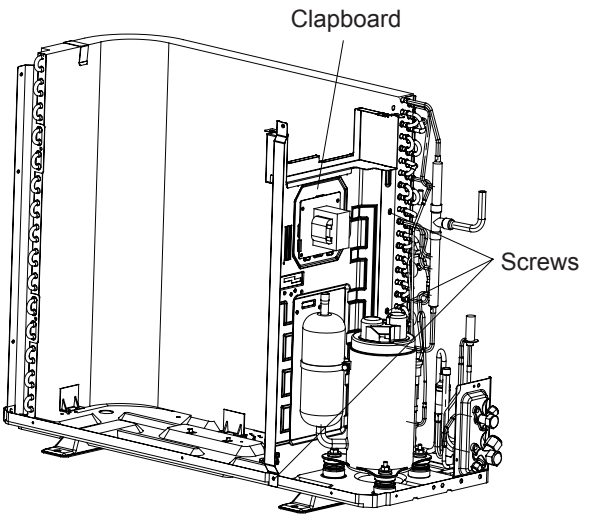
13. Remove gas valve ,liquid valve and valve support Since the piping ports on the soundproof sponge are torn easily, remove the soundproof sponge carefully.	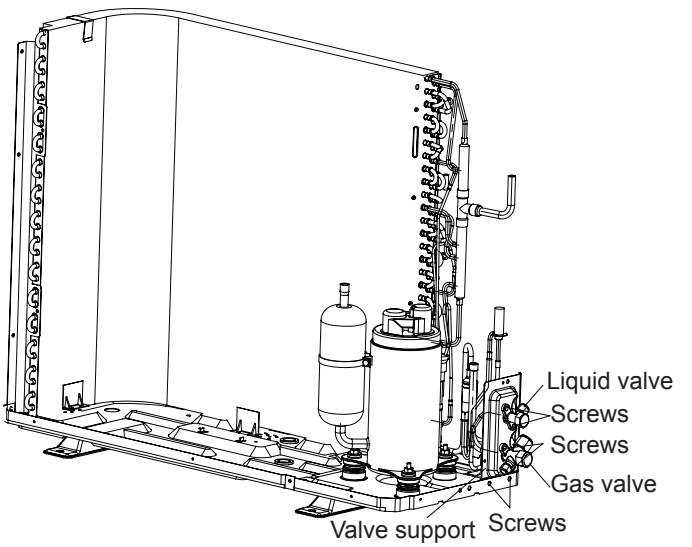
14. Remove compressor Remove 3 foot nuts on compressor, and then remove the compressor. Note: Protect the ports of discharge pipe and suction pipe to avoid foreign objects to enter it.	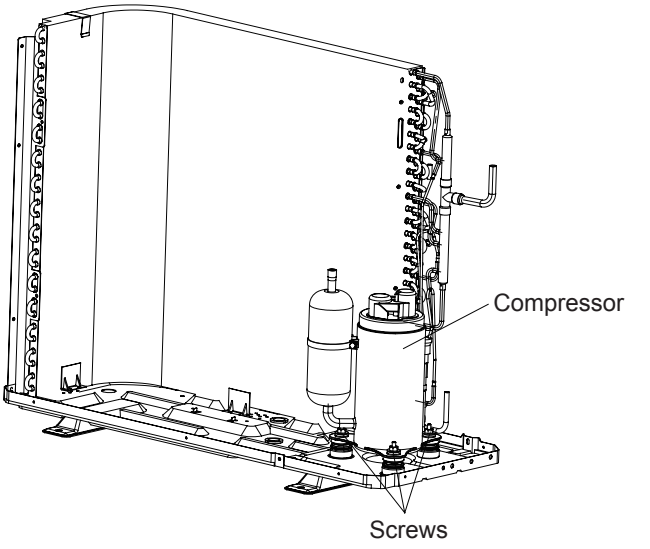

Appendix:

Appendix 1: Reference Sheet of Celsius and Fahrenheit

Conversion formula for Fahrenheit degree and Celsius degree: Tf=Tcx1.8+32

Set temperature

Fahrenheit display temperature (℉)	Fahrenheit (℉)	Celsius (℃)		Fahrenheit display temperature (℉)	Fahrenheit (℉)	Celsius (℃)		Fahrenheit display temperature (℉)	Fahrenheit (℉)	Celsius (℃)
61	60.8	16		69/70	69.8	21		78/79	78.8	26
62/63	62.6	17		71/72	71.6	22		80/81	80.6	27
64/65	64.4	18		73/74	73.4	23		82/83	82.4	28
66/67	66.2	19		75/76	75.2	24		84/85	84.2	29
68	68	20		77	77	25		86	86	30

Ambient temperature

Fahrenheit display temperature (℉)	Fahrenheit (℉)	Celsius (℃)		Fahrenheit display temperature (℉)	Fahrenheit (℉)	Celsius (℃)		Fahrenheit display temperature (℉)	Fahrenheit (℉)	Celsius (℃)
32/33	32	0		55/56	55.4	13		79/80	78.8	26
34/35	33.8	1		57/58	57.2	14		81	80.6	27
36	35.6	2		59/60	59	15		82/83	82.4	28
37/38	37.4	3		61/62	60.8	16		84/85	84.2	29
39/40	39.2	4		63	62.6	17		86/87	86	30
41/42	41	5		64/65	64.4	18		88/89	87.8	31
43/44	42.8	6		66/67	66.2	19		90	89.6	32
45	44.6	7		68/69	68	20		91/92	91.4	33
46/47	46.4	8		70/71	69.8	21		93/94	93.2	34
48/49	48.2	9		72	71.6	22		95/96	95	35
50/51	50	10		73/74	73.4	23		97/98	96.8	36
52/53	51.8	11		75/76	75.2	24		99	98.6	37
54	53.6	12		77/78	77	25				

Appendix 2: Configuration of Connection Pipe

1.Standard length of connection pipe

● 5m, 7.5m, 8m.

2.Min length of connection pipeFor the unit with standard connection pipe of 5m, there is no limitation for themin length of connection pipe. For the unit with standard connection pipe of 7.5m and 8m, the min length of connection pipe is 3m.

3.Max length of connection pipe（More details please refer to the specifications）

4.The additional refrigerant oil and refrigerant charging required after prolonging connection pipe

● After the length of connection pipe is prolonged for 10m at the basis of standard length, you should add 5ml of refrigerant oil for each additional 5m of connection pipe.

● The calculation method of additional refrigerant charging amount (on the basis of liquid pipe):

● Basing on the length of standard pipe, add refrigerant according to the requirement as shown in the table. The additional refrigerant charging amount per meter is different according to the diameter of liquid pipe. See Sheet 2.

● Additional refrigerant charging amount = prolonged length of liquid pipe X additional refrigerant charging amount per meter

Additional refrigerant charging amount for R32				
Diameter of connection pipe		Indoor unit throttl	Outdoor unit throttle	
Liquid pipe	Gas pipe	Cooling only,cooling and heating(g / m)	Cooling only(g / m)	Cooling and heating(g / m)
Φ6	Φ9.5 or Φ12	16	12	16
Φ6 or Φ9.5	Φ16 or Φ19	40	12	40
Φ12	Φ19 or Φ22.2	80	24	96
Φ16	Φ25.4 or Φ31.8	136	48	96
Φ19	/	200	200	200
Φ22.2	/	280	280	280

Note: The additional refrigerant charging amount in Sheet 2 is recommendedvalue, not compulsory.

Appendix 3: Pipe Expanding Method

⚠ **Note:**

Improper pipe expanding is the main cause of refrigerant leakage.Please expand the pipe according to the following steps:

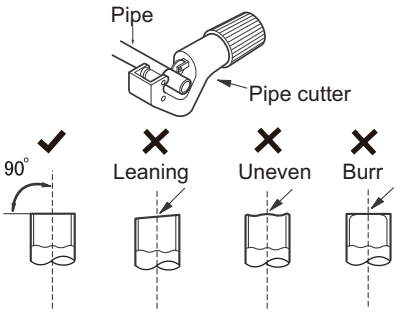

A:Cut the pip
- Confirm the pipe length according to the distance of indoor unit and outdoor unit.
- Cut the required pipe with pipe cutter.

B:Remove the burrs
- Remove the burrs with shaper and prevent the burrs from getting into the pipe.

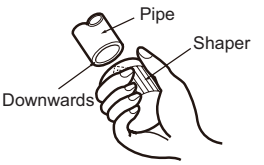

C:Put on suitable insulating pipe

D:Put on the union nut
- Remove the union nut on the indoor connection pipe and outdoor valve; install the union nut on the pipe.

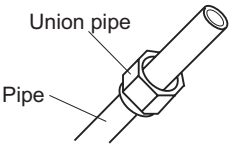

E:Expand the port
- Expand the port with expander.

⚠ **Note:**

- "A" is different according to the diameter, please refer to the sheet below:

Outer diameter(mm)	A(mm)	
	Max	Min
Φ6 - 6.35 (1/4")	1.3	0.7
Φ9.52 (3/8”)	1.6	1.0
Φ12 - 12.70 (1/2”)	1.8	1.0
Φ16 - 15.88 (5/8”)	2.4	2.2

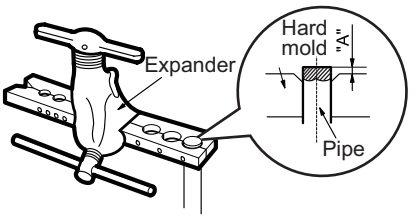

F:Inspection
- Check the quality of expanding port. If there is any blemish, expand the port again according to the steps above.

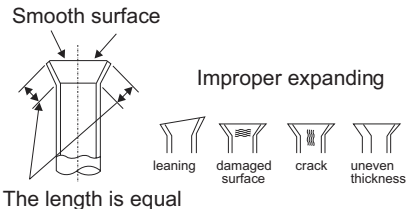

Appendix 4: List of Resistance for Temperature Sensor

Resistance Table of Ambient Temperature Sensor for Indoor and Outdoor Units(15K)

Temp(°C)	Resistance(kΩ)		Temp(°C)	Resistance(kΩ)		Temp(°C)	Resistance(kΩ)		Temp(°C)	Resistance(kΩ)
-19	138.1		20	18.75		59	3.848		98	1.071
-18	128.6		21	17.93		60	3.711		99	1.039
-17	121.6		22	17.14		61	3.579		100	1.009
-16	115		23	16.39		62	3.454		101	0.98
-15	108.7		24	15.68		63	3.333		102	0.952
-14	102.9		25	15		64	3.217		103	0.925
-13	97.4		26	14.36		65	3.105		104	0.898
-12	92.22		27	13.74		66	2.998		105	0.873
-11	87.35		28	13.16		67	2.896		106	0.848
-10	82.75		29	12.6		68	2.797		107	0.825
-9	78.43		30	12.07		69	2.702		108	0.802
-8	74.35		31	11.57		70	2.611		109	0.779
-7	70.5		32	11.09		71	2.523		110	0.758
-6	66.88		33	10.63		72	2.439		111	0.737
-5	63.46		34	10.2		73	2.358		112	0.717
-4	60.23		35	9.779		74	2.28		113	0.697
-3	57.18		36	9.382		75	2.206		114	0.678
-2	54.31		37	9.003		76	2.133		115	0.66
-1	51.59		38	8.642		77	2.064		116	0.642
0	49.02		39	8.297		78	1.997		117	0.625
1	46.6		40	7.967		79	1.933		118	0.608
2	44.31		41	7.653		80	1.871		119	0.592
3	42.14		42	7.352		81	1.811		120	0.577
4	40.09		43	7.065		82	1.754		121	0.561
5	38.15		44	6.791		83	1.699		122	0.547
6	36.32		45	6.529		84	1.645		123	0.532
7	34.58		46	6.278		85	1.594		124	0.519
8	32.94		47	6.038		86	1.544		125	0.505
9	31.38		48	5.809		87	1.497		126	0.492
10	29.9		49	5.589		88	1.451		127	0.48
11	28.51		50	5.379		89	1.408		128	0.467
12	27.18		51	5.197		90	1.363		129	0.456
13	25.92		52	4.986		91	1.322		130	0.444
14	24.73		53	4.802		92	1.282		131	0.433
15	23.6		54	4.625		93	1.244		132	0.422
16	22.53		55	4.456		94	1.207		133	0.412
17	21.51		56	4.294		95	1.171		134	0.401
18	20.54		57	4.139		96	1.136		135	0.391
19	19.63		58	3.99		97	1.103		136	0.382

Resistance Table of Tube Temperature Sensors for Outdoor and Indoor(20K)

Temp(°C)	Resistance(kΩ)		Temp(°C)	Resistance(kΩ)		Temp(°C)	Resistance(kΩ)		Temp(°C)	Resistance(kΩ)
-19	181.4		20	25.01		59	5.13		98	1.427
-18	171.4		21	23.9		60	4.948		99	1.386
-17	162.1		22	22.85		61	4.773		100	1.346
-16	153.3		23	21.85		62	4.605		101	1.307
-15	145		24	20.9		63	4.443		102	1.269
-14	137.2		25	20		64	4.289		103	1.233
-13	129.9		26	19.14		65	4.14		104	1.198
-12	123		27	18.13		66	3.998		105	1.164
-11	116.5		28	17.55		67	3.861		106	1.131
-10	110.3		29	16.8		68	3.729		107	1.099
-9	104.6		30	16.1		69	3.603		108	1.069
-8	99.13		31	15.43		70	3.481		109	1.039
-7	94		32	14.79		71	3.364		110	1.01
-6	89.17		33	14.18		72	3.252		111	0.983
-5	84.61		34	13.59		73	3.144		112	0.956
-4	80.31		35	13.04		74	3.04		113	0.93
-3	76.24		36	12.51		75	2.94		114	0.904
-2	72.41		37	12		76	2.844		115	0.88
-1	68.79		38	11.52		77	2.752		116	0.856
0	65.37		39	11.06		78	2.663		117	0.833
1	62.13		40	10.62		79	2.577		118	0.811
2	59.08		41	10.2		80	2.495		119	0.77
3	56.19		42	9.803		81	2.415		120	0.769
4	53.46		43	9.42		82	2.339		121	0.746
5	50.87		44	9.054		83	2.265		122	0.729
6	48.42		45	8.705		84	2.194		123	0.71
7	46.11		46	8.37		85	2.125		124	0.692
8	43.92		47	8.051		86	2.059		125	0.674
9	41.84		48	7.745		87	1.996		126	0.658
10	39.87		49	7.453		88	1.934		127	0.64
11	38.01		50	7.173		89	1.875		128	0.623
12	36.24		51	6.905		90	1.818		129	0.607
13	34.57		52	6.648		91	1.736		130	0.592
14	32.98		53	6.403		92	1.71		131	0.577
15	31.47		54	6.167		93	1.658		132	0.563
16	30.04		55	5.942		94	1.609		133	0.549
17	28.68		56	5.726		95	1.561		134	0.535
18	27.39		57	5.519		96	1.515		135	0.521
19	26.17		58	5.32		97	1.47		136	0.509

Resistance Table of Discharge Temperature Sensor for Outdoor(50K)

Temp(°C)	Resistance(kΩ)		Temp(°C)	Resistance(kΩ)		Temp(°C)	Resistance(kΩ)		Temp(°C)	Resistance(kΩ)
-29	853.5		10	98		49	18.34		88	4.75
-28	799.8		11	93.42		50	17.65		89	4.61
-27	750		12	89.07		51	16.99		90	4.47
-26	703.8		13	84.95		52	16.36		91	4.33
-25	660.8		14	81.05		53	15.75		92	4.20
-24	620.8		15	77.35		54	15.17		93	4.08
-23	580.6		16	73.83		55	14.62		94	3.96
-22	548.9		17	70.5		56	14.09		95	3.84
-21	516.6		18	67.34		57	13.58		96	3.73
-20	486.5		19	64.33		58	13.09		97	3.62
-19	458.3		20	61.48		59	12.62		98	3.51
-18	432		21	58.77		60	12.17		99	3.41
-17	407.4		22	56.19		61	11.74		100	3.32
-16	384.5		23	53.74		62	11.32		101	3.22
-15	362.9		24	51.41		63	10.93		102	3.13
-14	342.8		25	49.19		64	10.54		103	3.04
-13	323.9		26	47.08		65	10.18		104	2.96
-12	306.2		27	45.07		66	9.83		105	2.87
-11	289.6		28	43.16		67	9.49		106	2.79
-10	274		29	41.34		68	9.17		107	2.72
-9	259.3		30	39.61		69	8.85		108	2.64
-8	245.6		31	37.96		70	8.56		109	2.57
-7	232.6		32	36.38		71	8.27		110	2.50
-6	220.5		33	34.88		72	7.99		111	2.43
-5	209		34	33.45		73	7.73		112	2.37
-4	198.3		35	32.09		74	7.47		113	2.30
-3	199.1		36	30.79		75	7.22		114	2.24
-2	178.5		37	29.54		76	7.00		115	2.18
-1	169.5		38	28.36		77	6.76		116	2.12
0	161		39	27.23		78	6.54		117	2.07
1	153		40	26.15		79	6.33		118	2.02
2	145.4		41	25.11		80	6.13		119	1.96
3	138.3		42	24.13		81	5.93		120	1.91
4	131.5		43	23.19		82	5.75		121	1.86
5	125.1		44	22.29		83	5.57		122	1.82
6	119.1		45	21.43		84	5.39		123	1.77
7	113.4		46	20.6		85	5.22		124	1.73
8	108		47	19.81		86	5.06		125	1.68
9	102.8		48	19.06		87	4.90		126	1.64

PARTS GUIDE

CONSOLE SERIES

ASP-xxBI

sinclair
AIR CONDITIONING

ASP-09BI INDOOR UNIT

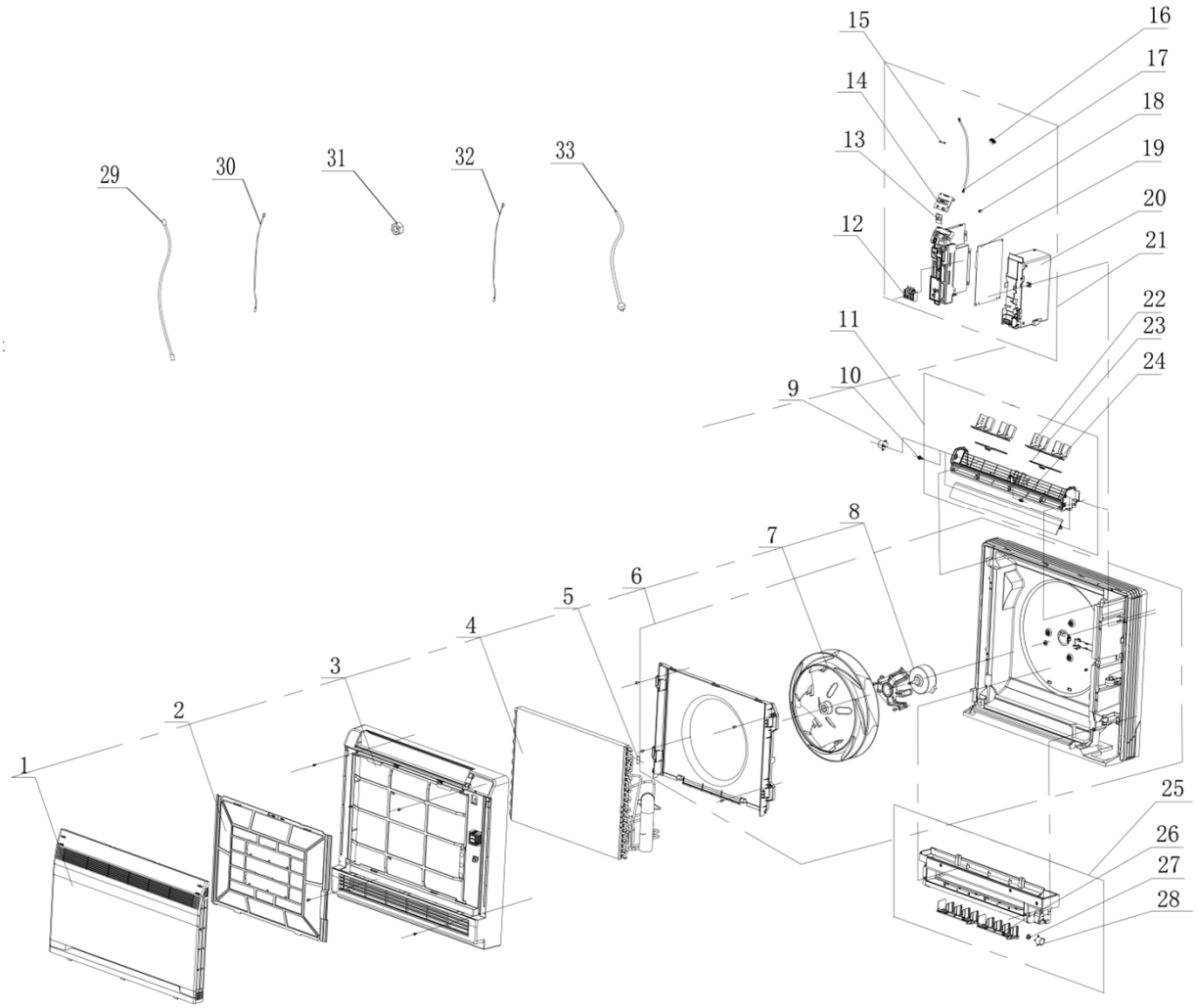

No	Description	Part Code	Note	Qty	Price Code
MODEL: ASP-09BI CONSOLE INDOOR UNIT					
1	Front Panel Assy	20012756		1	AS
2	Filter Sub-Assy	11122139		1	AK
3	Front Case Assy	20012601		1	AP
4	Evaporator Assy	01100100160		1	BF
5	Temp Sensor Sleeving	05212423		1	AB
6	Rear Case assy	000001000051		1	BK
7	Centrifugal Fan	10312005		1	AY
8	Brushless DC Motor	1570410001201		1	BA
9	Stepping Motor	1521210805		1	AG
10	Crank	73012005		1	AB
11	Swing Assy	10102042		1	AF
12	Terminal Board	422000000022		1	AF
13	Switch Board	30112007		1	AH
14	Display Board	30568131		1	AM
15	Fuse	46010055		1	AB
16	Radiator	none		0	-
17	Signal Wire	4003004202		1	AG
18	Jumper	4202300111		1	AA
19	Main Board	300002000631		1	AY
20	Electric Box	20112116		1	AG
21	Electric Box Assy	100002002848		1	BA
22	Air Louver (upper)	10512143		2	AB
23	Swing Lever	10582096		2	AB
24	Shaft of Guide Louver	10542020		2	AB
25	Water Tray Assy	20182141		1	AX
26	Air Louver (lower)	10512144		2	AE
27	Axis (lower step motor)	10542034		1	AB
28	Stepping Motor	1521210101		1	AG
29	Connecting Cable	4002052317		0	AN
30	Temperature Sensor	390000591		1	AD
31	Pipe Connection Nut accessories	none		0	-
32	Temperature Sensor	3900004508		1	AD
33	Power Cord	none		0	-

The data are subject to change without notice.

ASP-09BI OUTDOOR UNIT

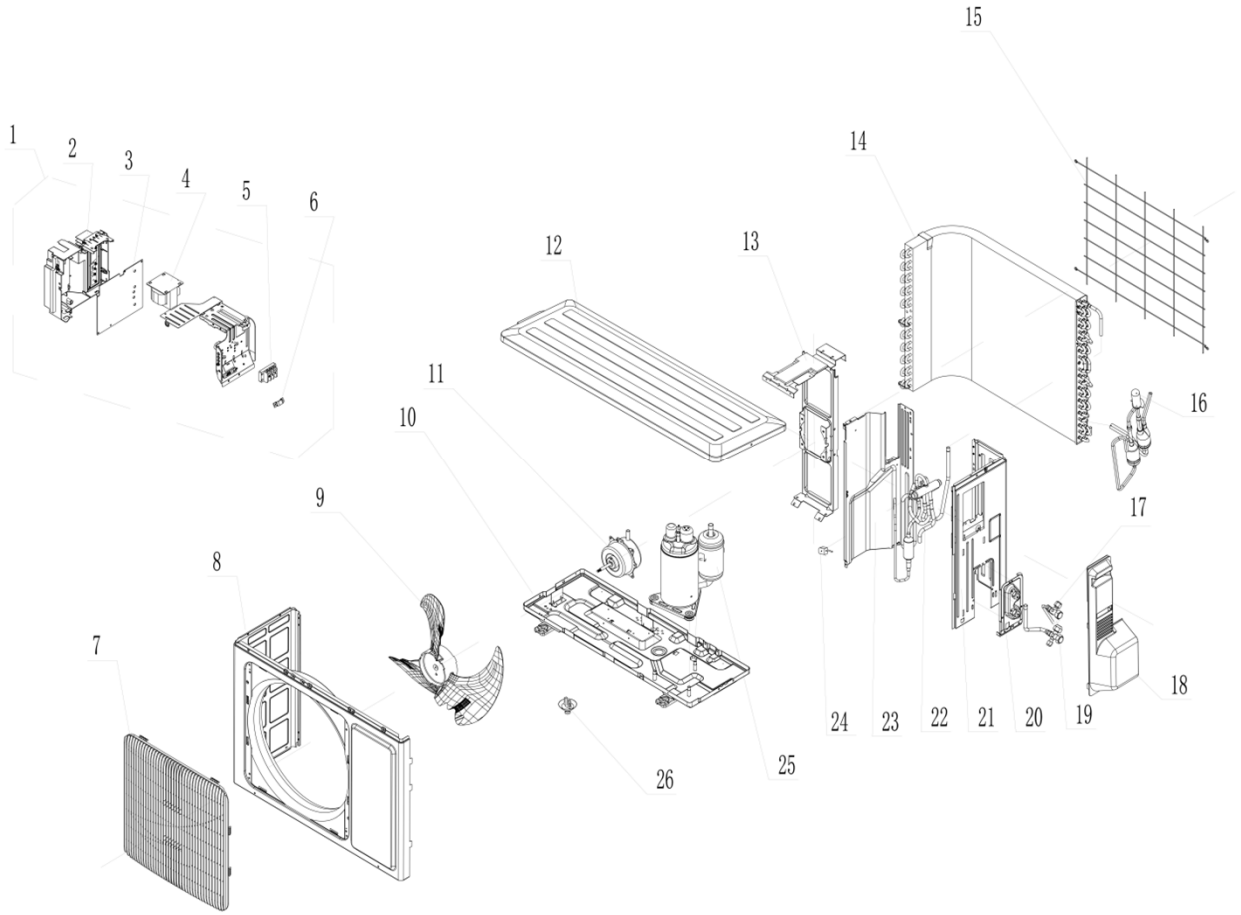

No	Description	Part Code	Note	Qty	Price Code
MODEL: ASP-09BI CONSOLE OUTDOOR UNIT					
1	Electric Box Assy	100002064342		1	-
2	Electric Box Sub-Assy	017007060831		1	-
3	Main Board	300027060561		1	-
4	Reactor	43130184		1	AS
5	Terminal Board	422000060016		1	AG
6	Wire Clamp	71010103		2	AB
7	Front Grill	22413049		1	AH
8	Front Panel Assy	0000030001511		1	AV
9	Axial Flow Fan	10333004		1	AM
10	Chassis Sub-assy	017000060298P		1	-
11	Brushless DC Motor	1501308511		1	AX
12	Top Cover Sub-Assy	000051060006		1	AM
13	Motor Support	01703104		1	AL
14	Condenser Assy	011002060497		1	-
15	Rear Grill	01473009		1	AF
16	Electronic Expansion Valve	07133821		1	AQ
17	Valve	07100003		1	AH
18	Big Handle	262334332		1	AE
19	Cut off Valve	071302391		1	AM
20	Valve Support	0171314201P		1	AE
21	Right Side Plate Assy	00013006002001		1	AK
22	4-Way Valve Assy	030152060251		1	-
23	Clapboard Sub-Assy	0123338502		1	AK
24	Magnet Coil	4300040050		1	AM
25	Compressor and Fittings	009001060050		1	BK
26	Drainage Connecter	06123401		1	AA
	Temperature Sensor Outdoor	3900030805			
	Solenoid EXV	72002000012			

The data are subject to change without notice.

ASP-12BI INDOOR UNIT

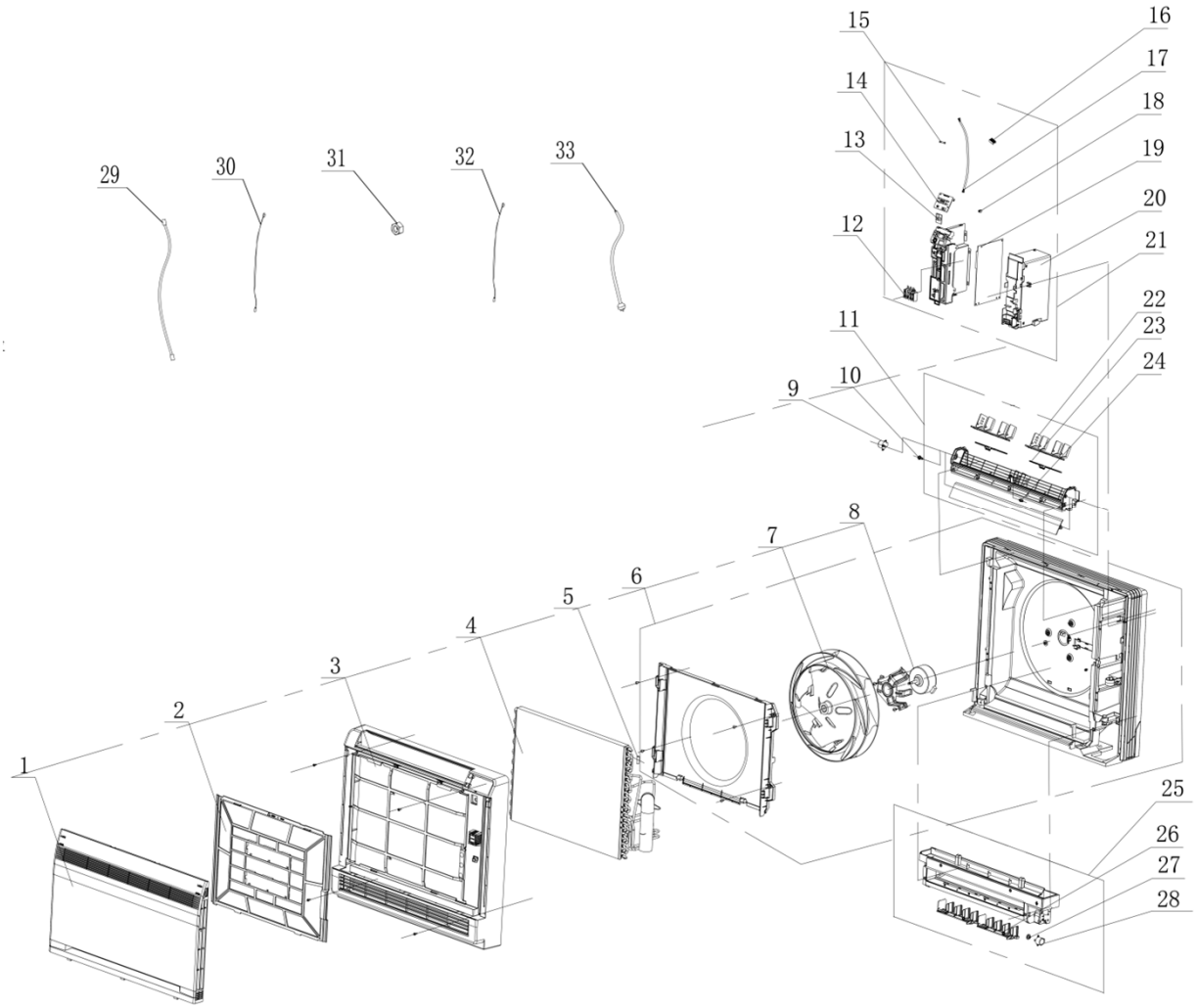

No	Description	Part Code	Note	Qty	Price Code
MODEL: ASP-12BI CONSOLE INDOOR UNIT					
1	Front Panel Assy	20012756		1	AS
2	Filter Sub-Assy	11122139		1	AK
3	Front Case Assy	20012601		1	AP
4	Evaporator Assy	01100100160		1	BF
5	Temp Sensor Sleeving	05212423		1	AB
6	Rear Case assy	000001060071		1	-
7	Centrifugal Fan	10312005		1	AY
8	Brushless DC Motor	1570410001201		1	BA
9	Stepping Motor	1521210805		1	AG
10	Crank	73012005		1	AB
11	Swing Assy	10102042		1	AF
12	Terminal Board	422000000022		1	AF
13	Switch Board	30112007		1	AH
14	Display Board	30568131		1	AH
15	Fuse	46010055		1	AB
16	Radiator	none		0	-
17	Signal Wire	4003004202		1	AG
18	Jumper	4202300112		1	AA
19	Main Board	300002000631		1	AY
20	Electric Box	20112116		1	AG
21	Electric Box Assy	100002002951		1	BA
22	Air Louver (upper)	10512143		2	AB
23	Swing Lever	10582096		2	AB
24	Shaft of Guide Louver	10542020		2	AB
25	Water Tray Assy	20182141		1	AX
26	Air Louver (lower)	10512144		2	AE
27	Axis (lower step motor)	10542034		1	AB
28	Stepping Motor	1521210101		1	AG
29	Connecting Cable	4002052317		0	AN
30	Temperature Sensor	390000591		1	AD
31	Pipe Connection Nut accessories	none		0	-
32	Temperature Sensor	3900004508		1	AD
33	Power Cord	none		0	-

ASP-12BI OUTDOOR UNIT

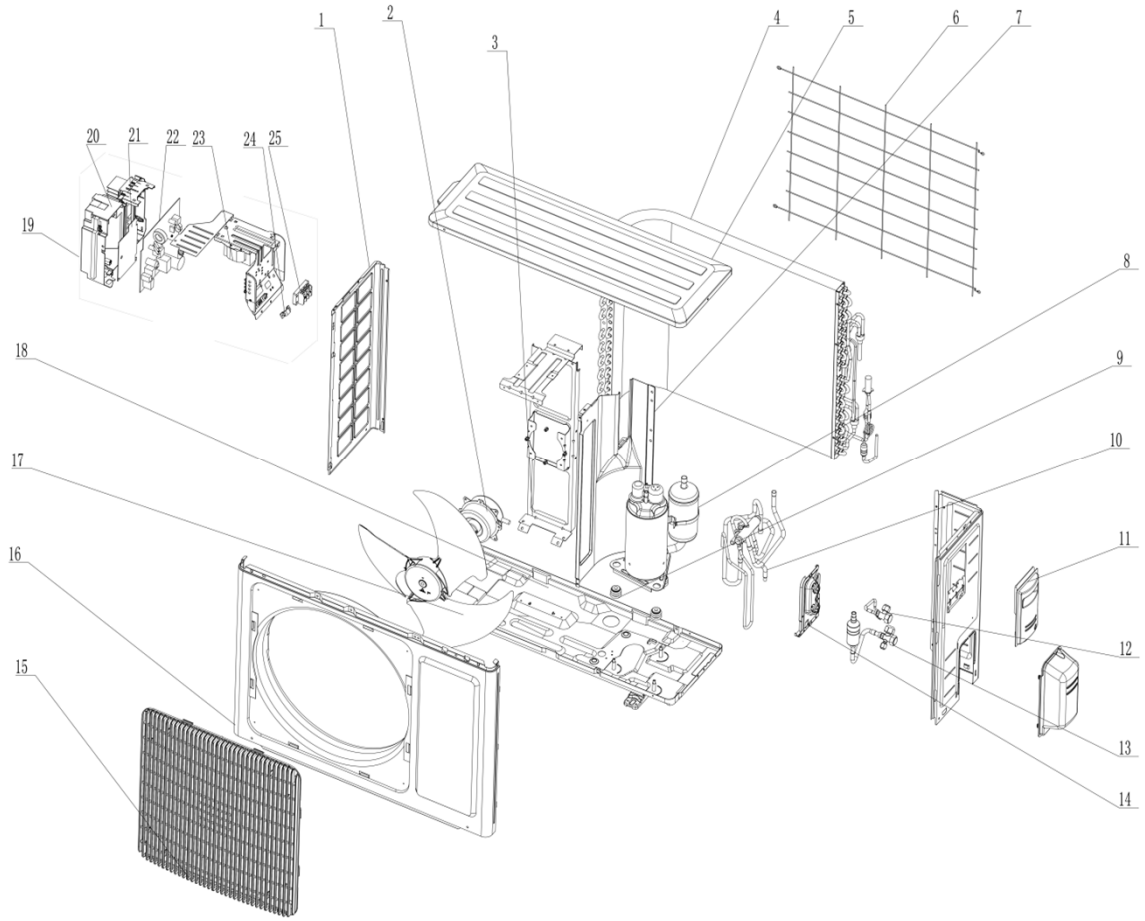

No	Description	Part Code	Note	Qty	Price Code
MODEL: ASP-12BI CONSOLE OUTDOOR UNIT					
1	Left Side Plate	01303200P		1	AK
2	Brushless DC Motor	1501308511		1	AX
3	Motor Support	01703136		1	AL
4	Condenser Assy	011002060521		1	-
5	Top Cover Sub-Assy	000051060038		1	-
6	Rear Grill	01475014		1	AG
7	Clapboard Sub-Assy	01233180		1	AL
8	Compressor and Fittings	009001060066		1	BH
9	Compressor Gasket	009012000027		3	-
10	4-Way Valve Assy	030152060255		1	-
11	Big Handle	2623343106		1	AE
12	Cut off Valve	07130239		1	AG
13	Cut off Valve	071302391		1	AM
14	Valve Support	0171314201P		1	AE
15	Front Grill	22413047		1	AH
16	Front Panel Assy	0153305204		1	AU
17	Axial Flow Fan	10333011		1	AH
18	Base Plate Sub-Assy	017000060080P		1	AR
19	Electric Box Assy	100002064438		1	-
20	Electric Box Sub-Assy	017007060849		1	-
21	Filter Board	none		0	-
22	Main Board	300027060573		1	-
23	Reactor	43130184		1	AS
24	Wire Clamp	71010103		2	AB
25	Terminal Board	422000060016		1	AG
	EXV Valve	072009000017			
	Solenoid EXV	072002000012			
	4-way Magnet Coil	4300040050			
	Temp. Sensor In	3900004508			
	Temp. Sensor Out	3900030805			

The data are subject to change without notice.

ASP-18BI INDOOR UNIT

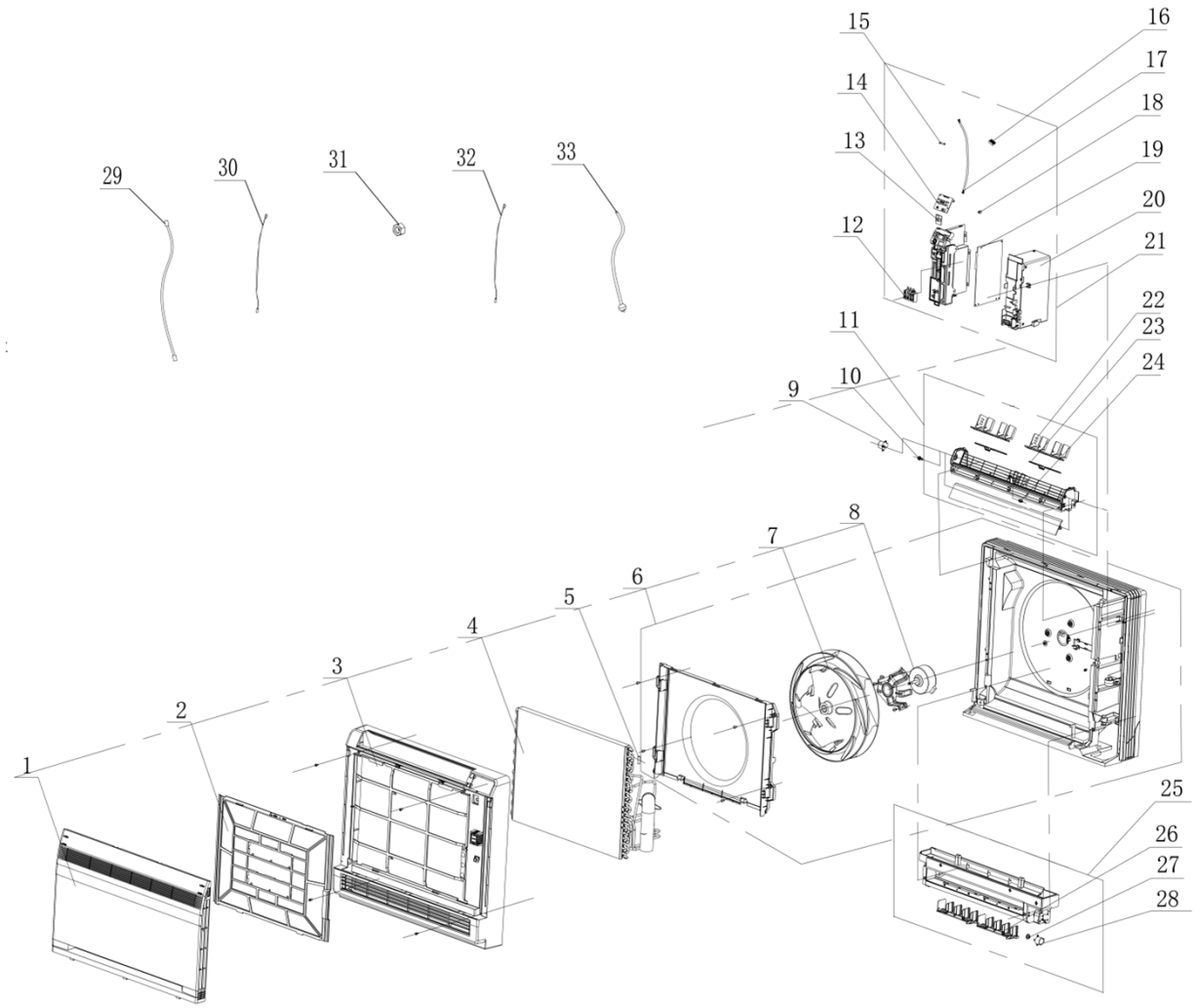

No	Description	Part Code	Note	Qty	Price Code
MODEL: ASP-18BI CONSOLE INDOOR UNIT					
1	Front Panel Assy	20012756		1	AS
2	Filter Sub-Assy	11122139		1	AK
3	Front Case Assy	20012601		1	AP
4	Evaporator Assy	01100100164		1	BF
5	Temp Sensor Sleeving	05212423		1	AB
6	Rear Case assy	000001060071		1	-
7	Centrifugal Fan	10312005		1	AY
8	Brushless DC Motor	1570410001201		1	BA
9	Stepping Motor	1521210805		1	AG
10	Crank	73012005		1	AB
11	Swing Assy	none		0	-
12	Terminal Board	422000000022		1	AF
13	Switch Board	30112007		1	AH
14	Display Board	30568131		1	AH
15	Fuse	46010055		1	AB
16	Radiator	none		0	-
17	Signal Wire	4003004202		1	AG
18	Jumper	4202300114		1	AA
19	Main Board	300002000631		1	AY
20	Electric Box	20112116		1	AG
21	Electric Box Assy	100002002386		1	BA
22	Air Louver (upper)	10512143		2	AB
23	Swing Lever	10582096		2	AB
24	Shaft of Guide Louver	10542020		2	AB
25	Water Tray Assy	20182141		1	AX
26	Air Louver (lower)	10512144		2	AE
27	Axis (lower step motor)	10542034		1	AB
28	Stepping Motor	1521210101		1	AG
29	Connecting Cable	4002052317		0	AN
30	Temperature Sensor	390000591		1	AD
31	Pipe Connection Nut accessories	none		0	-
32	Temperature Sensor	3900004508		1	AD
33	Power Cord	none		0	-

The data are subject to change without notice.

ASP-18BI OUTDOOR UNIT

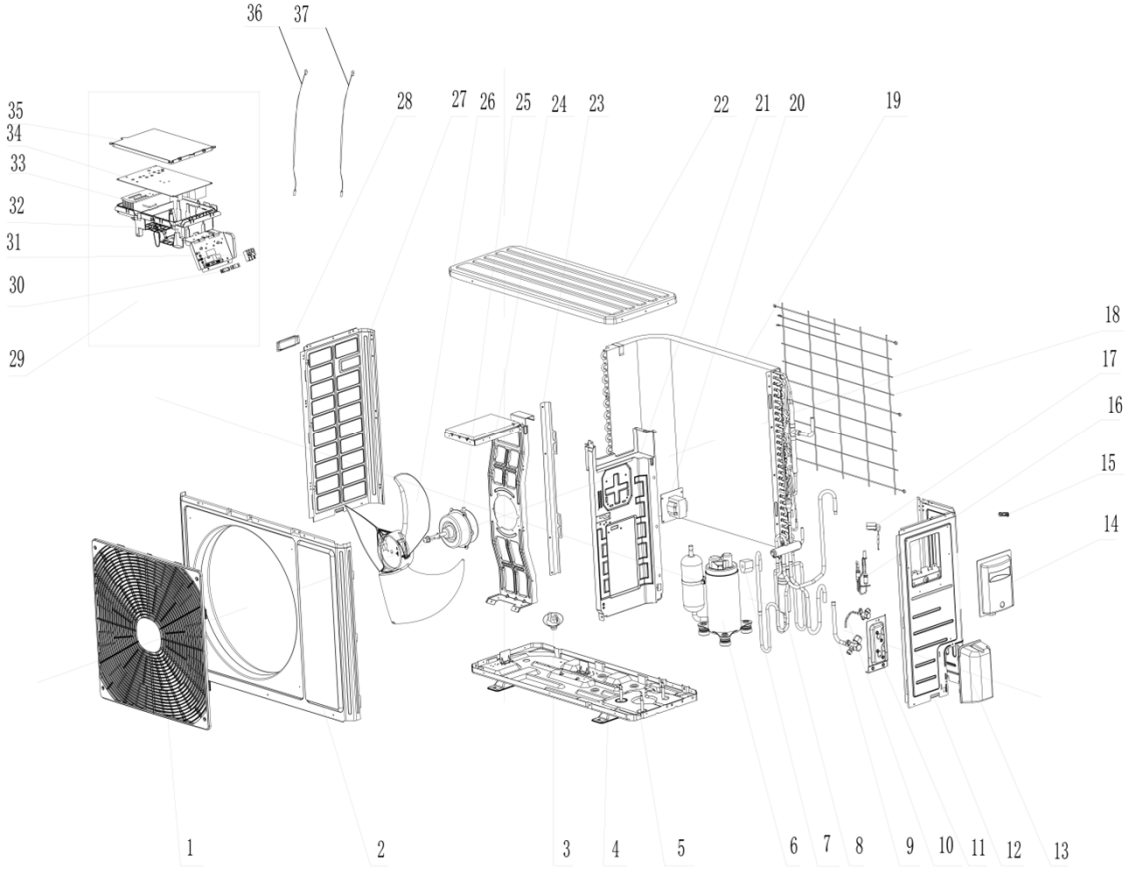

No	Description	Part Code	Note	Qty	Price Code
MODEL: ASP-18BI CONSOLE OUTDOOR UNIT					
1	Front Grill	22413045		1	AM
2	Front Panel Assy	0000030002507		1	AX
3	Drainage Connecter	06123401		1	AA
4	Chassis Sub-assy	02803270P		1	AW
5	Drainage hole Cap	06813401		1	AB
6	Compressor and Fittings	00103919G		1	BQ
7	Magnet Coil	4300040087		1	AH
8	4-Way Valve Assy	030152060322		1	-
9	Cut off Valve Assy 1/2	07133774		1	AS
10	Cut off Valve	07130239		1	AG
11	Valve Support Assy	01715010P		1	AG
12	Right Side Plate Assy	0130329201		1	AS
13	Valve Cover	22245002		1	AE
14	Handle	2623525404		1	AG
15	Wiring Clamp	26115004		1	AB
16	Electronic Expansion Valve assy	030174000058		1	AU
17	Electric Expand Valve Fitting	07200200001202		1	AN
18	Rear Grill	01473043		1	AG
19	Condenser Assy	0116348702		1	BQ
20	Reactor	none		0	-
21	Clapboard Assy	01233153		1	AN
22	Coping Sub-Assy	000051060056		1	-
23	Supporting Board(Condenser)	01795010		1	AE
24	Motor Support Sub-Assy	01705036		1	AS
25	Fan Motor	1501506402		1	BB
26	Axial Flow Fan	10335008		1	AQ
27	Left Side Plate	01305093P		1	AN
28	Handle	26233053		1	AB
29	Electric Box Assy	100002064320		1	-
30	Wire Clamp	71010003		1	AB
31	Terminal Board	422000060009		1	AG
32	Electric Box	20113027		1	AS
33	Radiator	49013060		1	AQ
34	Main Board	300027060548		1	-
35	Insulated Board (Cover of Electric Box)	20113003		1	AG
36	Temperature Sensor	3900030901		1	AH
37	Temperature Sensor	none		0	-

The data are subject to change without notice.

NOTE CONCERNING PROTECTION OF ENVIRONMENT



This product must not be disposed of via normal household waste after its service life, but must be taken to a collection station for the recycling of electrical and electronic devices. The symbol on the product, the operating instructions or the packaging indicate such disposal procedures. The materials are recyclable in accordance with their respective symbols. By means of re-use, material recycling or any other form of recycling old appliances you are making an important contribution to the protection of our environment. Please ask your local council where your nearest disposal station is located.

INFORMATION CONCERNING USED REFRIGERANT MEDIUM

This unit is containing fluorinated gases included in the Kyoto protocol. The maintenance and the liquidation must be carried out by qualified personnel.
Type of refrigerant: R32
The quantity of the refrigerant: please see the unit label.
The value GWP: 675 (1 kg R32 = 0,675 t CO_2 eq)
GWP = Global Warming Potential

 Appliance filled with flammable gas R32.

In case of quality problem or other please contact your local supplier or authorized service center.
Emergency number: 112

PRODUCER

SINCLAIR CORPORATION Ltd.
1-4 Argyll St.
London W1F 7LD
Great Britain

www.sinclair-world.com

This product was manufactured in China (Made in China).

REPRESENTATIVE

SINCLAIR Global Group s.r.o.
Purkynova 45
612 00 Brno
Czech Republic

TECHNICAL SUPPORT

SINCLAIR Global Group s.r.o.
Purkynova 45
612 00 Brno
Czech Republic

Tel.: +420 800 100 285
Fax: +420 541 590 124

www.sinclair-solutions.com
info@sinclair-solutions.com

CE