FULL DC INVERTER SYSTEMS
ENGINEERING DATA BOOK

SIDH-200-335AI

COMMERCIAL AIR CONDITIONERS SDV6

sinclair

CONTENTS

Part 1 General Information 3

Part 2 Outdoor Unit Engineering Data 7

Part 3 System Design and Installation 29

Outdoor Unit

Part 1

General Information

1 Indoor and Outdoor Unit Capacities 4

2 External Appearance 5

3 Nomenclature 6

Outdoor Unit

1 Indoor and Outdoor Unit Capacities

1.1 Indoor Units

Outdoor Unit / Indoor Unit	SODH-200AI	SODH-224AI		SODH-280AI			SODH-335AI			
Capacity Class/ kBtu/h	68	68	76	68	76	96	68	76	96	120
SIDH-200AI	1	1		1			1			
SIDH-224AI			1		1			1		
SIDH-280AI						1			1	
SIDH-335AI										1

1.2 Outdoor Units

Table 1-1.5: Outdoor unit capacity range

Model Name	Combination Type
SODH-200AI	/
SODH-224AI	/
SODH-280AI	/
SODH-335AI	/

Notes:

1. outdoor units could not be combined.

2 External Appearance

2.1 Indoor Units

SIDH-200AI SIDH-224AI SIDH-280AI SIDH-335AI
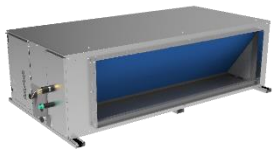

2.2 Outdoor Units

SODH-200AI SODH-224AI SODH-280AI SODH-335AI

3 Nomenclature

3.1 Outdoor Units

SODH – 200 AI

S	Sinclair
O	Outdoor unit
D	Duct
H	High static pressure
200	Cooling capacity (x100W)
A	Refrigerant (R410)
I	Individual

Part 2

Outdoor Unit Engineering Data

1 Specifications 8

2 Dimensions 10

3 Installation Space Requirements 11

4 Piping Diagrams 12

5 Wiring Diagrams 14

6 Electrical Characteristics 15

7 Functional Components and Safety Devices 16

8 Capacity Tables 17

9 Operating Limits 25

10 Sound Levels 26

11 Accessories 28

Outdoor Unit

1 Specifications

Model name			SODH-200AI	SODH-224AI
Power supply		V/Ph/Hz	380-415V, 3N~, 50Hz	
Cooling[1]	Capacity	kW	20.00	22.40
		kBtu/h	68.20	76.40
	Power input	kW	5.15	6.79
	EER		3.88	3.30
Heating[2]	Capacity	kW	20.00	22.40
		kBtu/h	68.20	76.40
	Power input	kW	4.43	5.32
	COP		4.51	4.21
SEER			7.16	6.85
ηs,c		%	283.40	271.00
SCOP			4.04	4.34
ηs,h		%	158.60	170.60
Compressor	Type		DC inverter rotary	
	Quantity		1	
	Oil type		RB75EA	
	Start-up method		Soft start	
Fan	Type		Propeller	
	Motor type		DC	
	Quantity		2	
	Motor output	kW	0.17×2	0.17×2
	Air flow rate	m^3/h	9000	9000
	Drive type		Direct	
Refrigerant	Type		R410A	
	Factory charge	kg	6.5	6.5
Pipe connections[4]	Liquid pipe	mm	Φ9.53	Φ9.53
	Gas pipe	mm	Φ19.1	Φ19.1
Sound pressure level[5]		dB(A)	58	58
Sound power level[5]		dB(A)	78	78
Net dimensions (W×H×D)		mm	1120×1558×528	
Packed dimensions (W×H×D)		mm	1270×1720×565	
Net weight		kg	143	143
Gross weight		kg	159	159
Ambient Temp. operation range	Cooling	°C	-5~48	
	Heating	°C	-20~24	

Notes:

1. Indoor temperature 27°C DB, 19°C WB; outdoor temperature 35°C DB; equivalent refrigerant piping length 7.5m with zero level difference;connect to Duct indoor unit.

2. Indoor temperature 20°C DB; outdoor temperature 7°C DB, 6°C WB; equivalent refrigerant piping length 7.5m with zero level difference;connect to Duct indoor unit.

3. Diameters given are those of the unit's stop valves.

4. Sound pressure level is measured at a position 1m in front of the unit and 1m above the floor in a semi-anechoic chamber.

Outdoor Unit

Model name			SODH-280AI	SODH-335AI
Power supply		V/Ph/Hz	380-415V, 3N~, 50Hz	
Cooling[1]	Capacity	kW	28.00	33.50
		kBtu/h	95.50	114.30
	Power input	kW	13.02	15.02
	EER		2.15	2.23
Heating[2]	Capacity	kW	28.00	33.50
		kBtu/h	95.50	114.30
	Power input	kW	7.61	9.23
	COP		3.68	3.63
SEER			5.94	6.35
ηs,c		%	234.60	251.00
SCOP			4.50	4.06
ηs,h		%	177.00	159.40
Compressor	Type		DC inverter rotary	DC inverter rotary
	Quantity		1	1
	Oil type		RB75EA	FV50S
	Start-up method		Soft start	Soft start
Fan	Type		Propeller	
	Motor type		DC	
	Quantity		2	
	Motor output	kW	0.17×2	0.17×2
	Air flow rate	m^3/h	11000	11300
	Drive type		Direct	
Refrigerant	Type		R410A	
	Factory charge	kg	6.5	8
Pipe connections[4]	Liquid pipe	mm	Φ9.53	Φ12.7
	Gas pipe	mm	Φ22.2	Φ25.4
Sound pressure level[5]		dB(A)	60	61
Sound power level[5]		dB(A)	78	81
Net dimensions (W×H×D)		mm	1120×1558×528	
Packed dimensions (W×H×D)		mm	1270×1720×565	
Net weight		kg	144	157
Gross weight		kg	160	173
Ambient Temp. operation range	Cooling	°C	-5~48	
	Heating	°C	-20~24	

Notes:

1. Indoor temperature 27°C DB, 19°C WB; outdoor temperature 35°C DB; equivalent refrigerant piping length 7.5m with zero level difference;connect to Duct indoor unit.

2. Indoor temperature 20°C DB; outdoor temperature 7°C DB, 6°C WB; equivalent refrigerant piping length 7.5m with zero level difference;connect to Duct indoor unit.

3. Diameters given are those of the unit's stop valves.

4. Sound pressure level is measured at a position 1m in front of the unit and 1m above the floor in a semi-anechoic chamber.

Outdoor Unit

2 Dimensions

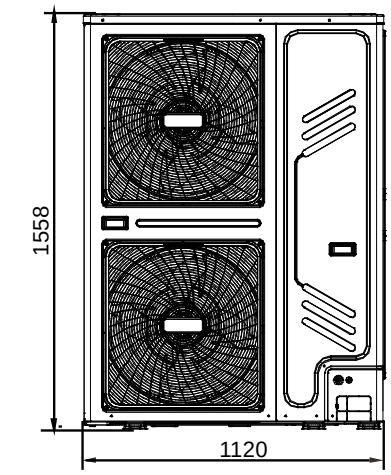

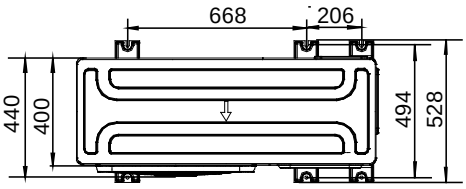

3 Installation Space Requirements

For single unit installation

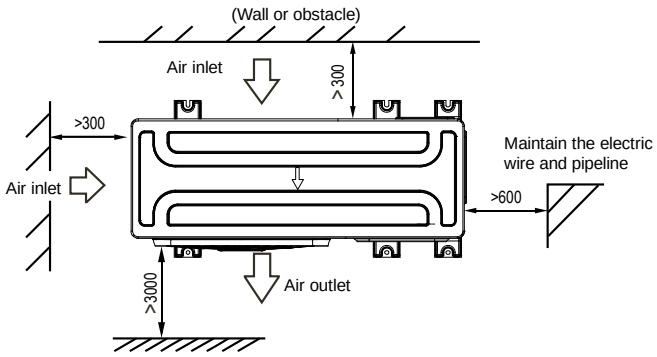

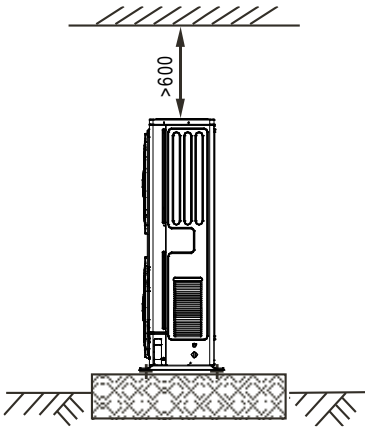

For single-row installation

Parallel connect the two units or above (unit: mm)

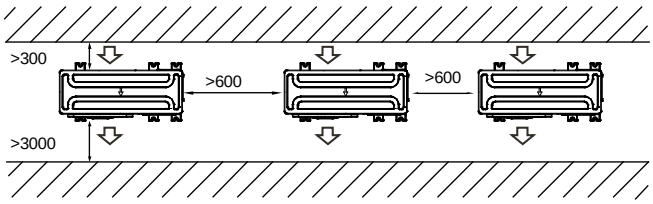

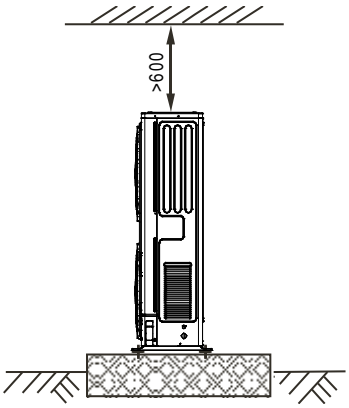

Parallel connect the front with rear sides (unit: mm)

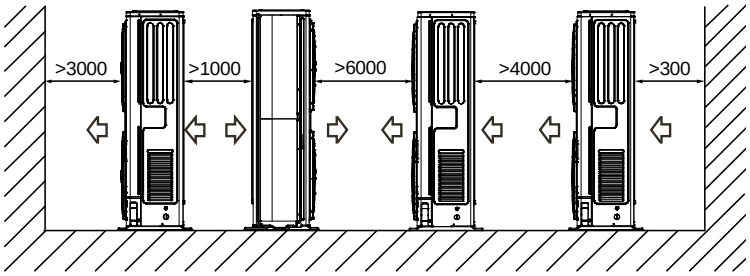

Outdoor Unit

4 Piping Diagrams

SODH-200AI; SODH-224AI; SODH-280AI piping diagram

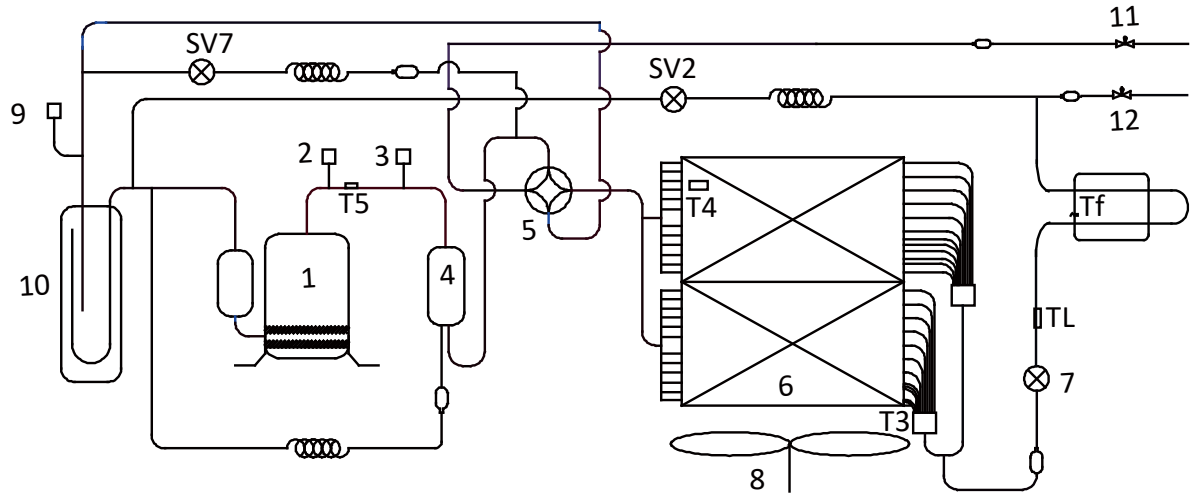

SODH-335AI piping diagram

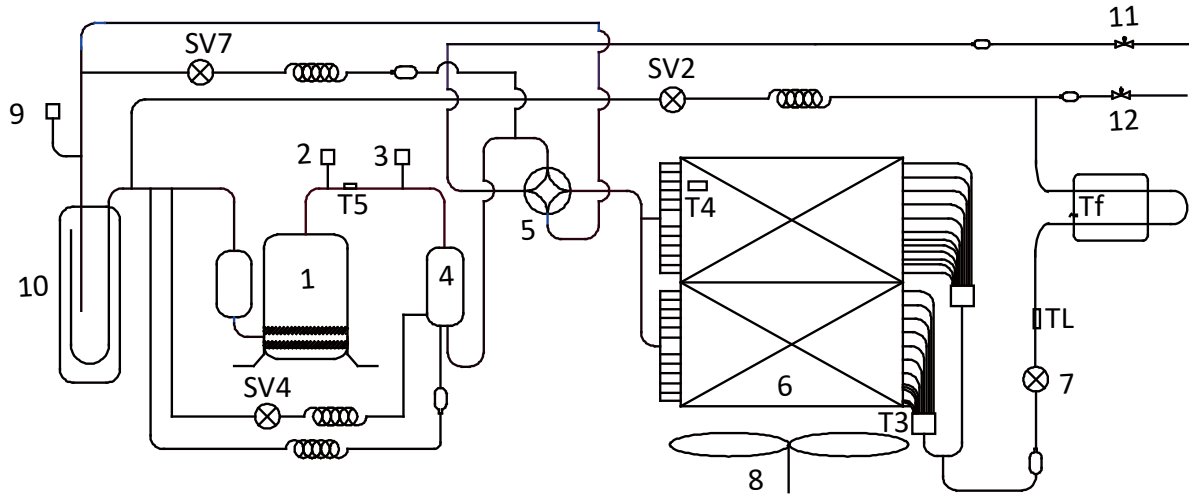

Legend				
No.	**Parts name**		**No.**	**Parts name**
1	Compressor		11	Stop valve (gas side)
2	High pressure switch		12	Stop valve (liquid side)
3	High pressure sensor		T3	Heat exchanger temperature sensor
4	Oil separator		T4	Outdoor ambient temperature sensor
5	Four-way valve		T5	Discharge temperature sensor
6	Heat exchanger		Tf	Heat sink temperature sensor
7	Electronic expansion valve (EXV)		TL	Refrigerant cooling pipe temperature sensor
8	Fan		SV2	Liquid injection valve
9	Low pressure switch		SV4	Oil return valve
10	Accumulator		SV7	Refrigerant bypass valve

Key components:

1. **Oil separator:**
   Separates oil from gas refrigerant pumped out of the compressor and quickly returns it to the compressor. Separation efficiency is up to 99%.
2. **Accumulator:**
   Stores liquid refrigerant and oil to protect compressor from liquid hammering.
3. **Electronic expansion valve (EXV):**
   Controls refrigerant flow and reduces refrigerant pressure.
4. **Four-way valve:**
   Controls refrigerant flow direction. Closed in cooling mode and open in heating mode. When closed, the heat exchanger functions as a condenser; when open, the heat exchanger functions as an evaporator.
5. **Solenoid valve SV2:**
   Protects the compressor. If compressor discharge temperature rises above 98°C, SV2 opens and sprays a small amount of liquid refrigerant to cool the compressor. SV2 closes again once the discharge temperature has fallen below 85°C.
6. **Solenoid valve SV4:**
   Returns oil to the compressor. Opens once the compressor has run for 200 seconds and closes 600 seconds later and then opens for 3 minutes every 20 minutes.
7. **Solenoid valve SV7:**
   Allows refrigerant return to the compressor directly. Opens when indoor air temperature is close to the set temperature to avoid frequent compressor on/off.
8. **High and low pressure switches:**
   Regulate system pressure. When system pressure rises above the upper limit or falls below the lower limit, the high or low pressure switches turn off, stopping the compressor. After 5 minutes, the compressor restarts.

Outdoor Unit

5 Wiring Diagrams

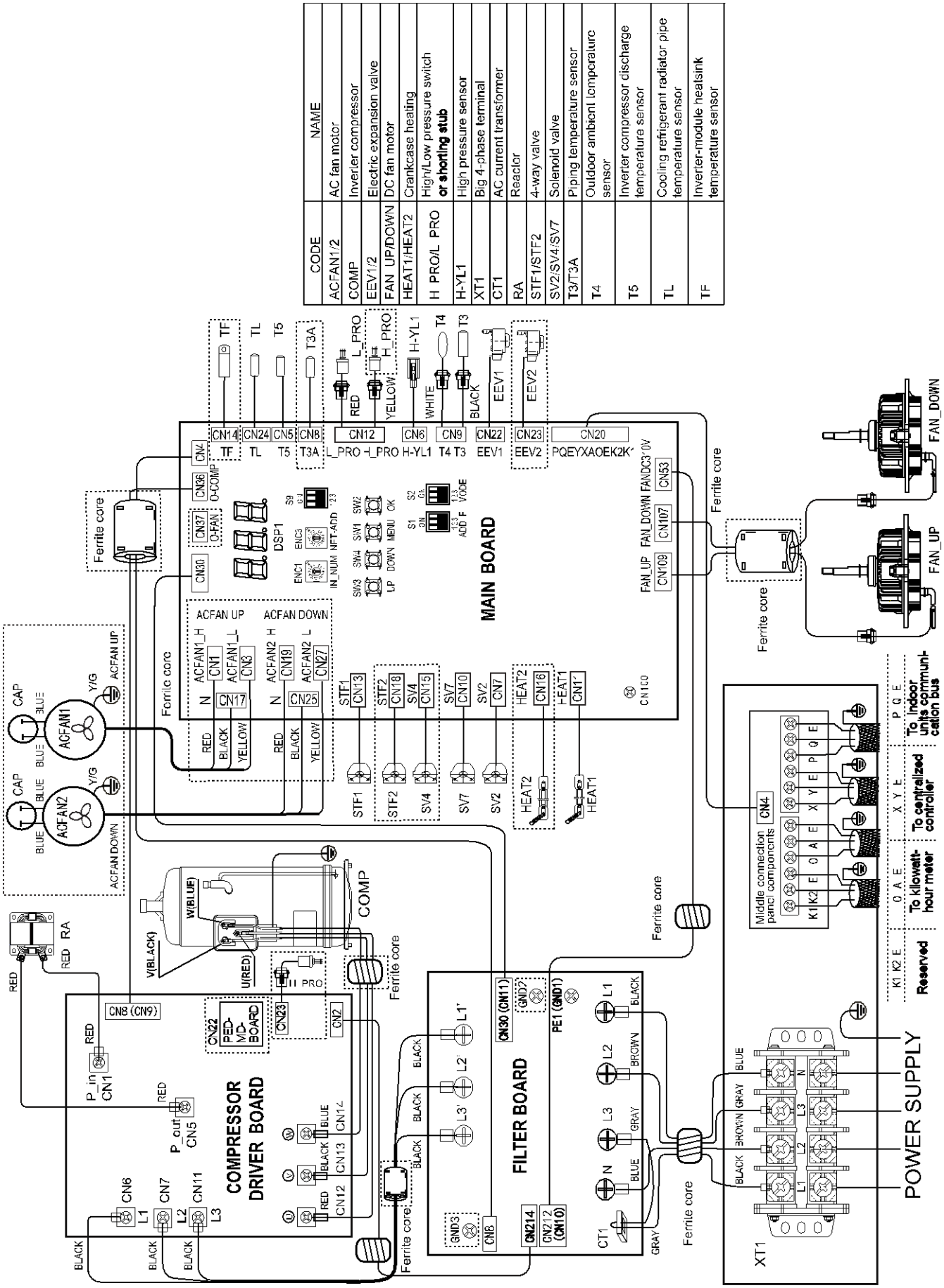

CODE	NAME
ACFAN1/2	AC fan motor
COMP	Inverter compressor
EEV1/2	Electric expansion valve
FAN UP/DOWN	DC fan motor
HEAT1/HEAT2	Crankcase heating
H PRO/L PRO	High/Low pressure switch **or shorting stub**
H-YL1	High pressure sensor
XT1	Big 4-phase terminal
CT1	AC current transformer
RA	Reactor
STF1/STF2	4-way valve
SV2/SV4/SV7	Solenoid valve
T3/T3A	Piping temperature sensor
T4	Outdoor ambient temperature sensor
T5	Inverter compressor discharge temperature sensor
TL	Cooling refrigerant radiator pipe temperature sensor
TF	Inverter-module heatsink temperature sensor

6 Electrical Characteristics

Outdoor unit electrical characteristics

Model	Power Supply[1]							Compressor		OFM	
	Hz	Volts	Min. volts	Max. volts	MCA[2]	TOCA[3]	MFA[4]	MSC[5]	RLA[6]	kW	FLA
SODH-200AI	50	380~415	342	456	19	24.3	25	/	12	2×0.17	2.1+2.1
SODH-224AI	50	380~415	342	456	19	24.3	25	/	12.4	2×0.17	2.1+2.1
SODH-280AI	50	380~415	342	456	21	24.3	25	/	18.4	2×0.17	2.1+2.1
SODH-335AI	50	380~415	342	456	26.4	33.2	32	/	19.6	2×0.17	2.1+2.1

Abbreviations:
MCA: Minimum Circuit Amps; TOCA: Total Over-current Amps; MFA: Maximum Fuse Amps; MSC: Maximum Starting Current (A); RLA: Rated Load Amps; FLA: Full Load Amps

Notes:
1. Units are suitable for use on electrical systems where voltage supplied to unit terminals is not below or above listed range limits. Maximum allowable voltage variation between phases is 2%.
2. Select wire size based on the value of MCA.
3. TOCA indicates the total overcurrent amps value of each OC set.
4. MFA is used to select overcurrent circuit breakers and residual-current circuit breakers.
5. MSC indicates the maximum current on compressor start-up in amps.
6. RLA is based on the following conditions: indoor temperature 27°C DB, 19°C WB; outdoor temperature 35°C DB.

Outdoor Unit

7 Functional Components and Safety Devices

Item			SODH-200AI SODH-224AI SODH-280AI SODH-335AI	
Compressor	Compressor discharge pipe temperature sensor		90°C = 5kΩ ± 3%	
	Crankcase heater		25W	25W × 2
Inverter module	Inverter module temperature sensor		-	90°C = 5kΩ ± 5%
Fan motor	Safety thermostat	On	115°C	
		Off	-	
System	High pressure switch		-	Off: 4.4 (±0.1) MPa / On: 3.2 (±0.1) MPa
	Low pressure switch		Off: 0.05 (±0.05) MPa / On: 0.15 (±0.05) MPa	
	High pressure sensor		Output voltage (V) = 0.8696 × P + 0.5 (where P is the discharge pressure in MPa)	
	Heat exchanger temperature sensor		25°C = 10kΩ	
	Outdoor ambient temperature sensor		25°C = 10kΩ	

8 Capacity Tables

8.1 Cooling Capacity Tables

SODH-200AI cooling capacity

Combination (%) (Capacity index)	Outdoor temperature (°C DB)	Indoor temperature(°C DB/WB)													
		DB:20.8,WB:14		DB:23.3,WB:16		DB:25.8,WB:18		DB:27,WB:19		DB:28.2,WB:20		DB:30.7,WB:22		DB:32,WB:24	
		TC	PI	TC	PI	TC	PI	TC	PI	TC	PI	TC	PI	TC	PI
		kW	kW	kW	kW	kW	kW	kW	kW	kW	kW	kW	kW	kW	kW
100%	-5	14.03	1.89	16.47	2.06	19.72	2.27	20.00	2.67	21.69	2.60	24.93	2.88	25.69	3.18
	-2	14.03	1.92	16.47	2.09	19.72	2.32	20.00	2.69	21.69	2.64	24.93	2.92	25.69	3.20
	0	14.03	1.94	16.47	2.11	19.72	2.36	20.00	2.73	21.69	2.67	24.93	2.97	25.69	3.24
	2	14.03	1.97	16.47	2.14	19.72	2.41	20.00	2.75	21.69	2.70	24.93	3.02	25.69	3.29
	4	14.03	1.99	16.47	2.18	19.72	2.44	20.00	2.79	21.69	2.74	24.93	3.05	25.69	3.33
	6	14.03	2.03	16.47	2.21	19.72	2.48	20.00	2.85	21.69	2.78	24.93	3.10	25.69	3.38
	8	14.03	2.06	16.47	2.25	19.72	2.53	20.00	2.90	21.69	2.82	24.93	3.15	25.69	3.44
	10	14.03	2.10	16.47	2.29	19.72	2.57	20.00	2.95	21.69	2.88	24.93	3.21	25.69	3.49
	12	14.03	2.14	16.47	2.34	19.72	2.67	20.00	3.01	21.69	2.94	24.93	3.27	25.33	3.52
	14	14.03	2.19	16.47	2.39	19.72	2.79	20.00	3.20	21.69	2.99	24.93	3.34	25.04	3.56
	16	14.03	2.23	16.47	2.45	19.72	2.86	20.00	3.28	21.69	3.06	24.19	3.39	24.69	3.60
	18	14.03	2.27	16.47	2.50	19.72	2.97	20.00	3.41	21.69	3.12	23.90	3.51	24.40	3.69
	20	14.03	2.32	16.47	2.59	19.72	3.21	20.00	3.64	21.69	3.36	23.54	3.69	24.04	3.88
	21	14.03	2.34	16.47	2.69	19.72	3.44	20.00	3.86	21.69	3.48	23.40	3.78	23.90	3.97
	23	14.03	2.51	16.47	2.91	19.72	3.70	20.00	4.13	21.69	3.74	23.11	3.96	23.54	4.16
	25	14.03	2.68	16.47	3.13	19.72	4.00	20.00	4.34	21.69	4.02	22.76	4.15	23.26	4.34
	27	14.03	2.87	16.47	3.37	19.72	4.23	20.00	4.60	21.69	4.31	22.40	4.33	22.90	4.53
	29	14.03	3.07	16.47	3.62	19.72	4.55	20.00	4.73	21.61	4.59	22.11	4.68	22.61	4.72
	31	14.03	3.28	16.47	3.88	19.72	4.87	20.00	4.82	21.33	4.77	21.76	4.85	22.26	4.91
	33	14.03	3.50	16.47	4.16	19.72	5.10	20.00	4.95	20.97	4.96	21.47	5.03	21.97	5.10
	35	14.03	3.73	16.47	4.46	19.72	5.20	20.00	5.28	20.61	5.29	21.11	5.34	21.61	5.39
	37	14.03	3.98	16.47	4.77	19.72	5.24	19.74	5.52	20.41	5.60	20.83	5.67	21.26	5.74
	39	14.03	4.24	16.47	5.10	19.72	5.33	19.49	5.73	20.13	5.83	20.47	5.95	20.97	6.00
	41	14.03	4.39	16.47	5.30	19.72	5.41	19.24	5.94	19.85	6.06	19.72	6.12	20.67	6.18
	43	14.03	4.55	16.47	5.40	19.72	5.59	19.17	6.22	19.57	6.32	19.84	6.43	19.91	6.48
	45	14.03	4.76	16.47	5.55	19.72	5.94	19.05	6.62	19.29	6.98	19.67	7.33	19.59	7.47
	48	14.03	5.49	16.47	5.91	19.72	6.34	18.83	7.13	19.01	7.55	19.22	7.97	19.30	8.40

Abbreviations:
CR: Combination ratio
TC: Total capacity (kW)
PI: Power input (compressor + outdoor fan motor) (kW)

Notes:

1. Shaded cells indicate rating condition.

Outdoor Unit

SODH-224AI cooling capacity

Combination (%) (Capacity index)	Outdoor temperature (°C DB)	Indoor temperature(°C DB/WB)													
		DB:20.8,WB:14		DB:23.3,WB:16		DB:25.8,WB:18		DB:27,WB:19		DB:28.2,WB:20		DB:30.7,WB:22		DB:32,WB:24	
		TC	PI	TC	PI	TC	PI	TC	PI	TC	PI	TC	PI	TC	PI
		kW	kW	kW	kW	kW	kW	kW	kW	kW	kW	kW	kW	kW	kW
100%	-5	15.72	2.42	18.45	2.64	22.09	2.91	22.40	3.42	24.29	3.34	27.92	3.70	28.77	4.08
	-2	15.72	2.46	18.45	2.67	22.09	2.97	22.40	3.44	24.29	3.39	27.92	3.74	28.77	4.10
	0	15.72	2.48	18.45	2.71	22.09	3.02	22.40	3.50	24.29	3.42	27.92	3.81	28.77	4.15
	2	15.72	2.52	18.45	2.74	22.09	3.09	22.40	3.53	24.29	3.46	27.92	3.87	28.77	4.22
	4	15.72	2.55	18.45	2.79	22.09	3.13	22.40	3.58	24.29	3.51	27.92	3.91	28.77	4.27
	6	15.72	2.60	18.45	2.83	22.09	3.18	22.40	3.66	24.29	3.56	27.92	3.97	28.77	4.33
	8	15.72	2.64	18.45	2.89	22.09	3.24	22.40	3.72	24.29	3.62	27.92	4.04	28.77	4.41
	10	15.72	2.69	18.45	2.94	22.09	3.29	22.40	3.78	24.29	3.69	27.92	4.11	28.77	4.47
	12	15.72	2.75	18.45	3.01	22.09	3.42	22.40	3.86	24.29	3.77	27.92	4.20	28.37	4.51
	14	15.72	2.80	18.45	3.07	22.09	3.58	22.40	4.10	24.29	3.84	27.92	4.29	28.05	4.56
	16	15.72	2.86	18.45	3.14	22.09	3.66	22.40	4.20	24.29	3.92	27.09	4.34	27.65	4.62
	18	15.72	2.91	18.45	3.21	22.09	3.80	22.40	4.37	24.29	4.00	26.77	4.50	27.33	4.74
	20	15.72	2.98	18.45	3.32	22.09	4.12	22.40	4.67	24.29	4.30	26.37	4.73	26.93	4.97
	21	15.72	3.00	18.45	3.45	22.09	4.41	22.40	4.95	24.29	4.46	26.21	4.84	26.77	5.09
	23	15.72	3.21	18.45	3.73	22.09	4.75	22.40	5.29	24.29	4.80	25.89	5.08	26.37	5.33
	25	15.72	3.44	18.45	4.02	22.09	5.12	22.40	5.56	24.29	5.15	25.49	5.32	26.05	5.57
	27	15.72	3.68	18.45	4.32	22.09	5.43	22.40	5.89	24.29	5.53	25.09	5.56	25.65	5.81
	29	15.72	3.93	18.45	4.64	22.09	5.83	22.40	6.07	24.21	5.88	24.77	6.00	25.33	6.05
	31	15.72	4.21	18.45	4.98	22.09	6.24	22.40	6.18	23.89	6.12	24.37	6.22	24.93	6.30
	33	15.72	4.49	18.45	5.33	22.09	6.54	22.40	6.35	23.49	6.36	24.05	6.45	24.61	6.54
	35	15.72	4.78	18.45	5.72	22.09	6.67	22.40	6.77	23.09	6.78	23.65	6.85	24.21	6.92
	37	15.72	5.10	18.45	6.12	22.09	6.72	22.11	7.08	22.86	7.18	23.33	7.27	23.81	7.37
	39	15.72	5.43	18.45	6.54	22.09	6.84	21.83	7.35	22.54	7.48	22.93	7.63	23.49	7.69
	41	15.72	5.63	18.45	6.79	22.09	6.94	21.55	7.62	22.23	7.77	22.09	7.85	23.15	7.93
	43	15.72	5.84	18.45	6.92	22.09	7.17	21.47	7.98	21.92	8.11	22.22	8.24	22.30	8.31
	45	15.72	6.11	18.45	7.12	22.09	7.62	21.33	8.48	21.61	8.95	22.03	9.40	21.95	9.58
	48	15.72	7.04	18.45	7.58	22.09	8.12	21.09	9.14	21.30	9.68	21.53	10.22	21.62	10.76

Abbreviations:
CR: Combination ratio
TC: Total capacity (kW)
PI: Power input (compressor + outdoor fan motor) (kW)

Notes:

1. Shaded cells indicate rating condition.

SODH-280AI cooling capacity

Combination (%) (Capacity index)	Outdoor temperature (°C DB)	Indoor temperature(°C DB/WB)													
		DB:20.8,WB:14		DB:23.3,WB:16		DB:25.8,WB:18		DB:27,WB:19		DB:28.2,WB:20		DB:30.7,WB:22		DB:32,WB:24	
		TC	PI	TC	PI	TC	PI	TC	PI	TC	PI	TC	PI	TC	PI
		kW	kW	kW	kW	kW	kW	kW	kW	kW	kW	kW	kW	kW	kW
100%	-5	19.64	4.30	23.06	4.69	27.61	5.17	28.00	6.07	30.36	5.93	34.90	6.56	35.96	7.24
	-2	19.64	4.36	23.06	4.75	27.61	5.27	28.00	6.12	30.36	6.01	34.90	6.65	35.96	7.28
	0	19.64	4.41	23.06	4.81	27.61	5.36	28.00	6.21	30.36	6.07	34.90	6.77	35.96	7.37
	2	19.64	4.48	23.06	4.87	27.61	5.48	28.00	6.26	30.36	6.14	34.90	6.88	35.96	7.49
	4	19.64	4.52	23.06	4.95	27.61	5.55	28.00	6.36	30.36	6.23	34.90	6.95	35.96	7.57
	6	19.64	4.62	23.06	5.02	27.61	5.65	28.00	6.49	30.36	6.32	34.90	7.06	35.96	7.69
	8	19.64	4.69	23.06	5.13	27.61	5.76	28.00	6.61	30.36	6.43	34.90	7.18	35.96	7.83
	10	19.64	4.78	23.06	5.22	27.61	5.85	28.00	6.71	30.36	6.56	34.90	7.30	35.96	7.94
	12	19.64	4.88	23.06	5.34	27.61	6.07	28.00	6.85	30.36	6.69	34.90	7.45	35.46	8.00
	14	19.64	4.98	23.06	5.45	27.61	6.35	28.00	7.28	30.36	6.82	34.90	7.61	35.06	8.10
	16	19.64	5.07	23.06	5.58	27.61	6.51	28.00	7.47	30.36	6.96	33.86	7.71	34.56	8.20
	18	19.64	5.17	23.06	5.69	27.61	6.75	28.00	7.76	30.36	7.11	33.46	7.98	34.16	8.41
	20	19.64	5.28	23.06	5.89	27.61	7.32	28.00	8.29	30.36	7.64	32.96	8.39	33.66	8.83
	21	19.64	5.33	23.06	6.13	27.61	7.84	28.00	8.79	30.36	7.92	32.76	8.60	33.46	9.04
	23	19.64	5.70	23.06	6.62	27.61	8.43	28.00	9.40	30.36	8.52	32.36	9.02	32.96	9.46
	25	19.64	6.11	23.06	7.14	27.61	9.10	28.00	9.87	30.36	9.15	31.86	9.44	32.56	9.88
	27	19.64	6.53	23.06	7.67	27.61	9.63	28.00	10.46	30.36	9.81	31.36	9.86	32.06	10.32
	29	19.64	6.98	23.06	8.24	27.61	10.36	28.00	10.77	30.26	10.44	30.96	10.66	31.66	10.74
	31	19.64	7.47	23.06	8.84	27.61	11.08	28.00	10.97	29.86	10.87	30.46	11.05	31.16	11.18
	33	19.64	7.97	23.06	9.47	27.61	11.61	28.00	11.28	29.36	11.29	30.06	11.45	30.76	11.62
	35	19.64	8.49	23.06	10.15	27.61	11.84	28.00	12.02	28.86	12.04	29.56	12.16	30.26	12.28
	37	19.64	9.06	23.06	10.86	27.61	11.93	27.64	12.57	28.57	12.75	29.16	12.91	29.76	13.08
	39	19.64	9.64	23.06	11.61	27.61	12.14	27.29	13.05	28.18	13.28	28.66	13.54	29.36	13.65
	41	19.64	10.00	23.06	12.06	27.61	12.32	26.94	13.52	27.79	13.80	27.61	13.93	28.94	14.08
	43	19.64	10.36	23.06	12.29	27.61	12.73	26.84	14.17	27.40	14.39	27.78	14.64	27.88	14.75
	45	19.64	10.84	23.06	12.64	27.61	13.53	26.67	15.06	27.01	15.90	27.54	16.70	27.43	17.02
	48	19.64	12.50	23.06	13.46	27.61	14.43	26.36	16.23	26.62	17.19	26.91	18.15	27.02	19.11

Abbreviations:
CR: Combination ratio
TC: Total capacity (kW)
PI: Power input (compressor + outdoor fan motor) (kW)

Notes:

1. Shaded cells indicate rating condition.

Outdoor Unit

SODH-335AI cooling capacity

Combination (%) (Capacity index)	Outdoor temperature (°C DB)	Indoor temperature(°C DB/WB)													
		DB:20.8,WB:14		DB:23.3,WB:16		DB:25.8,WB:18		DB:27,WB:19		DB:28.2,WB:20		DB:30.7,WB:22		DB:32,WB:24	
		TC	PI	TC	PI	TC	PI	TC	PI	TC	PI	TC	PI	TC	PI
		kW	kW	kW	kW	kW	kW	kW	kW	kW	kW	kW	kW	kW	kW
100%	-5	23.50	5.48	27.59	5.97	33.03	6.58	33.50	7.72	36.32	7.54	41.75	8.35	43.02	9.21
	-2	23.50	5.55	27.59	6.04	33.03	6.71	33.50	7.78	36.32	7.65	41.75	8.46	43.02	9.27
	0	23.50	5.62	27.59	6.12	33.03	6.83	33.50	7.90	36.32	7.73	41.75	8.61	43.02	9.38
	2	23.50	5.70	27.59	6.20	33.03	6.98	33.50	7.97	36.32	7.82	41.75	8.75	43.02	9.53
	4	23.50	5.75	27.59	6.30	33.03	7.07	33.50	8.09	36.32	7.93	41.75	8.84	43.02	9.64
	6	23.50	5.88	27.59	6.40	33.03	7.19	33.50	8.27	36.32	8.05	41.75	8.98	43.02	9.79
	8	23.50	5.97	27.59	6.53	33.03	7.33	33.50	8.41	36.32	8.19	41.75	9.13	43.02	9.96
	10	23.50	6.09	27.59	6.65	33.03	7.44	33.50	8.54	36.32	8.35	41.75	9.30	43.02	10.11
	12	23.50	6.21	27.59	6.79	33.03	7.72	33.50	8.71	36.32	8.51	41.75	9.48	42.42	10.19
	14	23.50	6.33	27.59	6.94	33.03	8.08	33.50	9.27	36.32	8.68	41.75	9.69	41.95	10.32
	16	23.50	6.46	27.59	7.10	33.03	8.28	33.50	9.50	36.32	8.86	40.51	9.81	41.35	10.44
	18	23.50	6.58	27.59	7.25	33.03	8.60	33.50	9.88	36.32	9.05	40.03	10.16	40.87	10.71
	20	23.50	6.73	27.59	7.50	33.03	9.31	33.50	10.55	36.32	9.73	39.43	10.68	40.27	11.24
	21	23.50	6.79	27.59	7.80	33.03	9.98	33.50	11.19	36.32	10.08	39.20	10.95	40.03	11.51
	23	23.50	7.26	27.59	8.42	33.03	10.73	33.50	11.96	36.32	10.84	38.72	11.48	39.43	12.05
	25	23.50	7.78	27.59	9.08	33.03	11.58	33.50	12.56	36.32	11.64	38.12	12.02	38.95	12.58
	27	23.50	8.31	27.59	9.76	33.03	12.26	33.50	13.32	36.32	12.49	37.52	12.56	38.36	13.14
	29	23.50	8.89	27.59	10.49	33.03	13.19	33.50	13.71	36.20	13.29	37.04	13.57	37.88	13.67
	31	23.50	9.51	27.59	11.25	33.03	14.10	33.50	13.96	35.72	13.83	36.44	14.06	37.28	14.23
	33	23.50	10.15	27.59	12.05	33.03	14.77	33.50	14.36	35.13	14.37	35.97	14.58	36.80	14.79
	35	23.50	10.81	27.59	12.92	33.03	15.07	33.50	15.30	34.53	15.32	35.37	15.48	36.20	15.63
	37	23.50	11.53	27.59	13.83	33.03	15.18	33.07	16.00	34.18	16.22	34.89	16.43	35.61	16.65
	39	23.50	12.27	27.59	14.77	33.03	15.45	32.65	16.62	33.72	16.90	34.29	17.24	35.13	17.38
	41	23.50	12.73	27.59	15.35	33.03	15.68	32.23	17.21	33.25	17.57	33.04	17.73	34.63	17.92
	43	23.50	13.19	27.59	15.65	33.03	16.21	32.12	18.03	32.78	18.32	33.23	18.63	33.36	18.77
	45	23.50	13.80	27.59	16.08	33.03	17.22	31.91	19.18	32.32	20.24	32.95	21.25	32.82	21.66
	48	23.50	15.91	27.59	17.14	33.03	18.36	31.54	20.66	31.85	21.88	32.20	23.10	32.33	24.33

Abbreviations:
CR: Combination ratio
TC: Total capacity (kW)
PI: Power input (compressor + outdoor fan motor) (kW)

Notes:

1. Shaded cells indicate rating condition.

8.2 Heating Capacity Tables

SODH-200AI heating capacity

CR	Outdoor air temp.		Indoor air temp. °C DB											
			16		18		20		21		22		24	
			TC	PI	TC	PI	TC	PI	TC	PI	TC	PI	TC	PI
	°C DB	°C WB	kW	kW	kW	kW	kW	kW	kW	kW	kW	kW	kW	kW
100%	-19.8	-20	18.43	7.07	18.36	7.15	18.29	7.23	18.29	7.27	18.29	7.31	18.21	7.40
	-18.8	-19	18.71	7.09	18.64	7.17	18.57	7.24	18.57	7.28	18.57	7.32	18.50	7.41
	-16.7	-17	19.00	7.10	18.93	7.17	18.93	7.25	18.86	7.30	18.86	7.34	18.79	7.25
	-13.7	-15	19.29	7.11	19.21	7.18	19.21	7.27	19.14	7.30	19.14	7.35	19.07	7.11
	-11.8	-13	19.57	7.12	19.50	7.20	19.50	7.28	19.43	7.32	19.43	7.36	19.07	6.97
	-9.8	-11	19.71	7.13	19.71	7.21	19.64	7.29	19.64	7.32	19.57	7.36	19.07	6.90
	-9.5	-10	19.86	7.14	19.79	7.21	19.79	7.29	19.71	7.33	19.71	7.37	19.07	6.84
	-8.5	-9.1	20.07	7.15	20.07	7.22	20.00	7.30	19.93	7.34	19.93	7.38	19.07	6.74
	-7	-7.6	21.64	7.16	21.57	7.22	21.57	7.30	21.50	7.61	20.79	7.23	19.07	6.53
	-5	-5.6	21.93	7.17	21.86	7.22	21.86	7.30	21.64	7.86	20.79	7.48	19.07	6.75
	-3	-3.7	22.36	7.17	22.29	7.23	22.29	7.06	21.64	7.40	20.79	7.86	19.07	7.10
	0	-0.7	22.93	7.18	24.21	7.23	22.50	6.87	21.64	7.78	20.79	7.42	19.07	6.67
	3	2.2	24.43	7.63	24.21	7.05	22.50	6.67	21.64	7.16	20.79	6.83	19.07	6.17
	5	4.1	25.93	7.24	24.21	6.71	22.50	6.35	21.64	6.54	20.79	6.24	19.07	5.68
	7	6	25.93	6.84	24.21	6.36	22.50	5.95	21.64	5.72	20.79	5.48	19.07	5.02
	9	7.9	25.93	6.45	24.21	6.03	22.50	5.61	21.64	5.40	20.79	5.19	19.07	4.79
	11	9.8	25.93	6.04	24.21	5.66	22.50	5.29	21.64	5.11	20.79	4.93	19.07	4.58
	13	11.8	25.93	5.66	24.21	5.34	22.50	5.02	21.64	4.86	20.79	4.71	19.07	4.40
	15	13.7	25.93	5.38	24.21	5.10	22.50	4.82	47.36	4.68	20.79	4.54	19.07	4.27

Abbreviations:
CR: Combination ratio
TC: Total capacity (kW)
PI: Power input (compressor + outdoor fan motor) (kW)

Notes:

1. Shaded cells indicate rating condition.

SODH-224AI heating capacity

CR	Outdoor air temp.		Indoor air temp. °C DB											
			16		18		20		21		22		24	
			TC	PI	TC	PI	TC	PI	TC	PI	TC	PI	TC	PI
	°C DB	°C WB	kW	kW	kW	kW	kW	kW	kW	kW	kW	kW	kW	kW
100%	-19.8	-20	20.48	7.93	20.40	8.01	20.32	8.10	20.32	8.15	20.32	8.20	20.24	8.29
	-18.8	-19	20.79	7.95	20.71	8.03	20.63	8.12	20.63	8.16	20.63	8.21	20.56	8.30
	-16.7	-17	21.11	7.96	21.03	8.04	21.03	8.13	20.95	8.18	20.95	8.23	20.87	8.13
	-13.7	-15	21.43	7.98	21.35	8.05	21.35	8.15	21.27	8.19	21.27	8.24	21.19	7.97
	-11.8	-13	21.75	7.98	21.67	8.07	21.67	8.16	21.59	8.21	21.59	8.25	21.19	7.81
	-9.8	-11	21.90	7.99	21.90	8.08	21.83	8.17	21.83	8.21	21.75	8.26	21.19	7.73
	-9.5	-10	22.06	8.00	21.98	8.08	21.98	8.17	21.90	8.22	21.90	8.27	21.19	7.67
	-8.5	-9.1	22.30	8.01	22.30	8.09	22.22	8.18	22.14	8.23	22.14	8.27	21.19	7.56
	-7	-7.6	24.05	8.02	23.97	8.09	23.97	8.18	23.89	8.53	23.10	8.11	21.19	7.32
	-5	-5.6	24.37	8.03	24.29	8.10	24.29	8.19	24.05	8.82	23.10	8.39	21.19	7.57
	-3	-3.7	24.84	8.04	24.76	8.10	24.76	7.92	24.05	8.29	23.10	8.82	21.19	7.96
	0	-0.7	25.48	8.05	26.90	8.11	25.00	7.70	24.05	8.72	23.10	8.31	21.19	7.47
	3	2.2	27.14	8.56	26.90	7.91	25.00	7.48	24.05	8.02	23.10	7.66	21.19	6.92
	5	4.1	28.81	8.11	26.90	7.52	25.00	7.12	24.05	7.33	23.10	7.00	21.19	6.37
	7	6	28.81	7.67	26.90	7.13	25.00	6.67	24.05	6.41	23.10	6.14	21.19	5.63
	9	7.9	28.81	7.23	26.90	6.76	25.00	6.28	24.05	6.05	23.10	5.82	21.19	5.37
	11	9.8	28.81	6.77	26.90	6.34	25.00	5.94	24.05	5.73	23.10	5.53	21.19	5.13
	13	11.8	28.81	6.34	26.90	5.98	25.00	5.63	24.05	5.45	23.10	5.28	21.19	4.93
	15	13.7	28.81	6.03	26.90	5.72	25.00	5.40	52.62	5.25	23.10	5.09	21.19	4.79

Abbreviations:
CR: Combination ratio
TC: Total capacity (kW)
PI: Power input (compressor + outdoor fan motor) (kW)

Notes:

1. Shaded cells indicate rating condition.

Outdoor Unit

SODH-280AI heating capacity

CR	Outdoor air temp.		Indoor air temp. °C DB											
			16		18		20		21		22		24	
			TC	PI	TC	PI	TC	PI	TC	PI	TC	PI	TC	PI
	°C DB	°C WB	kW	kW	kW	kW	kW	kW	kW	kW	kW	kW	kW	kW
100%	-19.8	-20	25.80	10.37	25.70	10.49	25.60	10.60	25.60	10.67	25.60	10.73	25.50	10.86
	-18.8	-19	26.20	10.40	26.10	10.51	26.00	10.63	26.00	10.68	26.00	10.74	25.90	10.87
	-16.7	-17	26.60	10.41	26.50	10.53	26.50	10.64	26.40	10.70	26.40	10.77	26.30	10.64
	-13.7	-15	27.00	10.44	26.90	10.54	26.90	10.67	26.80	10.72	26.80	10.78	26.70	10.43
	-11.8	-13	27.40	10.45	27.30	10.56	27.30	10.68	27.20	10.74	27.20	10.79	26.70	10.22
	-9.8	-11	27.60	10.46	27.60	10.58	27.50	10.69	27.50	10.74	27.40	10.80	26.70	10.12
	-9.5	-10	27.80	10.48	27.70	10.58	27.70	10.69	27.60	10.75	27.60	10.82	26.70	10.03
	-8.5	-9.1	28.10	10.49	28.10	10.59	28.00	10.70	27.90	10.77	27.90	10.83	26.70	9.89
	-7	-7.6	30.30	10.50	30.20	10.59	30.20	10.71	30.10	11.16	29.10	10.62	26.70	9.58
	-5	-5.6	30.70	10.51	30.60	10.60	30.60	10.71	30.30	11.54	29.10	10.98	26.70	9.91
	-3	-3.7	31.30	10.53	31.20	10.61	31.20	10.36	30.30	10.86	29.10	11.54	26.70	10.41
	0	-0.7	32.10	10.54	33.90	10.61	31.50	10.07	30.30	11.41	29.10	10.88	26.70	9.78
	3	2.2	34.20	11.20	33.90	10.35	31.50	9.79	30.30	10.50	29.10	10.02	26.70	9.06
	5	4.1	36.30	10.62	33.90	9.84	31.50	9.32	30.30	9.59	29.10	9.16	26.70	8.34
	7	6	36.30	10.04	33.90	9.34	31.50	8.73	30.30	8.39	29.10	8.03	26.70	7.36
	9	7.9	36.30	9.46	33.90	8.84	31.50	8.22	30.30	7.92	29.10	7.62	26.70	7.02
	11	9.8	36.30	8.86	33.90	8.30	31.50	7.77	30.30	7.50	29.10	7.24	26.70	6.72
	13	11.8	36.30	8.30	33.90	7.83	31.50	7.36	30.30	7.14	29.10	6.91	26.70	6.45
	15	13.7	36.30	7.89	33.90	7.49	31.50	7.07	66.30	6.87	29.10	6.67	26.70	6.26

Abbreviations:
CR: Combination ratio
TC: Total capacity (kW)
PI: Power input (compressor + outdoor fan motor) (kW)

Notes:

1. Shaded cells indicate rating condition.

SODH-335AI heating capacity

CR	Outdoor air temp.		Indoor air temp. °C DB											
			16		18		20		21		22		24	
			TC	PI	TC	PI	TC	PI	TC	PI	TC	PI	TC	PI
	°C DB	°C WB	kW	kW	kW	kW	kW	kW	kW	kW	kW	kW	kW	kW
100%	-19.8	-20	30.71	13.93	30.60	14.08	30.48	14.23	30.48	14.32	30.48	14.40	30.36	14.57
	-18.8	-19	31.19	13.96	31.07	14.11	30.95	14.27	30.95	14.34	30.95	14.42	30.83	14.59
	-16.7	-17	31.67	13.98	31.55	14.13	31.55	14.28	31.43	14.37	31.43	14.45	31.31	14.28
	-13.7	-15	32.14	14.01	32.02	14.15	32.02	14.32	31.90	14.39	31.90	14.47	31.79	14.00
	-11.8	-13	32.62	14.03	32.50	14.18	32.50	14.34	32.38	14.42	32.38	14.49	31.79	13.72
	-9.8	-11	32.86	14.05	32.86	14.20	32.74	14.35	32.74	14.42	32.62	14.51	31.79	13.59
	-9.5	-10	33.10	14.06	32.98	14.20	32.98	14.35	32.86	14.44	32.86	14.52	31.79	13.47
	-8.5	-9.1	33.45	14.08	33.45	14.22	33.33	14.37	33.21	14.45	33.21	14.54	31.79	13.28
	-7	-7.6	36.07	14.10	35.95	14.22	35.95	14.38	35.83	14.98	34.64	14.25	31.79	12.86
	-5	-5.6	36.55	14.11	36.43	14.23	36.43	14.38	36.07	15.49	34.64	14.74	31.79	13.30
	-3	-3.7	37.26	14.13	37.14	14.24	37.14	13.91	36.07	14.57	34.64	15.49	31.79	13.98
	0	-0.7	38.21	14.15	40.36	14.25	37.50	13.52	36.07	15.32	34.64	14.61	31.79	13.13
	3	2.2	40.71	15.04	40.36	13.89	37.50	13.14	36.07	14.10	34.64	13.45	31.79	12.16
	5	4.1	43.21	14.26	40.36	13.21	37.50	12.51	36.07	12.88	34.64	12.30	31.79	11.19
	7	6	43.21	13.48	40.36	12.54	37.50	11.72	36.07	11.26	34.64	10.79	31.79	9.89
	9	7.9	43.21	12.71	40.36	11.87	37.50	11.04	36.07	10.63	34.64	10.23	31.79	9.43
	11	9.8	43.21	11.89	40.36	11.14	37.50	10.43	36.07	10.07	34.64	9.72	31.79	9.02
	13	11.8	43.21	11.14	40.36	10.51	37.50	9.89	36.07	9.58	34.64	9.27	31.79	8.66
	15	13.7	43.21	10.60	40.36	10.06	37.50	9.49	78.93	9.22	34.64	8.95	31.79	8.41

Abbreviations:
CR: Combination ratio
TC: Total capacity (kW)
PI: Power input (compressor + outdoor fan motor) (kW)

Notes:

1. Shaded cells indicate rating condition.

8.3 Capacity Correction Factors for Piping Length and Level Difference

Rate of change in cooling capacity

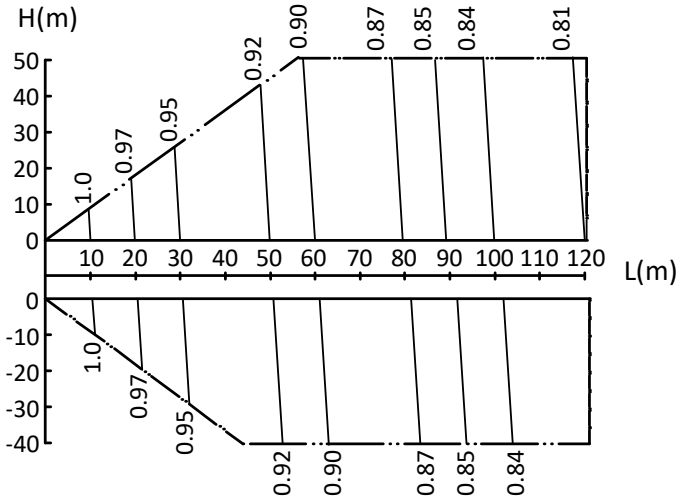

Rate of change in heating capacity

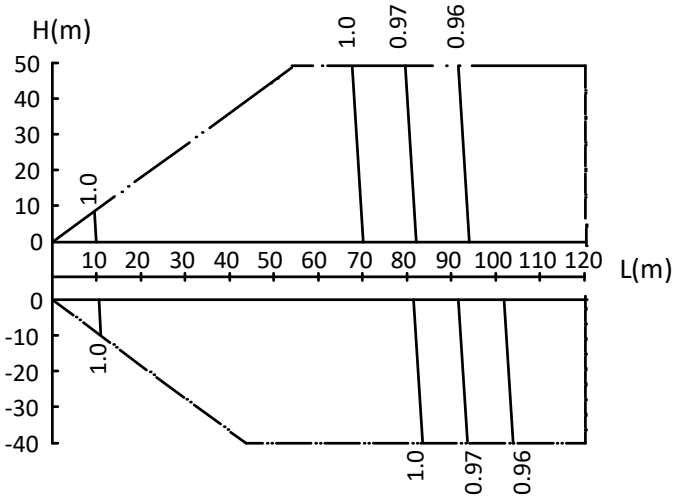

Notes:

1. The horizontal axis shows equivalent length of piping between farthest indoor unit and outdoor unit; the vertical axis shows the largest level difference between indoor unit and outdoor unit. For level differences, positive values indicate that the outdoor unit is above the indoor unit, negative values indicate that the outdoor unit is below the indoor unit.
2. These figures illustrate the rate of change in capacity of a system with only standard indoor units at maximum load (with the thermostat set to maximum) under standard conditions. Under partial load conditions there is only a minor deviation from the rate of change in capacity shown in these figures.
3. The capacity of the system is either the total capacity of the indoor units obtained from indoor unit capacity tables or the corrected capacity of the outdoor units as per the calculations below, whichever is smaller.

Corrected capacity of outdoor units	=	Capacity of outdoor units obtained from outdoor unit capacity tables at the combination ratio	x	Capacity correction factor

8.4 Capacity Correction Factors for Frost Accumulation

The heating capacity tables do not take account of the reduction in capacity when frost has accumulated or while the defrosting operation is in progress. If snow has accumulated against the outside surface of the outdoor unit heat exchanger heating capacity is reduced. The reduction in heating capacity is dependent on a number of factors including the outdoor temperature, the relative humidity and the amount of frosting which has occurred.

Corrected heating capacity values, which take these factors into account, can be calculated as follows, using the correction factors for frost accumulation given

Corrected heating capacity = Value given in outdoor heating capacity table × Correction factor for frost accumulation

TCorrection factor for frost accumulation

Heat exchanger inlet port temperature (°C / RH 85%)	-7	-5	-2	0	2	5	7
Correction factor for frost accumulation	0.94	0.93	0.89	0.84	0.83	0.91	1.00

Corrected heating capacities express the heating capacity over the heating/defrosting cycle shown below.

Defrosting cycle

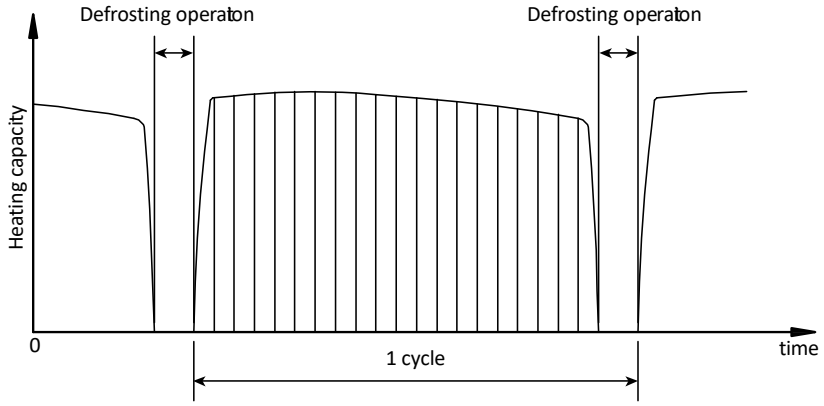

9 Operating Limits

Cooling operating limits

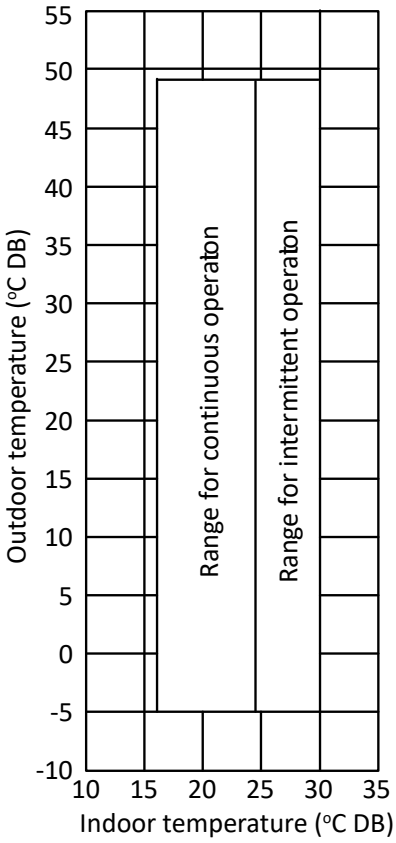

Heating operating limits

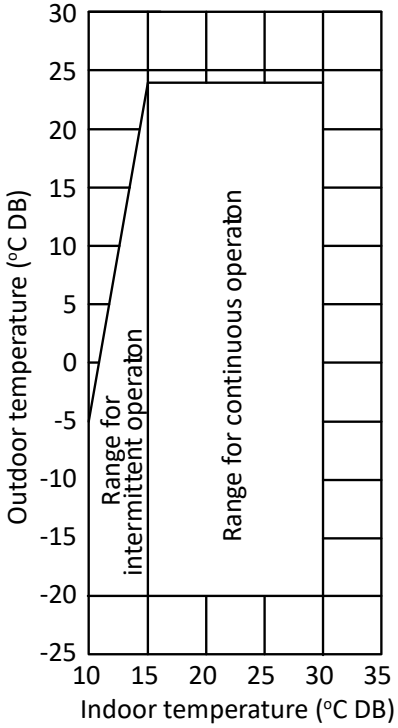

Notes:

1. These figures assume the following operating conditions:
   - Equivalent piping length: 7.5m
   - Level difference: 0

Outdoor Unit

10 Sound Levels

10.1 Overall

Sound pressure level

Model	dB(A)
SODH-200AI	58
SODH-224AI	58
SODH-280AI	60
SODH-335AI	61

Notes:

1. Sound pressure level is measured at a position 1000mm in front of the unit and (H+1000)/2mm above the floor in a semi-anechoic chamber. During in-situ operation, sound pressure levels may be higher as a result of ambient noise.

Sound pressure level measurement (unit: mm)

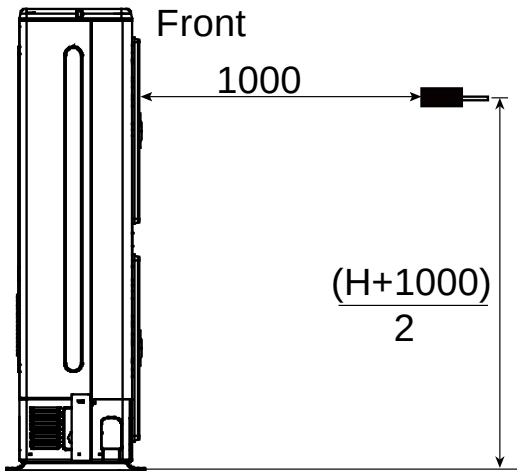

10.2 Octave Band Levels

SODH-200AI / SODH-224AI octave band level

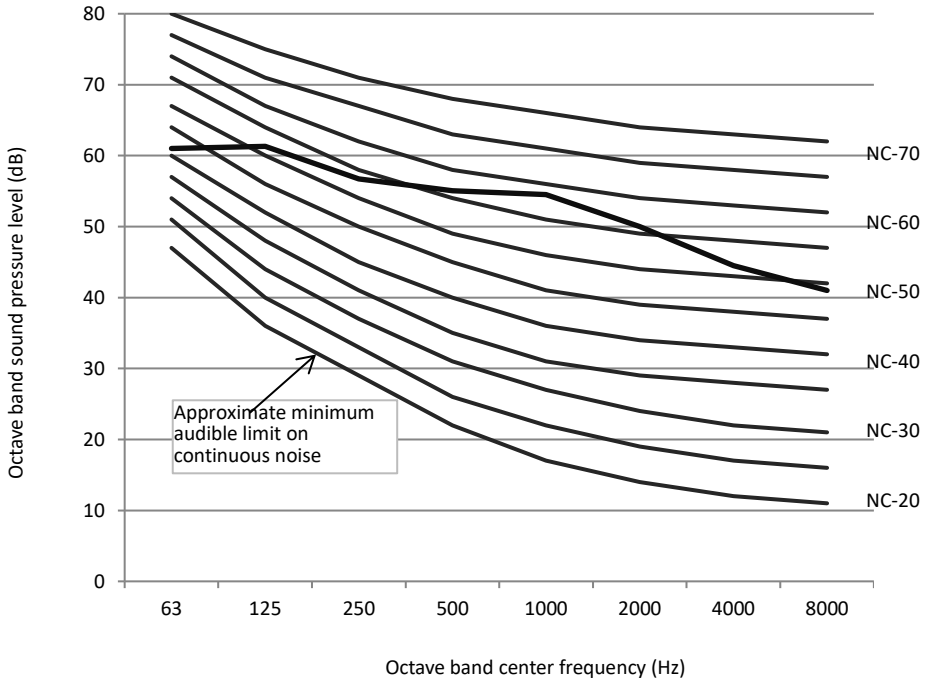

SODH-280AI octave band level

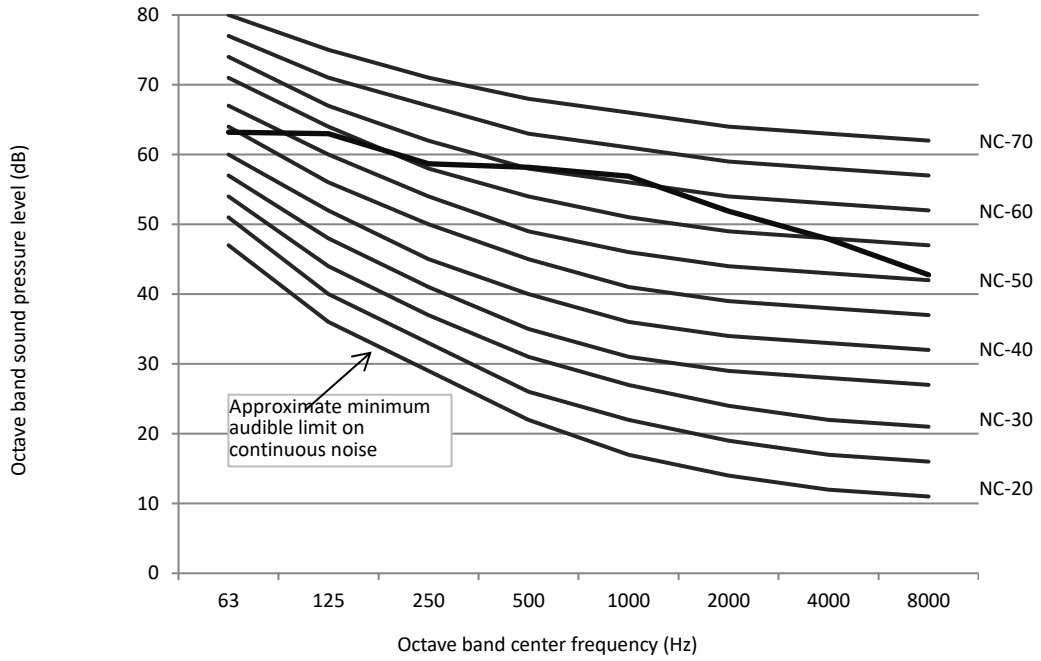

SODH-335AI octave band level

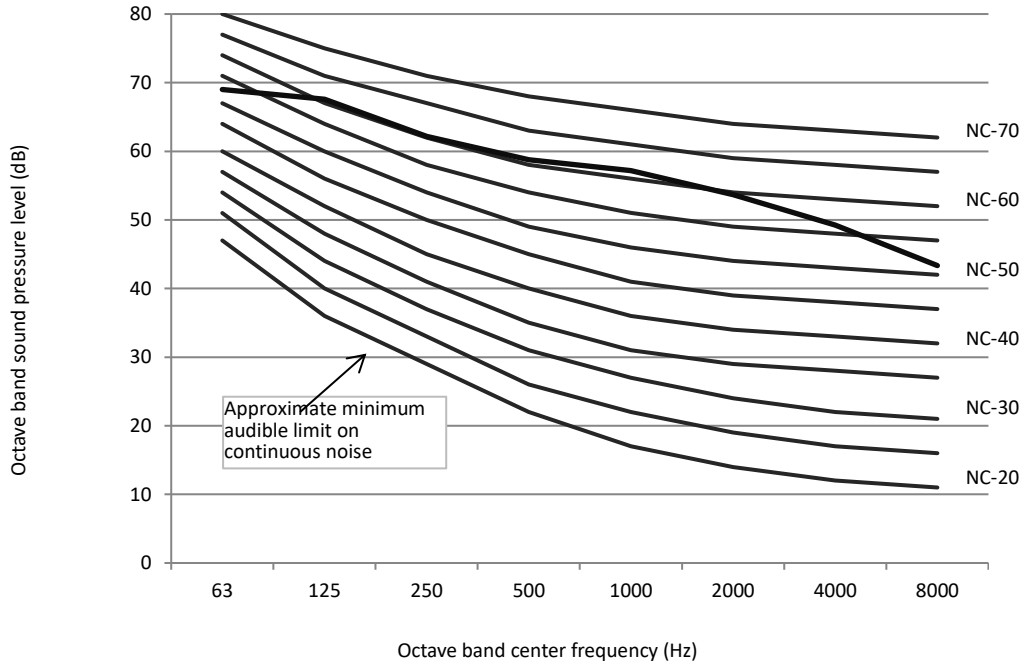

Outdoor Unit

11 Accessories

11.1 Standard Accessories

Name	Shape	Quantity	Function
Outdoor unit installation manual		1	
Outdoor unit owner's manual		1	
Installation inststructions: Indoor unit manifold		1	
Water outlet connection pipe		1	Used for outdoor drainage
Matched resistor		2	Enhances communication stability
Waterproof chassis cover		2	Used for centralized drainage
Connection pipe(26/28/33.5kW)		1	Connecting pipes

11.2 Optional Accessories

Optional accessories	Model	Packed dimensions (mm)	Net/gross weight (kg)	Function
Indoor branch joint kits	SDV4-HN01k	290×105×100	0.3 / 0.4	Distribute refrigerant to indoor units and balance flow resistance between outdoor units
	SDV4-HN02k	290×105×100	0.4 / 0.6	
	SDV4-HN03k	310×130×125	0.6 / 0.9	

Part 3

System Design and Installation

1 Preface to Part 3 30

2 Unit Placement and Installation 31

3 Drain Piping 34

4 Insulation 37

5 Charging Refrigerant 39

6 Installation in Areas of High Salinity 41

7 Appendix to Part 3 – System Commissioning Report 42

Outdoor Unit

1 Preface to Part 3

1.1 Notes for Installers Boxes

The information contained in this Engineering Data Book may primarily be of use during the system design stage of a Sinclair SODH/SIDH Units project. Additional important information which may primarily be of use during field installation hasbeen placed in boxes, such as the example below, titled “Notes for installers”.

Notes for installers

- Notes for installers boxes contain important information which may primarily be of use during field installation, rather than during desk-based system design.

1.2 Definitions

In this Engineering Data Book, the term “applicable legislation” refers to all national, local and other laws, standards, codes, rules, regulations and other legislation that apply in a given situation.

1.3 Precautions

All system installation including installation of piping and electrical works must only be carried out by competent and suitably qualified, certified and accredited professionals and in accordance with all applicable legislation.

2 Unit Placement and Installation

2.1 Outdoor Units

2.1.1 Placement considerations

Placement of outdoor units should take account of the following considerations:

- Air conditioners should not be exposed to direct radiation from a high-temperature heat source.
- Air conditioners should not be installed in positions where dust or dirt may affect heat exchangers.
- Air conditioners should not be installed in locations where exposure to oil or to corrosive or harmful gases, such as acidic or alkaline gases, may occur.
- Air conditioners should not be installed in locations where exposure to salinity may occur unless the anti-corrosion treatment for high-salinity areas customization option has been added and the precautions described in Part 3, 9 “Installation in Areas of High Salinity” are taken.
- Outdoor units should be installed in well-drained, well-ventilated positions that are as close as possible to the indoor units.

2.1.2 Spacing

Outdoor units must be spaced such that sufficient air may flow through each unit. Sufficient airflow across heat exchangers is essential for outdoor units to function properly. Figures 3-2.1 to 3-2.6 show spacing requirements in three different scenarios.

Figure 3-2.1: Single unit installation (unit: mm)

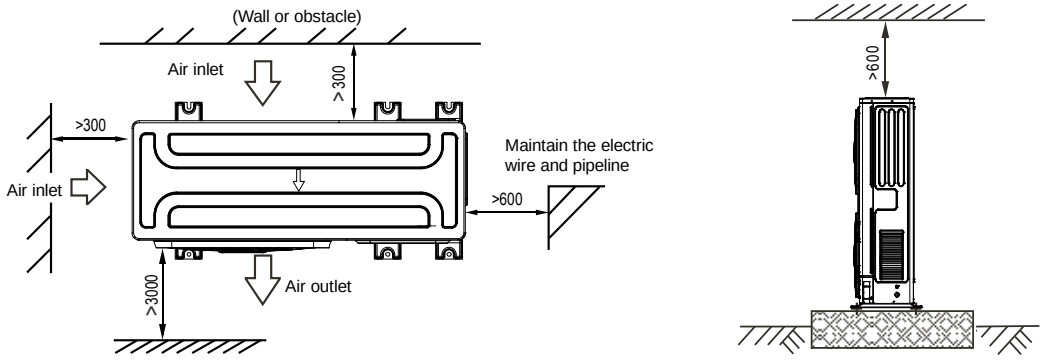

Figure 3-2.2: Parallel connect the two units or above (unit: mm)

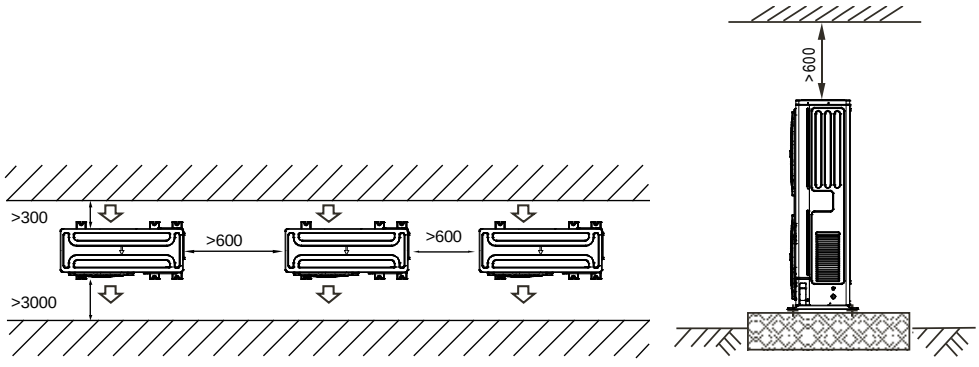

Figure 3-2.3: Parallel connect the front with rear sides (unit: mm)

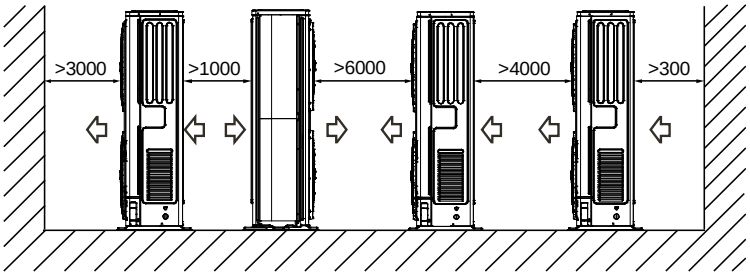

Outdoor Unit

2.1.3 Base structures

Outdoor unit base structure design should take account of the following considerations:

- A solid base prevents excess vibration and noise. Outdoor unit bases should be constructed on solid ground or on structures of sufficient strength to support the units' weight.
- Bases should be at least 200mm high to provide sufficient access for installation of piping.
- Either steel or concrete bases may be suitable.
- A typical concrete base design is shown in Figure 3-2.4. A typical concrete specification is 1 part cement, 2 parts sand and 6 parts crushed stone with Φ10mm steel reinforcing bar. The edges of the base should be chamfered.
- To ensure that all contact points are equally secure, bases should be completely level. Base design should ensure that the points on the units' bases designed for weight-bearing support are fully supported. Bolt spacings should be as per Figure 3-2.5.
- A drainage ditch should be provided to allow drainage of condensate that may form on the heat exchangers when the units are running in heating mode. The drainage should ensure that condensate is directed away from roadways and footpaths, especially in locations where the climate is such that condensate may freeze.

Figure 3-2.4: Outdoor unit typical concrete base structure design (unit: mm)

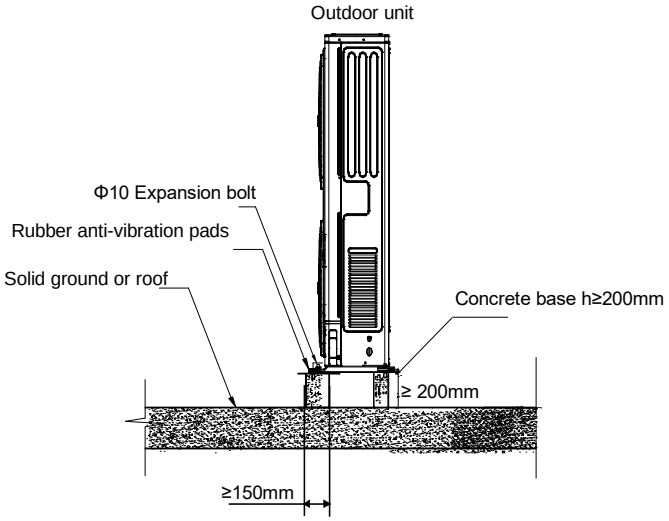

Figure 3-2.5: Expansion bolt positioning and space(unit: mm)

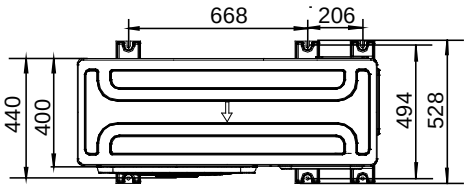

2.1.4 Centralized drainage

When centralized drainage is required, install two waterproof covers for the chassis, as shown in Figure 3-2.6. Install the water outlet union pipe and sealing ring on the chassis, and then connect the drainage pipe to complete centralized drainage installation.

Figure 3-2.6: Centralized drainage

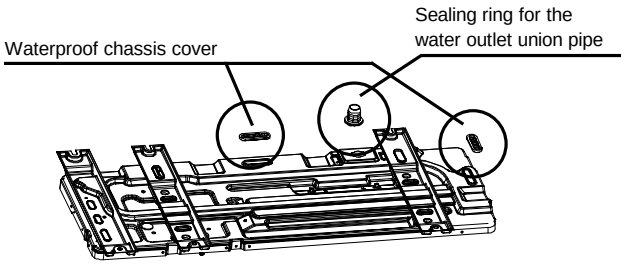

2.1.5 Acceptance and unpacking

Notes for installers

- When units are delivered check whether any damage occurred during shipment. If there is damage to the surface or outside of a unit, submit a written report to the shipping company.
- Check that the model, specifications and quantity of the units delivered are as ordered.
- Check that all accessories ordered have been included. Retain the Owner's Manual for future reference.

2.1.6 Hoisting

Notes for installers

- Do not remove any packaging before hoisting. If units are not packaged or if the packaging is damaged, use suitable boards or packing material to protect the units.
- Hoist one unit at a time, using two ropes to ensure stability.
- Keep units upright during hoisting, ensuring that the angle to the vertical does not exceed 30°.

2.2 Indoor Units

2.2.1 Placement considerations

Placement of indoor units should take account of the following considerations:

- Sufficient space for drain piping and for access during servicing and maintenance should be allowed.
- To ensure a good cooling/heating effect, short-circuit ventilation (where outlet air returns quickly to a unit's air inlet) should be avoided.
- To prevent excessive noise or vibration during operation, suspension rods or other weight-bearing fixings should typically be able to bear twice the unit's weight.

Notes for installers

- Before installing an indoor unit, check that the model to be installed is as specified in the construction drawings and confirm the correct orientation of the unit.
- Ensure that units are installed at the correct height.
- To allow smooth condensate drainage and to ensure unit stability (to prevent excessive noise or vibration), ensure that units are level to within 1° of the horizontal. If a unit is not level to within 1° of the horizontal, water leakage or abnormal vibration/noise may occur.

Outdoor Unit

3 Drain Piping

3.1 Design Considerations

Drain piping design should take account of the following considerations:

- Indoor unit condensate drain piping needs to be of sufficient diameter to carry the volume of condensate produced at the indoor units and installed at a slope sufficient to allow drainage. Discharge as close as possible to the indoor units is usually preferable.
- To prevent the drain piping becoming excessively long, consideration should be given to installing multiple drain piping systems, with each system having its own drainage point and providing drainage for a subset of the overall set of indoor units.
- The routing of drain piping should take into consideration the need to maintain sufficient slope for drainage whilst avoiding obstacles such as beams and ducting. The drain piping slope should be at least 1:100 away from indoor units. Refer to Figure 3-5.1.

Figure 3-5.1: Drain piping minimum slope requirement

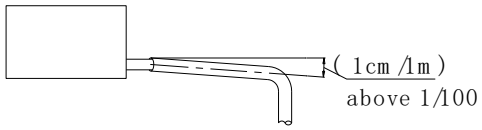

- To avoid backflow and other potential complications, two horizontal drain pipes should not meet at the same level. Refer to the Figure 3-5.2 for suitable connection arrangements. Such arrangements also allow the slope of the two horizontal pipes to be selected independently.

Figure 3-5.2: Drain piping joints – correct and incorrect configurations

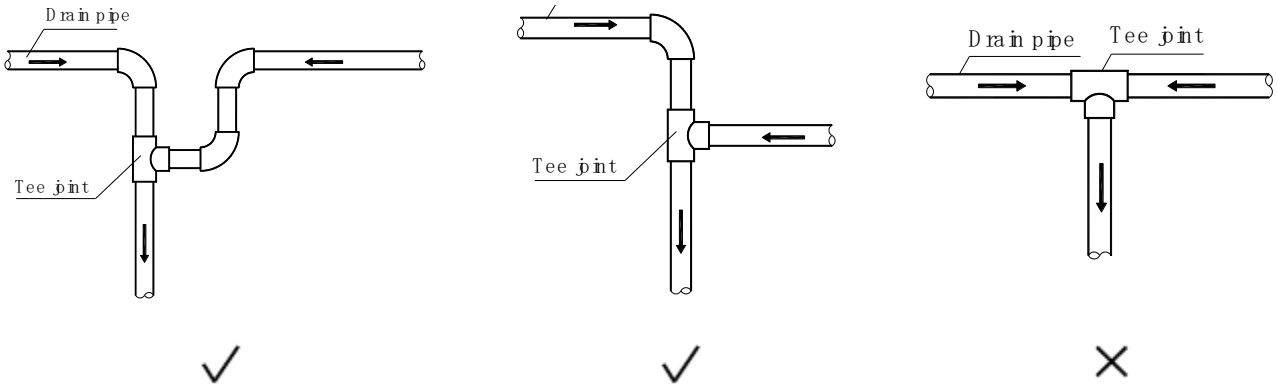

- Branch drain piping should join main drain piping from the top, as shown in Figure 3-5.3.
- Recommended support/hanger spacing is 0.8 – 1.0m for horizontal piping and 1.5 – 2.0m for vertical piping. Each vertical section should be fitted with at least two supports. For horizontal piping, spacing greater than those recommended leads to sagging and deformation of the pipe profile at the supports which impedes water flow and should therefore be avoided.
- Air vents should be fitted at the highest point of each drain piping system to ensure that condensation is discharged smoothly. U-bends or elbow joints should be used such that the vents face downwards, to prevent dust entering the piping. Refer to Figure 3-5.5. Air vents should not be installed too close to indoor unit lift pumps.

Figure 3-5.3: Branch drain piping joining main drain piping

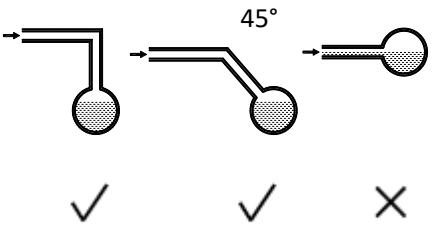

Figure 3-5.4: Effect of insufficient drain piping support

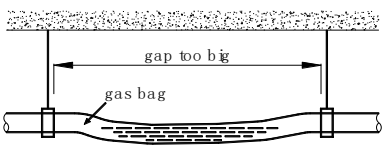

Figure 3-5.5: Drain piping air vents

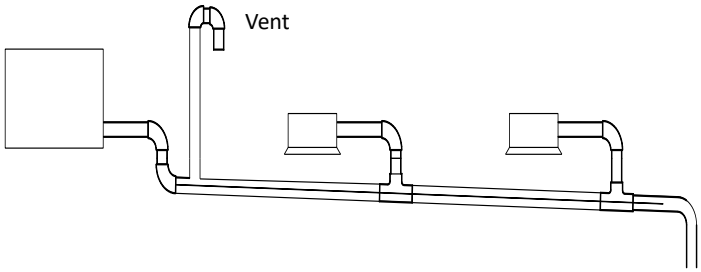

- Air conditioner drain piping should be installed separately from waste, rainwater and other drain piping and should not come into direct contact with the ground.
- Drain piping diameter should be not less than the indoor units' drain piping connection.
- To allow inspection and maintenance, the piping clamps shipped with units should be used to attach drain piping to indoor units – adhesive should not be used.
- Thermal insulation should be added to drain piping to prevent condensation forming. Thermal insulation should extend all the way to the connection with the indoor unit.
- Units with drain pumps should have separate drain piping systems from systems that use natural drainage.

3.2 Water Traps

For indoor units with a high negative pressure differential at the outlet of the drainage pan, a trap should be fitted to the drain piping to prevent poor drainage and/or water being blown back into the drainage pan. Traps should be arranged as in Figure 3-5.6. The vertical separation H should be in excess of 50mm. A plug may be fitted to allow cleaning or inspection.

Figure 3-5.6: Drain piping water traps

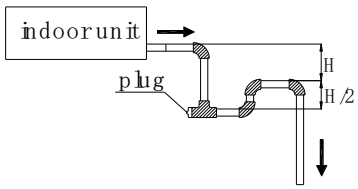

3.3 Selecting Piping Diameters

Select branch drainage piping (the drain piping connection to each unit) diameters according to indoor unit flow volume and select main drainage piping diameters according to the combined flow volume of the upstream indoor units. Use a design assumption of 2 liters of condensate per horsepower per hour. For example, the combined flow volume of three 2HP units and two 1.5HP units would be calculated as follows:

Combined flow volume = 3 x 2 L/HP/h × 2HP = 18 L/h
+ 2 x 2 L/HP/h × 1.5HP

Tables 3-5.1 and 3-5.2 specify the required piping diameters for horizontal and vertical branch piping and for main piping. Note that main piping should use PVC40 or larger.

Table 3-5.1: Horizontal drain piping diameters

PVC piping	Nominal diameter (mm)	Capacity (L/h)		Remarks
		Slope 1:50	Slope 1:100	
PVC25	25	39	27	Branch piping only
PVC32	32	70	50	
PVC40	40	125	88	Branch or main piping
PVC50	50	247	175	
PVC63	63	473	334	

Table 3-5.2: Vertical drain piping diameters

PVC piping	Nominal diameter (mm)	Capacity (L/h)	Remarks
PVC25	25	220	Branch piping only
PVC32	32	410	
PVC40	40	730	Branch or main piping
PVC50	50	1440	
PVC63	63	2760	
PVC75	75	5710	
PVC90	90	8280	

3.4 Drain Piping for Units with Lift Pumps

Drain piping for units with lift pumps should take account of the following additional considerations:

- A downward sloping section should immediately follow the vertically rising section adjacent to the unit, otherwise a water pump error will occur. Refer to Figure 3-5.7.
- Air vents should not be installed on vertically rising sections of drain piping, otherwise water may be discharged through the air vent or water flow may be impeded.

Figure 3-5.7: Downward sloping section of drain piping

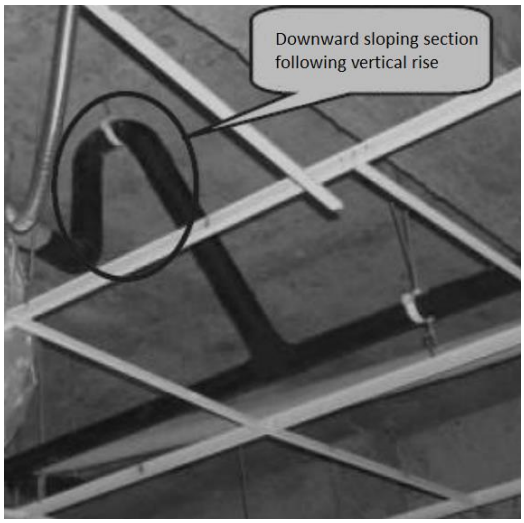

3.5 Drain Piping Installation

Notes for installers

Installation of the drain piping should proceed in the following order:

Indoor unit installation → Drain piping installation → Watertightness test → Drain piping insulation

Caution

- Ensure that all joints are firm and once the drain piping is all connected conduct a watertightness test and water flow test.
- Do not connect air conditioner drain piping to waste, rainwater or other drain piping and do not let air conditioner drain piping come into direct contact with the ground.
- For units with drain pumps, test that the drain pump functions properly by adding water to the unit's drainage pan and running the unit. To allow inspection and maintenance, the pipe clamps shipped with units should be used to attach drain piping to indoor units – adhesive should not be used.

3.6 Watertightness Test and Water Flow Test

Once installation of a drainage piping system is compete, watertightness and water flow tests should be performed.

Notes for installers

Watertightness test

- Fill the piping with water and test for leakages over a 24-hour period.

Water flow test (natural drainage test)

- Slowly fill the drainage pan of each indoor unit with at least 600ml of water through the inspection port and check that the water is discharged through the outlet of the drain piping.

Caution

- The drain plug in the drainage pan is for removing accumulated water prior to performing indoor unit maintenance. During normal operation, the drain should be plugged to prevent leakage.

4 Insulation

4.1 Refrigerant Piping Insulation

4.1.1 Purpose

During operation, the temperature of the refrigerant piping varies. Insulation is required to ensure unit performance and compressor lifespan. During cooling, the gas pipe temperature can be very low. Insulation prevents condensation forming on the piping. During heating, the gas pipe temperature can rise to as high as 100°C. Insulation serves as necessary protection from burns.

4.1.2 Selecting insulation materials

Refrigerant piping insulation should be closed-cell foam of B1 fire resistance rating that can withstand a constant temperature of over 120°C and that complies with all applicable legislation.

4.1.3 Thickness of insulation

Minimum thicknesses for refrigerant piping insulation are specified in Table 3-6.1. In hot, humid environments, the thickness of insulation should be increased over and above the specifications in Table 3-6.1.

Table 3-6.1: Refrigerant piping insulation thickness

Pipe outer diameter (mm)	Minimum insulation thickness (mm) Humidity < 80%RH	Minimum insulation thickness (mm) Humidity ≥ 80%RH
Φ6.35	15	20
Φ9.53		
Φ12.7		
Φ15.9		
Φ19.1		
Φ22.2		
Φ25.4		
Φ28.6		
Φ31.8		
Φ38.1		
Φ41.3	20	25
Φ44.5		
Φ54.0		

Outdoor Unit

4.1.4 Installation of piping insulation

With the exception of joint insulation, insulation should be applied to piping before fixing the piping in place. Insulation at joints in refrigerant piping should be applied after the gas tightness test has been completed.

Notes for installers

- Installation of insulation should be carried out in a manner suited to the type of insulation material being used.
- Ensure there are no gaps at the joints between sections of insulation.
- Do not apply tape too tightly as doing so may shrink insulation, reducing its insulating properties leading to condensation and loss of efficiency.
- Insulate gas and liquid pipes separately, otherwise heat exchange between the two sides will greatly impact efficiency.
- Do not bind the separately insulated gas and liquid pipes together too tightly as doing so can damage the joints between sections of insulation.

4.1.5 Installation of joint insulation

Insulation at joints in the refrigerant piping should be installed after the gas tightness test has been successfully completed. The procedure at each joint is as follows:

1. Cut a section of insulation 50 to 100mm longer than the gap to be filled. Ensure that the cross-sectional and longitudinal openings are all cut evenly.
2. Embed the section into the gap ensuring that the ends abut tightly to the sections of insulation either side of the gap.
3. Glue the longitudinal cut and the joints with the sections of insulation either side of the gap.
4. Seal the seams with tape.

Figure 3-6.1: Installation of joint insulation (unit: mm)

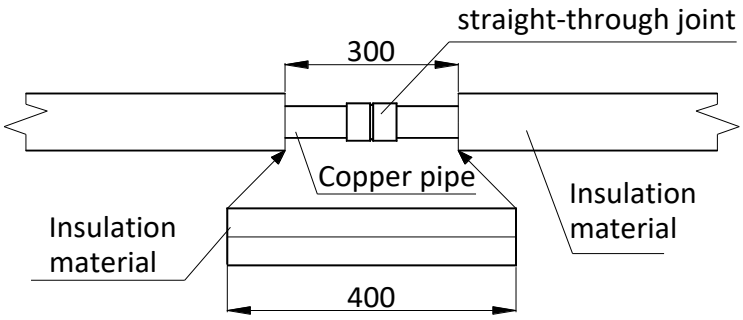

4.2 Drain Piping Insulation

- Use rubber/plastic insulating tube with a B1 fire resistance rating.
- The insulation should typically be in excess of 10mm thick.
- For drain piping installed inside a wall, insulation is not required.
- Use suitable adhesive to seal seams and joints in the insulation and then bind with cloth reinforced tape of width not less than 50mm. Ensure tape is fixed firmly to avoid condensation.
- Ensure the drain piping insulation adjacent to the indoor unit drainage water outlet is fixed to the unit itself using adhesive, to prevent condensation and dripping.

4.3 Ducting Insulation

- Suitable insulation should be added to ducting in according with all applicable legislation.

5 Charging Refrigerant

5.1 Calculating Additional Refrigerant Charge

The additional refrigerant charge required depends on the lengths and diameters of the outdoor and indoor liquid pipes. Table 3-7.1 shows the additional refrigerant charge required per meter of equivalent pipe length for different diameters of pipe. The total additional refrigerant charge is obtained by summing the additional charge requirements for each of the outdoor and indoor liquid pipes, as in the following formula, where L_1 to L_8 represent the equivalent lengths of the pipes of different diameters. Assume 0.5m for the equivalent pipe length of each branch joint.

Additional refrigerant charge R (kg) = L_1 (**Φ6.35**) × 0.022
+ L_2 (**Φ9.53**) × 0.057
+ L_3 (**Φ12.7**) × 0.110
+ L_4 (**Φ15.9**) × 0.170
+ L_5 (**Φ19.1**) × 0.260
+ L_6 (**Φ22.2**) × 0.360

Table 3-7.1: Additional refrigerant charge

Liquid side piping (mm)	Additional refrigerant charge per meter of equivalent length of piping (kg)
Φ6.35	0.022
Φ9.53	0.057
Φ12.7	0.110
Φ15.9	0.170
Φ19.1	0.260
Φ22.2	0.360

5.2 Adding Refrigerant

Notes for installers

Caution

- Only charge refrigerant after performing a gas tightness test and vacuum drying.
- Never charge more refrigerant than required as doing so can lead to liquid hammering.
- Only use refrigerant R410A - charging with an unsuitable substance may cause explosions or accidents.
- Use tools and equipment designed for use with R410A to ensure required pressure resistance and to prevent foreign materials from entering the system.
- Refrigerant must be treated in accordance with applicable legislation.
- Always use protective gloves and protect your eyes when charging refrigerant.
- Open refrigerant containers slowly.

Procedure

The procedure for adding refrigerant is as follows:

Step 1

- Calculate additional refrigerant charge R (kg) (see Part 3, 5.1 “Calculating Additional Refrigerant Charge”)

Step 2

- Place a tank of R410A refrigerant on a weighing scale. Turn the tank upside down to ensure refrigerant is charged in a liquid state. (R410A is a blend of two different chemicals compounds. Charging gaseous R410A into the system could mean that the refrigerant charged is not of the correct composition).
- After vacuum drying (see Part 3, **Error! Reference source not found.** “Vacuum Drying”), the blue and red pressure gauge hoses should still be connected to the pressure gauge and to the master unit stop valves.
- Connect the yellow hose from the pressure gauge to the R410A refrigerant tank.

Box continued on next page …

Outdoor Unit

… box continued from previous page

Step 3

- Open the valve where the yellow hose meets the pressure gauge, and open the refrigerant tank slightly to let the refrigerant eliminate the air. Caution: open the tank slowly to avoid freezing your hand.
- Set the weighing scale to zero.

Step 4

- Open the three valves on the pressure gauge to begin charging refrigerant.
- When the amount charged reaches R (kg), close the three valves. If the amount charged has not reached R (kg) but no additional refrigerant can be charged, close the three valves on the pressure gauge, run the outdoor unit in cooling mode, and then open the yellow and blue valves. Continue charging until the full R (kg) of refrigerant has been charged, then close the yellow and blue valves. Note: Before running the system, be sure to complete all the pre-commissioning checks as listed in Part 3, **Error! Reference source not found.** "Pre-commissioning Checks" and be sure to open all stop valves as running the system with the stop valves closed would damage the compressor.

Figure 3-7.1: Charging refrigerant

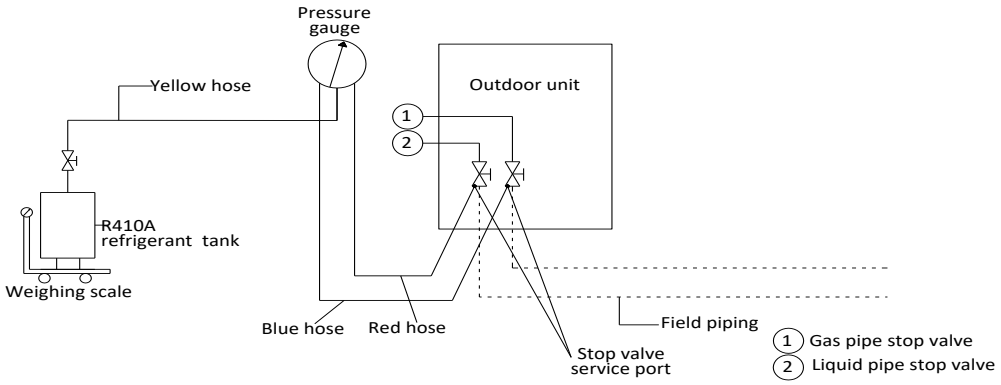



Pressure gauge

6 Installation in Areas of High Salinity

6.1 Caution

Do not install outdoor units where they could be directly exposed to sea air. Corrosion, particularly on the condenser and evaporator fins, could cause product malfunction or inefficient performance.

Outdoor units installed in seaside locations should be placed such as to avoid direct exposure to the sea air and additional anticorrosion treatment options should be selected, otherwise the service life of the outdoor units will be seriously affected.

Air conditioning installed in seaside locations should be run regularly as the running of the outdoor unit fans helps prevent build-up of salt on the outdoor unit heat exchangers.

6.2 Placement and Installation

Outdoor units should be installed 300m or more from the sea. If possible, well-ventilated indoor locations should be chosen. If it is necessary to install outdoor units outside, direct exposure to the sea air should be avoided. A canopy should be added to shield the units from sea air and rain.

Ensure that base structures drain well so that outdoor unit footings do not become waterlogged. Check that outdoor unit casing drainage holes are not blocked.

6.3 Inspection and maintenance

In addition to standard outdoor unit servicing and maintenance, the following additional inspections and maintenance should be undertaken for outdoor units installed in seaside locations:

- A comprehensive post-installation inspection should check for any scratches or other damage to painted surfaces and any damaged areas should be repainted/repaired immediately.
- The units should be regularly cleaned using (non-salty) water to remove any salt that has accumulated. Areas cleaned should include the condenser, the refrigerant piping system, the outside surface of the unit casing and the outside surface of the electric control box.
- Regular inspections should check for corrosion and if necessary corroded components should be replaced and/or anti-corrosion treatments should be added.

Outdoor Unit

7 Appendix to Part 3 – System Commissioning Report

A total of up to 4 report sheets should be completed for each system:

- One Sheet A, one Sheet B and one Sheet C per system.
- One Sheet D per outdoor unit.

SODH/SIDH Series System Commissioning Report – Sheet A

SYSTEM INFORMATION			
Project name and location		Customer company	
System name		Installation company	
Commissioning date		Agent company	
Outdoor ambient temp.		Commissioning engineer	

Outdoor unit information	Model	Serial no.	Power supply (V)

COOLING MODE PARAMETER RECORD
(After running in cooling mode for one hour)

OUTDOOR UNIT			
Compressor suction pipe temperature		Current (A)	
System pressure at check port		Within normal range?	

INDOOR UNITS
(Sample of over 20% of the indoor units including the unit farthest from the outdoor unit)

Room no.	Model	Address	Set temp. (°C)	Inlet temp. (°C)	Outlet temp. (°C)	Drainage OK?	Abnormal noise/ vibration?

Outdoor Unit

SODH/SIDH Series System Commissioning Report – Sheet B

SYSTEM INFORMATION			
Project name and location		**Customer company**	
System name		**Installation company**	
Commissioning date		**Agent company**	
Outdoor ambient temp.		**Commissioning engineer**	

	Model	Serial no.	Power supply (V)
Outdoor unit information			

COOLING MODE PARAMETER RECORD
(After running in heating mode for one hour)

OUTDOOR UNIT			
Compressor suction pipe temperature		**Current (A)**	
System pressure at check port		**Within normal range?**	

INDOOR UNITS
(Sample of over 20% of the indoor units including the unit farthest from the outdoor unit)

Room no.	Model	Address	Set temp. (°C)	Inlet temp. (°C)	Outlet temp. (°C)	Drainage OK?	Abnormal noise/ vibration?

SODH/SIDH Series System Commissioning Report – Sheet C

Project name and location		System name	

RECORD OF ISSUES SEEN DURING COMMISSIONING				
No.	Description of observed issue	Suspected cause	Troubleshooting undertaken	Serial no. of relevant unit
1				
2				
3				

OUTDOOR UNIT FINAL CHECKLIST	
SW2 system check performed?	
Any abnormal noise?	
Any abnormal vibration?	
Fan rotation normal?	

	Commissioning engineer	Dealer	Sinclair representative
Name:			
Signature:			
Date:			

Outdoor Unit

SODH/SIDH Series System Commissioning Report – Sheet D

Project name and location		System name	

DSP1 content	Parameters displayed on DSP2	Remarks	Observed values	
			Cooling mode	Heating mode
0.--	Unit capacity (Hp)	Actual value = value displayed		
1.--	Setting number of indoor units			
2.--	Operating mode	Refer to Note 1		
3.--	Fan speed index	Refer to Note 2		
4.--	Total capacity of outdoor unit			
5.--	Total capacity requirement of indoor units			
6.--	Main heat exchanger pipe (T3) temperature (°C)	Actual value = value displayed		
7.--	Outdoor ambient (T4) temperature (°C)	Actual value = value displayed		
8.--	Inverter compressor discharge temperature (°C)	Actual value = value displayed		
9.--	Invert module (TF) temperature (°C)	Actual value = value displayed		
10.--	Refrigerant cooling pipe (TL) temperature (°C)	Actual value = value displayed		
11.--	Compressor discharge pressure (MPa)	Actual value = value displayed × 0.1		
12.--	Discharge superheat degree (°C)	Actual value = value displayed		
13.--	EXVA position	Actual value = value displayed × 8		
14.--	Actual current (A)	Actual value = value displayed		
15.--	Inverter compressor current (A)	Actual value = value displayed		
16.--	Actual voltage (V)	Actual value = value displayed		
17.--	DC bus voltage (V)	Actual value = value displayed		
18.--	Indoor heat exchanger pipe (T2/T2B) temperature (°C)	Actual value = value displayed		
19.--	Priority mode	Refer to Note 3		
20.--	Number of indoor units currently in communication with outdoor unit	Actual value = value displayed		
21.--	Number of indoor units currently operating	Actual value = value displayed		
22.--	Most recent error or protection code	“nn“ is displayed if no error or protection events have occurred since start-up		
23.--	Software version			
-- --	--	End		

Notes:

1. Operating mode:
   - 0: off; 2: cooling; 3: heating; 4: forced cooling.
2. The fan speed index is related to the fan speed in rpm and can take any integer value in the range 1 (slowest) to 11 (fastest).
3. Priority mode:
   - 0: heating priority; 1: cooling priority; 2: first ON priority; 3: heating only; 4: cooling only; 5: test mode 1; 6: test mode 2.

NOTE CONCERNING PROTECTION OF ENVIRONMENT

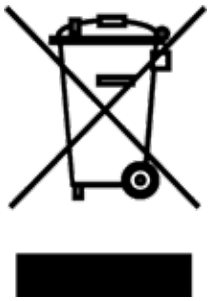

This product must not be disposed of via normal household waste after its service life, but must be taken to a collection station for the recycling of electrical and electronic devices. The symbol on the product, the operating instructions or the packaging indicate such disposal procedures. The materials are recyclable in accordance with their respective symbols. By means of re-use, material recycling or any other form of recycling old appliances you are making an important contribution to the protection of our environment. Please ask your local council where your nearest disposal station is located.

INFORMATION CONCERNING USED REFRIGERANT MEDIUM

This unit is containing fluorinated gases included in the Kyoto protocol.
The maintenance and the liquidation must be carried out by qualified personnel.
The composition of the cooling medium R410a: (50% HFC-32, 50% HFC-125)
Type of refrigerant: R410a
The quantity of the refrigerant: Please see the unit label.
The value GWP: 2088 (1 kg R410a = 2,088 t CO_2 eq)
GWP = Global Warming Potential

In case of quality problem or other please contact your local supplier or authorized service center.
Emergency number: 112

PRODUCER

SINCLAIR CORPORATION Ltd.
16 Great Queen Street
WC2B 5AH London
United Kingdom
www.sinclair-world.com

This product was manufactured in China (Made in China).

REPRESENTATIVE

SINCLAIR Global Group s.r.o.
Purkynova 45
612 00 Brno
Czech Republic

TECHNICAL SUPPORT

SINCLAIR Global Group s.r.o.
Purkynova 45
612 00 Brno
Czech Republic
Tel.: +420 800 100 285 | Fax: +420 541 590 124
www.sinclair-solutions.com | info@sinclair-solutions.com

CE

16126000A29727 V1.0