Service Manual

Ver. 01 | 13-01-2022

EN

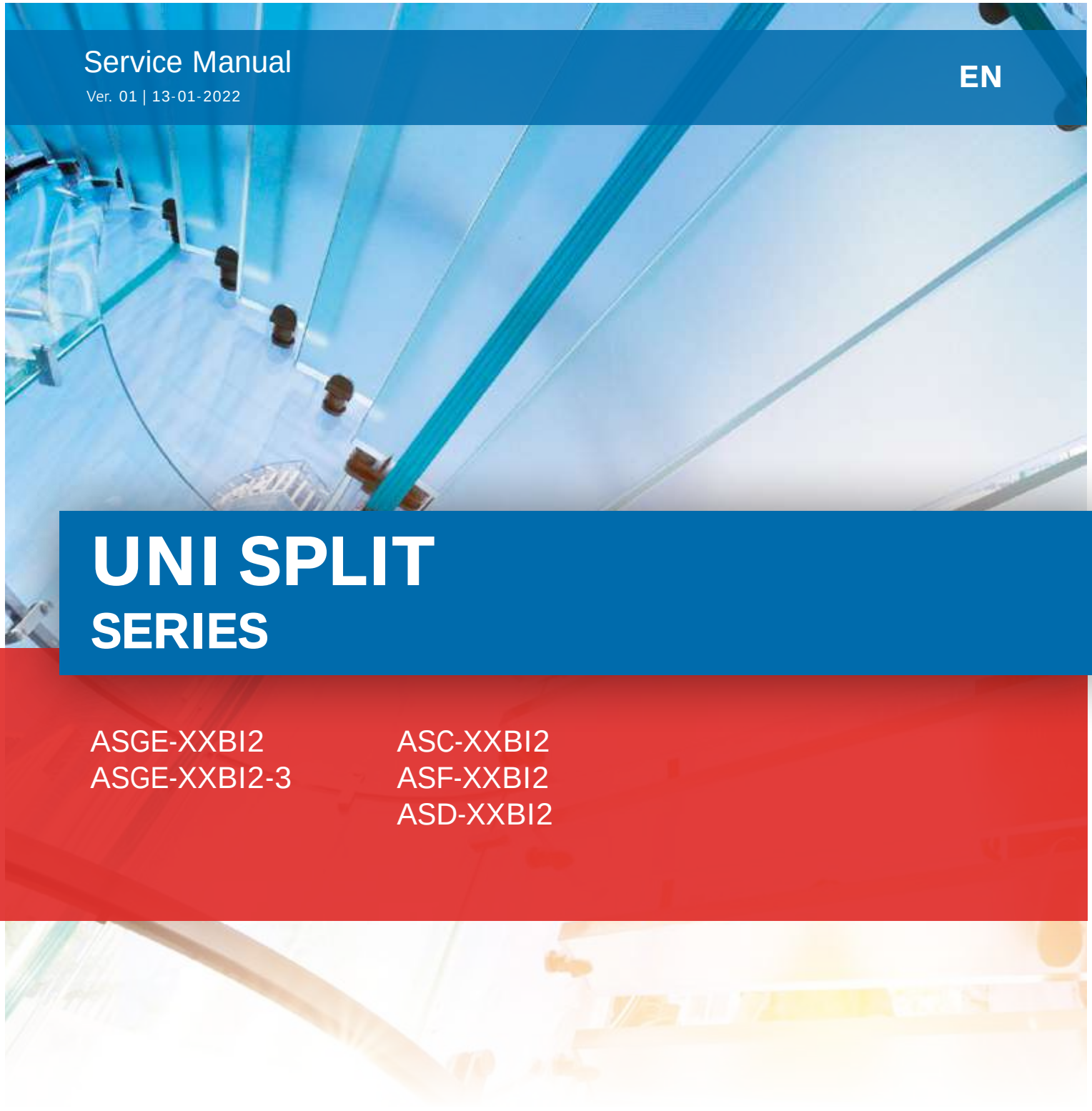

UNI SPLIT
SERIES

ASGE-XXBI2
ASGE-XXBI2-3
ASC-XXBI2
ASF-XXBI2
ASD-XXBI2

sinclair
AIR CONDITIONING

IMPORTANT NOTE:

Read this manual carefully before installing or operating your new air conditioning unit.
Make sure to save this manual for future reference.

Foreword

Thank you for choosing Sinclair UNI split air conditioners. In order to correctly install and use our units,and for the satisfactory operation effect, please read this manual carefully.

This manual specifies safe operation requirements from perspectives of product introduction, control, troubleshooting and maintenance, as well as basic principles and implementation methods. Professional operators must abide by relevant national (local) safety requirements and technical specifications set forth in this manual during operations; otherwise, the air conditioning system may fail or be damaged, and personnel safety accident may also occur.

Safety Notice

	The air conditioner is charged with inflammable refrigerant R32.
	Before using the air conditioner, please first read the instruction manual.
	Before installing the air conditioner, please first read the instruction manual.
	Before repairing the air conditioner, please first read the technical service manual.

Compared with common refrigerant, R32 is an environmental-friendly refrigerant that has no harm to the ozone layer and weak greenhouse effect. Its GWP is 675. Because of its thermodynamic characteristics, R32 requires a smaller charging quantity to reach high energy efficiency. It is inflammable and odourless, but may cause explosion under certain circumstances.

CONTENTS

Safety Notice on Maintenance 1

Safety Notice on Operation 4

1. Product Introduction 6

1.1 Lists of Units 6

1.2 Electrical Parameters 11

2. Control 12

2.1 Operation Mode 12

2.2 Control Mode 13

2.3 Functions 17

3. Troubleshooting 28

3.1 Wiring Diagrams 28

3.2 PCB Layout 38

3.3 Error Code 57

3.4 Troubleshooting 61

3.5 Failures Not Caused by Errors 79

4. Maintenance 81

4.1 System Diagram 81

4.2 Connection Pipe Vacuum Pumping 81

4.3 Refrigerant Charging 82

4.4 Maintenance of Major Components 84

4.5 Removal of Major Components 95

Appendices 153

1. Resistance/Temperature Lists of Temperature Sensors 153

1.1 Voltage List of 15 KΩ Temperature Sensors (including ODU and IDO temperature sensors) 153

1.2 Voltage List of 20 KΩ Pipeline Temperature Sensors (including temperature sensors for defroster, IDU and ODU pipes) 155

1.3 Voltage List of 50 KΩ Discharge Temperature Sensors (including discharge air temperature sensor) 157

2. Temperature/Pressure List of Refrigerant 160

3. Refrigerant Notice/Concentration 160

Safety Notice on Maintenance

PROHIBITED:

(1) Do not pierce or burn.

(2) Please note that refrigerant may be odorless.

(3) The appliance shall be stored in a room without continuously operating ignition sources (For example: open flames, an operating gas appliance or an operating electric heater).

(4) Indoor unit adopts special joints that can't be detached. The installation method is the same with the common joints. However, because the joint can't be detached, if it is badly connected and causes leakage, it needs to be cut and replaced by a new one through welding.

(5) Using unsuitable parts or tools may lead to electric shock or fire hazard.

(6) If refrigerant leaks during maintenance, please ventilate the room immediately. Heavy leakage may lead to breathing difficulty, severe injury or death.

(7) Disconnect power before disassembling the appliance for maintenance.

(8) The appliance should be maintained and cared by authorized technical personnel with necessary qualifications.

(9) The appliance shall be stored in a well-ventilated area where the room size corresponds to the room area as specified for operation.

(10) The air conditioner should be grounded to avoid electric shock. Do not connect the ground wire to gas pipe, water pipe, lightning arrester or telephone wire.

(11) According to federal/state/local laws and regulations, all packages and transportation materials, including nails, metal or wooden parts, and plastic packing material, must be treated in a safe way.

WARNING:

(1) If the working place is more than 2ms high, please wear a safety helmet, gloves and a safety belt.

(2) Never mix any other substances except the specified refrigerant into the refrigerant circuit.

(3) When re-locating the appliance, check whether the new location is strong enough to withstand the weight of the appliance.

(4) If there is refrigerant leak, please fix the leak before charging in the refrigerant. After refrigerant is charged, check for refrigerant leaks. If you cannot spot the leak, stop the maintenance work. Please evacuate the system and close the service valve to prevent refrigerant leaking into the room.

(5) Prepare suitable tools and protectors.

(6) If you need to carry out maintenance or check the electric circuit without cutting off the power, please be careful not to touch the electrical parts.

(7) Any person who is involved with working on or breaking into a refrigerant circuit should hold a current valid certificate from an industry-accredited assessment authority, which authorises their competence to handle refrigerants safely in accordance with an industry recognised assessment specification.

(8) Servicing shall only be performed as recommended by the equipment manufacturer. Maintenance and repair requiring the assistance of other skilled personnel shall be carried out under the supervision of the person competent in the use of flammable refrigerants.

(9) The appliance shall be installed in accordance with national wiring regulations.

(10) The fixed wires connecting to the appliance must be configured with all-pole disconnection device under voltage grade III according to wiring rules.

(11) Air conditioner should be stored with protective measures against mechanical damage caused by accident.

(12) If the installation space for air conditioner pipe is too small, adopt a protective measure to prevent the pipe from physical damage.

(13) During installation, use the specialized accessories and components, otherwise water leakage, electric shock or fire hazard may occur.

(14) Please install the air conditioner in a secure place that can withstand the weight of air conditioner. Insecure installation may cause the air conditioner falling down and lead to injury.

(15) Be sure to adopt independent power circuit. If the power cord is damaged, it must be repaired by the manufacturer, service agent or other professional agents.

(16) The air conditioner can be cleaned only after it is turned off and power-disconnected, otherwise electric shock may occur.

(17) The air conditioner is not intended to be cleaned or maintained by children without supervision.

(18) Do not alter the setting of pressure sensor or other protective devices. If the protective devices are short-circuited or changed against rules, fire hazard or even explosion may occur.

(19) Do not operate the air conditioner with wet hands. Do not wash or sprinkle water on the air conditioner, otherwise malfunction or electric shock will occur.

(20) Do not dry the filter with naked flame or an air blower; otherwise the filter will be out of shape.

(21) If the unit is to be installed in a small space, please adopt protective measures to prevent the

concentration of refrigerant from exceeding the allowable safety limit; Excessive refrigerant leakage may lead to explosion.

(22) When installing or re-installing the air conditioner, please keep the refrigerant circuit away from substances other than the specified refrigerant, such as air. Any presence of foreign substances will cause abnormal pressure change or even explosion, resulting in injury.

(23) Only professionals are allowed to carry on daily maintenance.

(24) Before contacting any wire, make sure power is cut off.

(25) Do not let any inflammable objects near the unit.

(26) Do not use organic solvent to clean the air conditioner.

(27) If you need to replace a component, please ask a professional to repair with a component supplied by the original manufacturer so as to ensure the unit's quality.

(28) Improper operation may get the unit broken, hit by electric shock or cause fire.

(29) Do not make the air conditioner wet or electric shock may be lead, ensure that the air conditioner will not be cleaned by water rinsing under any circumstance.



NOTICE:

(1) If the appliance is maintained at a humid place, it should be grounded to avoid electric shock.

(2) Never repair the unit with wet hands. Operating the unit with wet hands may lead to electric shock.

(3) If the unit is not correctly grounded, please check and fix it.

(4) Before cleaning the unit, please disconnect power to prevent the inner fan from starting up and running at high speed; Otherwise personal injury may occur.

(5) Measure the insulation resistance after maintenance. The resistance must be 1M or higher. Bad insulation may lead to electric shock.

(6) Welding and cutting work must be done in a well-ventilated place.

(7) Gas appliances, heaters and other fire sources should be kept away from the installation and maintenance site.

(8) Maintenance should be done according to suggestions of the manufacturer.

(9) Maintenance should be done only after the refrigerant is completely reclaimed from the unit.

(10) Do not put a finger or other objects into the air inlet or air return grill.

(11) Please adopt safety protection measures before touching the refrigerant pipe, otherwise your hands may be hurt.

(12) Please arrange the drain pipe according to the instruction manual.

(13) Never stop the air conditioner by directly cutting off the power.

(14) Please select the proper copper pipe according to the requirement for pipe thickness.

(15) Adopt proper measures to protect the outdoor unit from small animals because they may damage the electric components and cause malfunction of the air conditioner.

(16) Indoor unit can only be installed indoors while outdoor unit can be installed either indoors or outdoors. Never install the air conditioner in the following places:

1) Places with oil smoke or volatile liquid: plastic parts may deteriorate and fall off or even cause water leakage.

2) Places with corrosive gas: copper pipe or the welding parts may be corroded and cause refrigerant leakage.

OBSERVED:

(1) After the maintenance work is done, check the drainage of indoor unit.

(2) Do not tilt the unit, otherwise, water may spill out from the unit and make the floor and furniture wet.

(3) Disassembly of the unit, handling of the refrigerant, oil and accessories should all be done according to applicable local rules and regulations.

(4) If wired controller is to be used, it should be connected first before powering up the unit, otherwise the wired controller may not be able to use.

(5) When installing the indoor unit, keep it away from television, wireless waves, and fluorescent.

(6) Only use soft dry cloth or slightly wet cloth with neutral detergent to clean the casing of the air conditioner.

(7) Before operating the unit under low temperature, connect it to power for 8 hours. If it is stopped for a short time, for example, one night, do not cut off the power (This is to protect the compressor).

Safety Notice on Operation

PROHIBITED:

(1) Never try to modify the unit, otherwise, it may cause electric shock, overheat or fire hazard.

(2) If the power cord or conducting wires are scratched, please replace them.

(3) Never use connected or extended power cord or share the power socket with other appliances.

(4) Prepare a specialized power circuit for the appliance.

WARNING:

(1) If the power plug is dirty, please clean it before inserting it to the power socket. If the power plug is loose, please tighten it up.

(2) Do not damage the power cord. A damaged or refitted power cord may lead to electric shock or fire hazard.

(3) Check frequently whether the appliance is in good condition.

NOTICE:

(1) After changing the batteries of remote controller, please discard them to avoid being swallowed by children.

(2) When the unit is working, do not remove the fan cover.

(3) Do not use organic solvents to wipe the controller operating panel.

(4) Before cleaning the unit, cut off the power supply.

1. Product Introduction

1.1 Lists of Units

1.1.1 List of ODUs

Model	Power Supply V/Ph/Hz	Appearance
ASGE-12BI2	220-240V ~50/60Hz	
ASGE-18BI2		
ASGE-24BI2		
ASGE-30BI2		
ASGE-36BI2		
ASGE-42BI2		
ASGE-48BI2		

Model	Power Supply V/Ph/Hz	Appearance
ASGE-36BI2-3	380-415V 3N~50/60Hz	
ASGE-42BI2-3		
ASGE-48BI2-3		
ASGE-60BI2-3		

1.1.2 List of IDUs

Model		Rated Cooling/ Heating Capacity (kW)	Power Supply V/Ph/Hz	Appearance
Cassette Type	ASC-12BI2	3.50/4.00	220-240V ~50/60Hz	
	ASC-18BI2	5.00/5.60		
	ASC-24BI2	7.10/7.80		
	ASC-30BI2	8.50/8.80		
	ASC-36BI2	10.50/11.50		
	ASC-42BI2	12.10/13.50		
	ASC-48BI2	13.40/15.50		
	ASC-60BI2	14.50/17.00		

Model		Rated Cooling/ Heating Capacity (kW)	Power Supply V/Ph/Hz	Appearance
Duct Type	ASD-12BI2	3.50/4.00	220-240V ~50/60Hz	
	ASD-18BI2	5.30/5.60		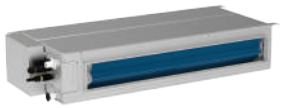
	ASD-24BI2	7.10/8.00		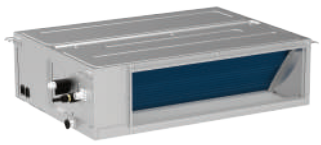
	ASD-30BI2	8.50/8.80		
	ASD-36BI2	10.50/11.50		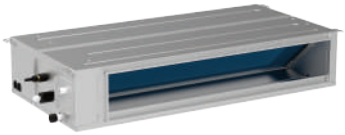
	ASD-42BI2	12.10/13.50		
	ASD-48BI2	13.40/15.50		
	ASD-60BI2	16.00/17.00		

Note:

The indoor units model with PS or PHS mean the indoor unit with water pump.

Model		Rated Cooling/ Heating Capacity (kW)	Power Supply V/Ph/Hz	Appearance
Floor Ceiling Type	ASF-12BI2	3.50/4.00	220-240V ~50/60Hz	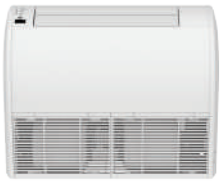
	ASF-18BI2	5.30/5.60		
	ASF-24BI2	7.10/7.70		
	ASF-30BI2	8.50/8.80		
	ASF-36BI2	10.00/11.50		
	ASF-42BI2	12.10/13.50		
	ASF-48BI2	13.40/15.50		
	ASF-60BI2	16.00/17.00		

Note:

1 Ton =12000Btu/h = 3.517kW.

The outdoor unit is generally suitable to any one of the three types of indoor units with no need of change (limited to cassette type, duct type and floor ceiling type).

1.2 Electrical Parameters

Model	Power supply	Circuit breaker capacity	Min. sectional area of power cord
	V/Ph/Hz	A	mm²
ASGE-12BI2	220-240V ~50/60Hz	13	1.5
ASGE-18BI2		16	2.5
ASGE-24BI2		16	2.5
ASGE-30BI2		16	2.5
ASGE-36BI2		25	4.0
ASGE-42BI2		25	4.0
ASGE-48BI2		25	4.0
ASGE-36BI2-3	380-415V 3N~50/60Hz	10	1.5
ASGE-42BI2-3		10	1.5
ASGE-48BI2-3		13	1.5
ASGE-60BI2-3		13	1.5

Model	Power Supply	Fuse Capacity	Circuit Breaker Capacity	Min. Sectional Area of Power Cord
	V/Ph/Hz	A	A	mm²
Indoor unit	220-240V ~50/60Hz	3.15	6	1.0

NOTICE:

① Fuse is located on the main board.

② Install a circuit breaker near the outdoor units with at least 3mm contact gap. The units must be able to be plugged or unplugged.

③ Circuit breaker and power cord specifications listed in the above table are determined based on the maximum power input of the units.

④ Specifications of circuit breaker are based on a working condition where the working temperature is 40°C. If working condition changes, please adjust the specifications according to national standards.

⑤ Adopt 1.0mm² power cords between indoor and outdoor units. The maximum length of 12k-30k units is 30m and the maximum length of 36k-60k units is 75m. Please select a proper length according to local conditions. To be in compliance EN 55014, it is necessary to use 8 meters long wire.

⑥ Adopt 2pc of 0.75mm² power cords to be the communication cords between wired controller and indoor unit. The maximum length is 30m. Please select a proper length according to local conditions. Communication cords must not be twisted together. To be in compliance with EN 55014, it is necessary to use 8 meters long wire.

⑦ The wire gauge of communication cord should not be less than 0.75mm². It's recommended to use 0.75mm² power cords as the communication cords.

2. Control

2.1 Operation Mode

2.1.1 Cooling Mode

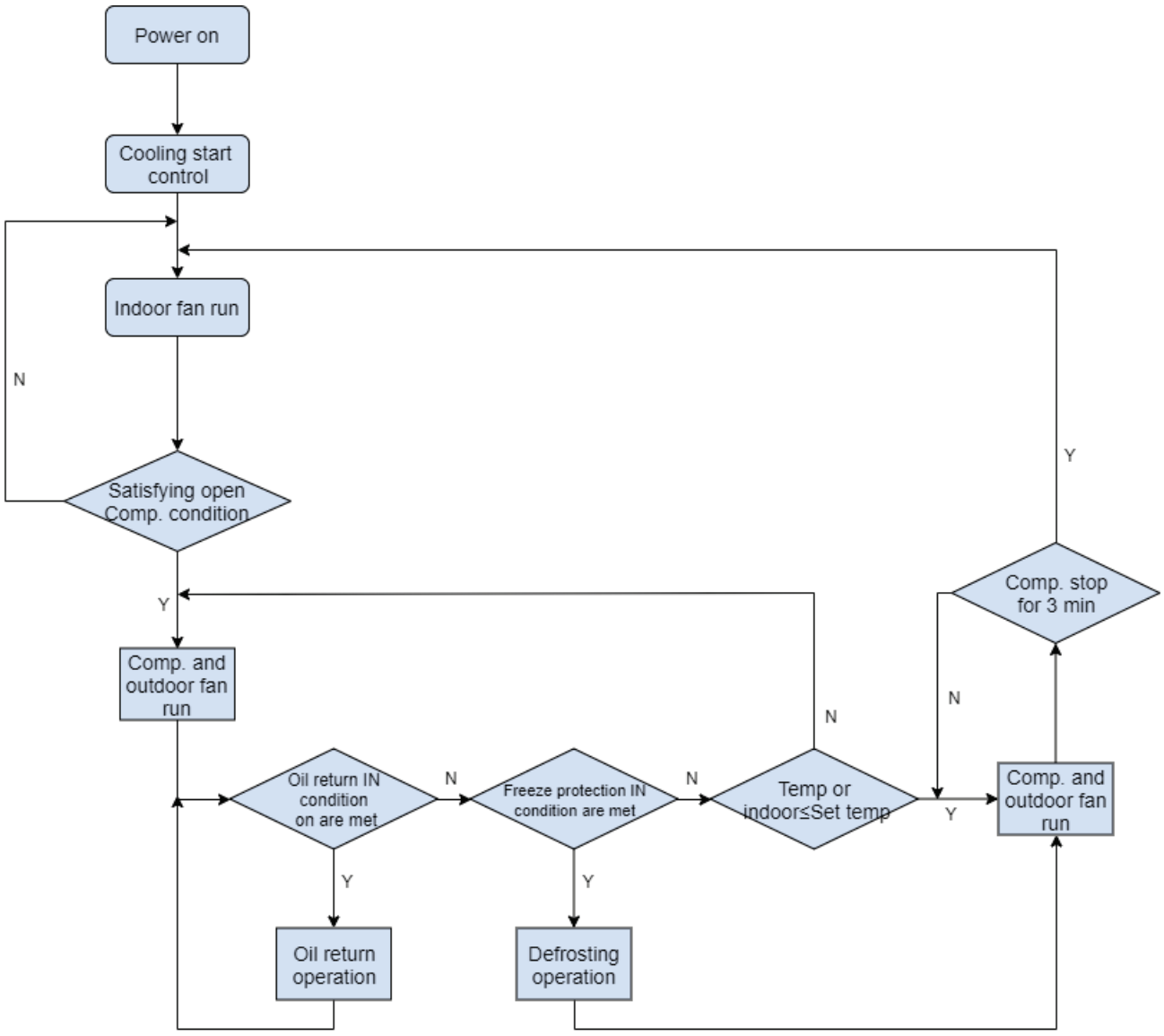

Note: The cassette and floor ceiling type indoor fan run after outdoor fan.

2.1.2 Heating Mode

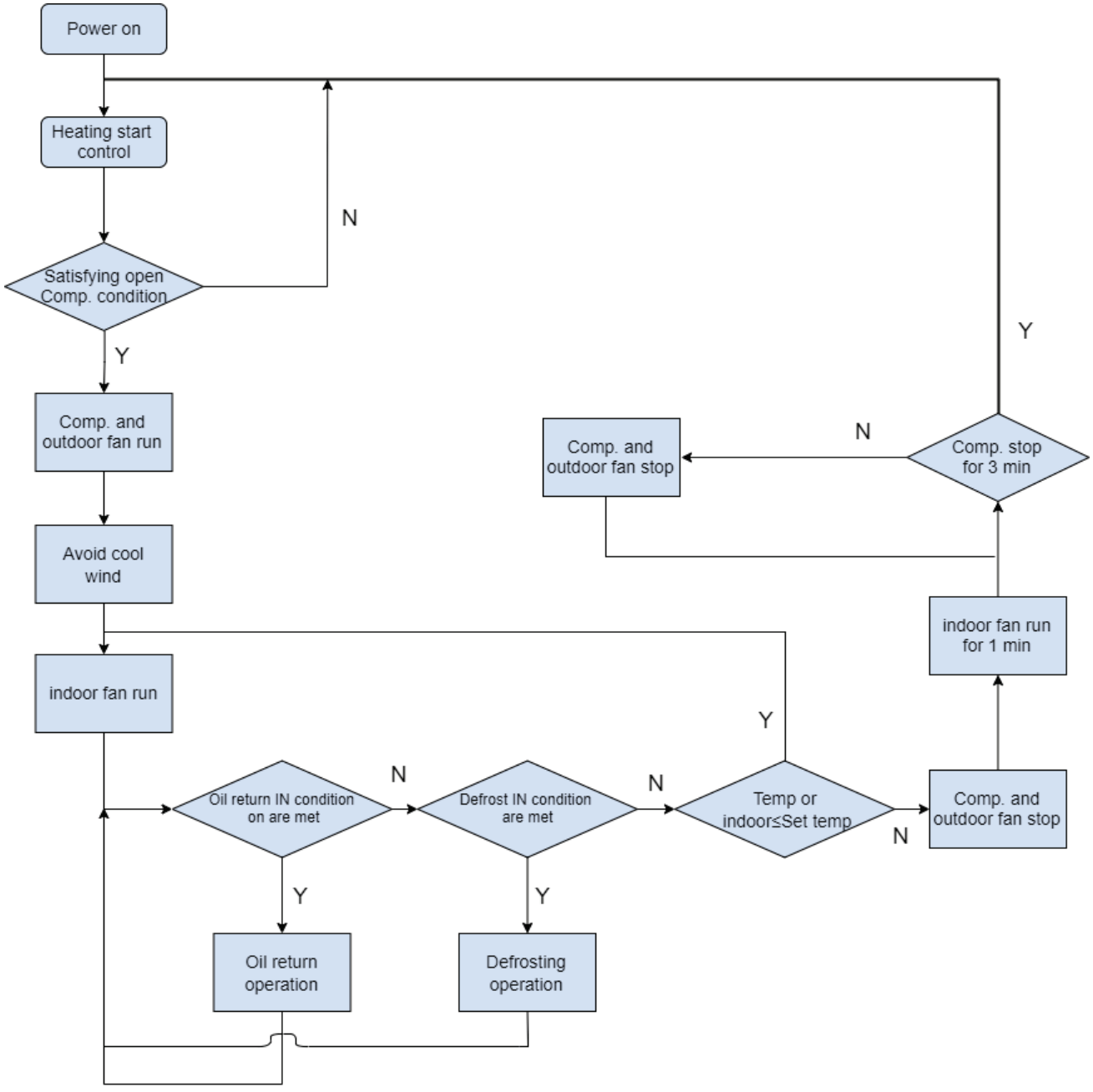

2.2 Control Mode

2.2.1 Based Control

2.2.1.1 Compressor Control

When cooling or heating mode is turned on, indoor fan will run for a while before the compressor starts. Under different modes, the compressor can only be stopped after running for some time (special cases excluded). This is to protect the compressor from frequent start or stop. Once the compressor is

stopped, it must not be restarted right away. Please wait for a few minutes.

2.2.1.2 EXV Control

When the unit is first started, the electronic expansion valve will reset control. During the process, the expansion valve will produce rattling sound. When cooling or heating mode is turned on, the valve will be open at a certain step before the compressor starts.

2.2.1.3 Outdoor Fan Control

This series air conditioner has two types of outdoor units: one with a single fan and the other with double fans. The outdoor fan can run at the highest level 15 and the lowest level 1. By controlling the speed of outdoor fan, the unit can achieve cooling at low temperature and heating at high temperature. In fan mode, outdoor fan will not work.

2.2.1.4 4-way Valve Control

After heating mode is turned on for a while, 4-way valve will be energized to change the direction of refrigerant flow so that the system can run in heating and the indoor unit will not blow cold air. Under other modes, the valve will not be energized.

To avoid the 4-way valve from incorrectly changing directions, when the unit stops in heating, due to a temperature point or other protection reasons, the 4-way valve will continue to function temporarily and lose power after a while.

There must be adequate differential pressure for the 4-way valve to change directions.

2.2.2 Special Control

2.2.2.1 Defrosting Control

ODU defrosting control in heating: Defrosting will start when the temperature sensed by outdoor tube temperature sensor reaches a preset value. During defrosting, the 4-way valve will switch to the cooling condition, and outdoor and indoor fans will both stop. When the temperature sensed by outdoor tube temperature sensor reaches the preset value of defrosting stop, system will quit defrosting. The 4-way valve will switch back to the heating condition, outdoor fan will start working first and indoor fan will resume its previous fan speed after performing cold air prevention.

2.2.2.2 Oil Return Control

If the unit is running at low frequency for a long time, system will enable oil return control. This is to lead oil in the pipeline back to the compressor so that the compressor will not be lack of oil. Generally, the

oil return takes about 5min. The compressor running frequency will be raised to the preset oil return frequency.

2.2.2.3 Refrigerant Recovery Control

Enabling method: Remote controller and wired controller both use the same enabling method. That is, within 5min after power is connected, start cooling mode (turn on the unit) and set temperature at 16℃, then press "＋, －, ＋, －, ＋, －" (6 times of pressing) in 5s to enter the refrigerant recovery mode. If it is successfully enabled, the indoor unit will display the corresponding code Fo.

After the refrigerant recovery mode is enabled, if remote controller or wired controller sends a signal or the refrigerant recovery mode has been enabled for 10min, system will exit from refrigerant recovery. If outdoor unit is shut down because of malfunction, refrigerant recovery will be stopped immediately.

Please note that refrigerant recovery mode cannot be enabled under the following conditions:

1. If temperature is shielded remotely, refrigerant recovery mode cannot be enabled. You need to first unlock the remote shield against temperature.

2. If temperature is higher than 16 degrees under energy-saving mode, refrigerant recovery mode cannot be enabled. You need to first turn off the energy-saving mode.

2.2.2.4 Forced Operation Control

This control is used to quickly check whether the unit can operate normally after installation. Wired controller has to be used to enable this control. For cassette type unit, you can enable the control through the light board.

Enabling method through the light board of cassette type unit: After the unit is installed and connected to power, press TEST button on the light board to enter forced operation mode. Short-press TEST button (less than 2s), cooling mode will be activated. Long-press TEST button (more than 2s), heating mode will be activated.

Enabling method through wired controller:

Under power-on status,

Forced cooling: press the "－" button continuously for 5s to enter the forced test mode.

Forced heating: press the "＋" button continuously for 5s to enter the forced test mode.

During test mode, press any button to quit the test mode.

Note: Forced test mode can only be enabled when the unit is first turned on and not yet receives any remote controller signal or button control signal.

2.2.3 Protection Control

2.2.3.1 High Pressure Protection Control (Only for 36k÷60k units)

System will enable high pressure protection control if the high pressure switch is detected open for continuously a little time. Under high pressure protection, system will be shut down and display error code E1.

When high pressure protection occurs for the first time, system will restore operation if the high pressure switch is detected to be reclosed for continuously a little time. When high pressure protection occurs for the second time in a certain time period, system will not restore operation. You need to manually turn off the unit and clear the error before restarting up the unit. (If high pressure protection occurs frequently, please send for professional personnel to repair.)

2.2.3.2 Low Pressure Protection Control (Only for 36k÷60k units)

System will enable low pressure protection control if the low pressure switch is detected open for continuously a little time. Under low pressure protection, system will be shut down and display error code E3. When low pressure protection occurs, system will restore operation if the low pressure switch is detected to be reclosed within a few minutes after shutdown. If low pressure protection occurs for several times in a period of time, system will not restore operation automatically. You need to manually turn off the unit before restarting up the unit.

2.2.3.3 High Temperature Prevention Control

Under heating mode, system will enable high temperature prevention control if the temperature sensed by indoor tube temperature sensor reaches a certain value. When high temperature prevention control is enabled, outdoor fan will slow down.

2.2.3.4 Overload protection function

Overload protection function in cooling and dehumidification mode. Motor overload protection and overcurrent protection Overload protection: When the motor's load exceeds the motor's capacity, the temperature increases, and the motor current exceeds the rated value. The value of overload protection is far below the value of overcurrent protection, but it prevents the device overload than the normal load.

2.3 Functions

2.3.1 Setting of Filter Cleaning Reminder

Turn on Filter Clean Reminder Function: When unit is on, press “FUNCTION” button and select Filter Clean Reminder. “” icon will blink. Press “＋” or “－” button to adjust the cleaning level, of which the range is 00, 10-39. Press “ENTER” to turn on this function.

Turn off Filter Clean Reminder Function: When unit is on and this function has been turned on, press “FUNCTION” button and select Clean. Then “” icon will blink. Set the cleaning level as 00 and press “ENTER” function to cancel this setting.

When Filter Clean Reminder time is up, “” icon will light up to remind you to clean the filter. There are two ways to cancel filter clean reminding:

(1) Press “” button twice within one second to cancel reminding and it will retime according to the original cleaning level.

(2) Press “FUNCTION” button to turn to Filter Clean Reminder Function, then press “ENTER” to cancel reminding, and it will retime according to the original cleaning level. The clean reminding can be cancel only when you didn’t reset the cleaning level under the setting of Filter Clean Reminder Function.

Cleaning Level	Accumulated Operating Time (hour)	Cleaning Level	Accumulated Operating Time (hour)	Cleaning Level	Accumulated Operating Time (hour)
10	5500	20	1400	30	100
11	6000	21	1800	31	200
12	6500	22	2200	32	300
13	7000	23	2600	33	400
14	7500	24	3000	34	500
15	8000	25	3400	35	600
16	8500	26	3800	36	700
17	9000	27	4200	37	800
18	9500	28	4600	38	900
19	10000	29	5000	39	1000

2.3.2 Low-temperature Drying Function

Under dry mode, when the setting temperature is 16℃, press “－” button for twice, the setting temperature becomes 12℃, then the unit enters into low-temperature dry function.

When low-temperature dry function is turned on, directly press "＋" button or switch the mode can quit the function.

2.3.3 Child-lock Function

Without error, under ON or OFF status of unit, press "＋" and "－" buttons simultaneously for 5 seconds can enter into child-lock function, the liquid crystal screen will display "🔒"; Press "＋" and "－" buttons simultaneously again for 5 seconds can quit the child-lock function.

Under child-lock status, no response for pressing any buttons. The unit will memorize the child-lock status after power failure and re-energizing the unit.

2.3.4 Memory Function

(1) Under ON or OFF status, long press "FUNCTION" button for 5s and the temperature zone displays "C00"; then press "MODE" button three times quickly;

(2) Long press "FUNCTION" button for another 5s to enter the interface of setting wired controller parameters. "P00" is displayed in temperature zone;

(3) Press "＋" or "－" button to select parameter code to "P15". Press "MODE" button to enter parameter setting. At that time, parameter value is blinking. Press "＋" or "－" button to adjust the parameter value and press "ENTER" button to finish setting. When the parameter value is "01", memory function is set. When the parameter value is "00", memory function is not set. The default value of parameter is "01".

If memory function has not been set, when the unit is re-energized after power failure, the unit is power-off status. If the memory function is set in wired controller, when the wired controller is re-energized after power failure, it will resume to the operating status before power failure.

2.3.5 Switch between Fahrenheit(℉) and Degree Celsius(℃)

(1) Under ON or OFF status, Long press "FUNCTION" button for 5s and the temperature zone displays "C00"; then press "MODE" button three times in one second;

(2) Long press "FUNCTION" button for another 5s to enter the interface of setting wired controller parameters. "P00" is displayed in temperature zone;

(3) Press "＋" or "－" button to select parameter code to "P16". Press "MODE" button to enter parameter setting. At that time, parameter value is blinking at time displaying zone. Press "＋" or

"－" button to adjust the parameter value and press "ENTER" button to finish setting. When the parameter value is "01", the unit is Fahrenheit. When the parameter value is "00", the unit is Celsius. The default value of parameter is "00".

2.3.6 Inquiry of Ambient Temperature

Under power-off or power-on status, press and hold "ENTER" button for 5 seconds, and the wired controller will display the indoor temperature for 5 seconds. Within the 5 seconds, it can quit displaying the indoor temperature immediately and be responded to the instructions as usual after pressing any buttons.

2.3.7 Inquiry of Historical Malfunction

Under ON or OFF status, Long press "FUNCTION" button for 5s and the temperature zone displays "C00"; then press "MODE" button three times in one second. Then:

(1) Inquiry of historical malfunction of indoor unit: press "＋" or "－" button to select parameter code "C05". Press "MODE" button to enter the interface of viewing historical malfunction of indoor unit. If there are several indoor units in network, press "＋" or "－" button and press "MODE" button to select the indoor unit. Press "＋" or "－" button to view the 5 malfunctions happened recently. The specific error code will blink at temperature displaying zone. The 5th displayed malfunction is the last malfunction.

(2) Inquiry of historical malfunction of outdoor unit: press "＋" or "－" button to select parameter code "n6". Press "MODE" button to enter the interface of viewing historical malfunction of outdoor unit. If there are several indoor units in network, press "＋" or "－" button and press "MODE" button to select the indoor unit. Press "＋" or "－" button to view the 5 malfunctions happened recently. The specific error code will blink at temperature displaying zone. The 5th displayed malfunction is the last malfunction.

2.3.8 Setting ambient temperature sensor (dual ambient temperature sensors function)

(1) Under ON or OFF status, Long press "FUNCTION" button for 5s and the temperature zone displays "C00"; then press "MODE" button three times in one second;

(2) Long press "FUNCTION" button for another 5s to enter the interface of setting wired controller

parameters. “P00” is displayed in temperature zone;

(3) Press “＋” or “－” button to select parameter code to “P20”. Press “MODE” button to enter parameter setting. At that time, parameter value is blinking at time displaying zone. Press “＋” or “－” button to adjust the parameter value and press “ENTER” button to finish setting. There are 3 selections:

1) When the parameter value is “01”, the ambient temperature at air return is set as indoor ambient temperature.
2) When the parameter value is “02”, the temperature at wired controller is set as indoor ambient temperature.
3) When the parameter value is “03”, select the temperature sensor at air return in cooling, dry and fan mode; select the temperature sensor at wired controller in heating mode.

2.3.9 Selecting compensation of temperature sensor

(1) Under ON or OFF status, Long press “FUNCTION” button for 5s and the temperature zone displays “C00”; then press “MODE” button three times in one second;

(2) Long press “FUNCTION” button for another 5s to enter the interface of setting wired controller parameters. “P00” is displayed in temperature zone. Then:

1) Compensation of temperature sensor in cooling, dry and fan mode: press “＋” or “－” button to select parameter code to “P21”. Press “MODE” button to enter parameter setting. At that time, parameter value is blinking at time displaying zone. Press “＋” or “－” button to adjust the parameter value and press “ENTER” button to finish setting. The compensation value setting range is -15 to 15.
2) Compensation of temperature sensor in heating mode: press “＋” or “－” button to select parameter code to “P22”. Press “MODE” button to enter parameter setting. At that time, parameter value is blinking at time displaying zone. Press “＋” or “－” button to adjust the parameter value and press “ENTER” button to finish setting. The compensation value setting range is -15 to 15.

2.3.10 Selecting fan mode of indoor fan motor

(1) Under ON or OFF status, Long press “FUNCTION” button for 5s and the temperature zone displays “C00”; then press “MODE” button three times in one second;

(2) Long press “FUNCTION” button for another 5s to enter the interface of setting wired controller parameters. “P00” is displayed in temperature zone;

(3) Press “＋” or “－” button to select parameter code to “P30”. Press “MODE” button to enter

parameter setting. At that time, parameter value is blinking at time displaying zone. Press "＋" or "－" button to adjust the parameter value and press "ENTER" button to finish setting. The parameter value setting range is 01 to 09.

There are 5 selections for high external pressure (ESP) duct:

(1) P3 (LCD displays 03).

(2) P4 (LCD displays 04).

(3) P5 (LCD displays 05).

(4) P6 (LCD displays 06).

(5) P7 (LCD displays 07).

Static pressure selection	Super high speed	High speed	Medium speed	Low speed
P3	S09	S08	S06	S04
P4	S10	S09	S07	S05
P5	S11	S10	S08	S06
P6	S12	S11	S09	S07
P7	S13	S12	S10	S08

Notes:

① The external static pressure (ESP) can be changed in 5 levels by the remote controller.

② The default ESP mode setting is P05 which is the rated ESP.

③ The remote controller can be used to change turbo, H, M and L.

There are 9 selections for high static pressure (ESP) duct:

(1) P1 (LCD displays 01).

(2) P2 (LCD displays 02).

(3) P3 (LCD displays 03).

(4) P4 (LCD displays 04).

(5) P5 (LCD displays 05).

(6) P6 (LCD displays 06).

(7) P7 (LCD displays 07).

(8) P8 (LCD displays 08).

(9) P9 (LCD displays 09).

Note: You can select P01, P02, P03, P04, P05, P06, P07, P08, P09 in fan mode of indoor fan motor, which means different fan mode combinations are corresponding to different static pressure. Ex-factory defaulted mode is P05. You can set the mode through wired controller. S01, S02, S03……S12, S13

means the rotation speed of indoor unit is from low to high.

Combination relationship of P01, P02, P03, P04, P05, P06, P07, P08, P09.

Static pressure selection	Super high speed	High speed	Medium speed	Low speed
P1	S05	S03	S02	S01
P2	S06	S04	S03	S02
P3	S07	S05	S04	S03
P4	S08	S06	S05	S04
P5	S09	S07	S06	S05
P6	S10	S08	S07	S06
P7	S11	S09	S08	S07
P8	S12	S10	S09	S08
P9	S13	S11	S10	S09

2.3.11 Setting of master and slave wired controller

(1) Under ON or OFF status, Long press “FUNCTION” button for 5s and the temperature zone displays “C00”; then press “MODE” button three times in one second;

(2) Long press “FUNCTION” button for another 5s to enter the interface of setting wired controller parameters. “P00” is displayed in temperature zone;

(3) Press “＋” or “－” button to select parameter code to “P13”. Press “MODE” button to enter parameter setting. At that time, parameter value is blinking at time displaying zone. Press “＋” or “－” button to adjust the parameter value and press “ENTER” button to finish setting. There are 2 selections:

1) When the parameter value is “01”, the wired controller is set as master wired controller.
2) When the parameter value is “02”, the wired controller is set as slave wired controller.

2.3.12 Debugging Function

(1) Under ON or OFF status, Long press “FUNCTION” button for 5s and the temperature zone displays “C00”; then press “MODE” button three times in one second;

(2) Long press “FUNCTION” button for another 5s to enter the interface of setting wired controller parameters. “P00” is displayed in temperature zone;

(3) Press “＋” or “－” button to select parameter code to “P09”. Press “MODE” button to go to debugging menu. At that time, the parameter code of setting item is blinking at temperature displaying zone. It indicates that the wired controller has entered debugging state. Press “＋” or “－” button to select the setting item and press “MODE” button to enter the setting interface of

selected item.

2.3.12.1 Setting low pressure protection function

Under debugging state, press “＋” or “－” button to select parameter code to “00” in temperature displaying zone. Timer zone displays setting state and press “＋” or “－” button to adjust. There are 2 selections:

(1) Without low pressure protection function (LCD displays 00).

(2) With low pressure protection function (LCD displays 01).

Press “ENTER” button to finish setting.

2.3.12.2 Setting refrigerant lacking protection function

Under debugging state, press “＋” or “－” button to select parameter code to “01” in temperature displaying zone. Timer zone displays setting state and press “＋” or “－” button to adjust. There are 2 selections:

(1) Without refrigerant lacking protection function (LCD displays 00).

(2) With refrigerant lacking protection function (LCD displays 01).

Press “ENTER” button to finish setting.

2.3.12.3 Displaying setting of freeze protection error code

Under debugging state, press “＋” or “－” button to select parameter code to “03” in temperature displaying zone. Timer zone displays setting state and press “＋” or “－” button to adjust. There are 2 selections:

(1) Displayed (LCD displays 00).

(2) Not Displayed (LCD displays 01).

Press “ENTER” button to finish setting.

2.3.12.4 Defrost mode selection

Under debugging state, press “＋” or “－” button to select parameter code to “06” in temperature displaying zone. Timer zone displays setting state and press “＋” or “－” button to adjust. There are 2 selections:

(1) Defrost mode 1 (LCD displays 00).

(2) Defrost mode 2 (LCD displays 01).

Press “ENTER” button to finish setting.

2.3.12.5 Heat pump unit and cooling only unit selection

Under debugging state, press “＋” or “－” button to select parameter code to “07” in temperature displaying zone. Timer zone displays setting state and press “＋” or “－” button to adjust. There are 2 selections:

(1) Heat pump type unit (LCD displays 00).

(2) Cooling only unit (LCD displays 01).

Press “ENTER” button to finish setting.

2.3.12.6 Selecting blowing residual heating of indoor unit

Under debugging state, press “＋” or “－” button to select parameter code to “08” in temperature displaying zone. Timer zone displays setting state and press “＋” or “－” button to adjust. There are 2 selections:

Mode 1 (LCD displays 00).

Mode 2 (LCD displays 01).

Press “ENTER” button to finish setting.

Note: Blowing residual heating of indoor unit.

Mode 1: Unit stops when reaching temperature point and indoor fan motor does not stop in cooling mode; After unit stops when reaching temperature point in heating mode, duct type unit and floor ceiling unit blow residual heat for 60s and then stop indoor unit, while cassette type unit always operates in low fan speed and blows residual heat for 60s when there is malfunction. After the residual heat blowing from the fan stops, if the start-up condition is not met within 15 minutes, the indoor unit fan starts to run the 60S in low fan speed, if the start-up condition is met in this process, it will immediately enter the heating mode; if the test results still do not meet the start-up conditions, then after blowing for 60s, start timing for 15 minutes and cycle this process.

Mode 2: After unit stops when reaching temperature point, the indoor fan motor stops operation with a 10s-delay no matter in cooling mode or in heating mode.

2.3.13 Connect to Interface of Centralized Controller

The indoor unit is with the interface of centralized controller. When centralized controller is connected, centralized controller of unit can be realized when the wired controller is not connected.

(1) Interface instruction:

1) The printing of interface on the indoor unit PCB is COM_BMS, before connecting the

centralized controller, a gateway model SMG-01 is required. The following figure shows an example.

2) Electrical characteristic: none.

3) Working principle: centralized controller the communication of indoor mainboard and realize the unit control.

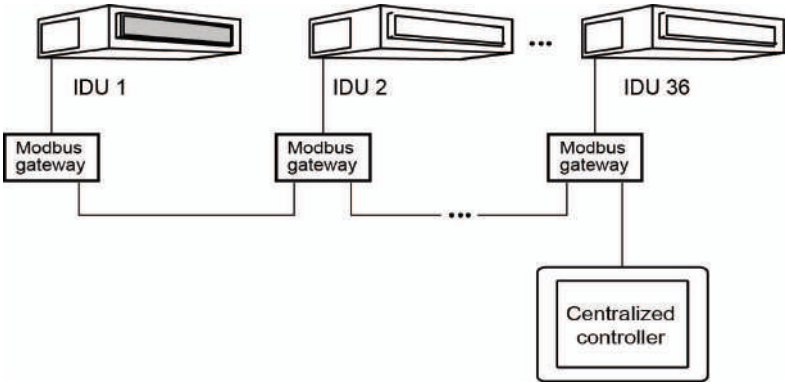

(2) Function instructions:

In order to achieve this function, set the address through wired controller. Please refer to Point 3 for the setting method.

When the centralized controller is connected, centralized controller of the unit can be realized to control unit ON/OFF, operation mode, set fan speed/temperature and weekly timer.

(3) The setting range of indoor unit address is 1-36, and the address shall not be identical, otherwise, communication error might occur. The address seting is as follows:

Under startup/shutdown interface, long press “FUNCTION” button for 5 seconds and it displays “C00”, short press “MODE” button 3 times (the press interval is within 1 second; when pressing the “MODE” button, it will display invalid operation in the first two times and give reaction in the third time), then continue to long press the “FUNCTION” button for 5 seconds to enter parameter setting interface, and it will display “P00”. Press “+” or “-” button to select the parameter code P42, short press “MODE” button, when the wired controller is controlling one indoor unit, it will enter the setting menu immediately; when the wired controller is controlling multiple indoor units, enter the selection menu of indoor unit to press “+” or “-” button to switch the number of indoor unit, the timer area will display the address number of indoor unit and the temperature area will display the number of indoor unit acquiescently. Short press “MODE” button to enter the setting menu, in the timer area, the number displaying the indoor unit address will blink, press “+” or “-” button to adjust the address number of indoor unit, short press “ENTER” button to confirm the setting and return to the previous status. Press “⏻” button to exit

the setting after completion and return to the homepage.

When the address is set, the wired controller can be removed and connect the centralized controller to the indoor mainboard. Then connect the required units to realize centralized control of these units.

Notes:

① The unit addresses in the same network must be different, otherwise, communication malfunction will occur and the unit can not work normally.

② When centralized controller is to be connected, the unit address range is 1-36. Only 36 sets of unit in maximum can be connected.

③ The code and model of centralized controller is as below:

Name	Remark
Centralized controller SCC-36	Only 36 sets of unit in maximum can be connected to this controller

2.3.14 Connect to Interface of the MODBUS

The indoor unit of this series has MODBUS interface. If the user needs to connect the unit to the management system of the building, please enquire Sinclair for the MODBUS protocol.

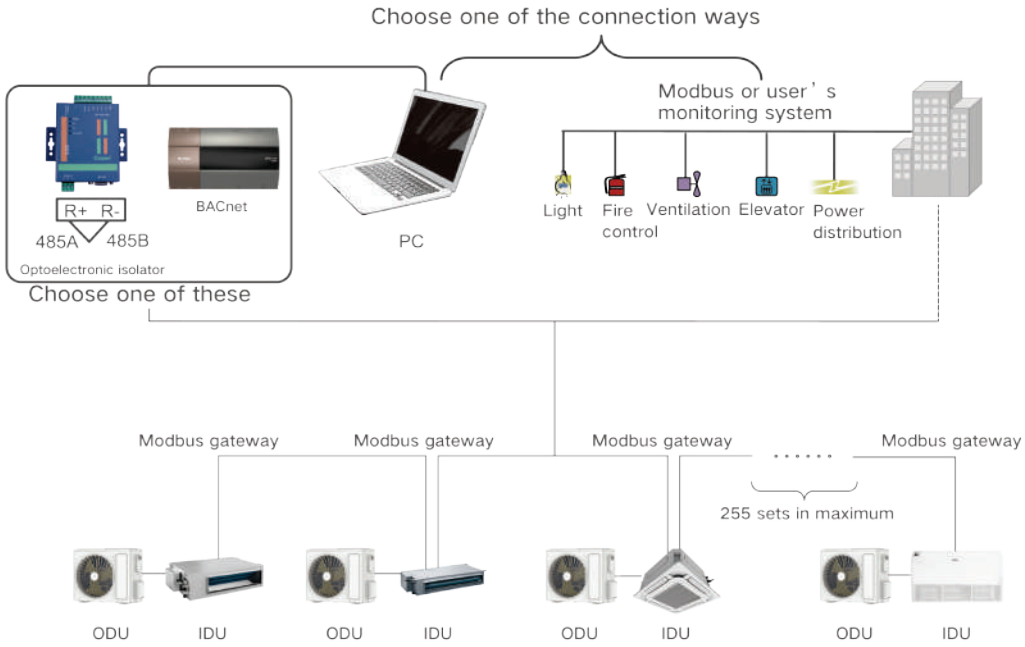

(1) Interface instruction:

1) The Unit needs to be connected to the gateway SMG-01, its printing is COM_BMS and interface type is B6B-XH-K3.

2) Electrical characteristic: baud rate: 9600bps; standard: RS485;

3) Working principle:

The indoor mainboard can send out the unit operation state through this interface and receive logical control information to realize control and monitor of the unit.

(2) Function instructions:

In order to achieve this function, set the address through wired controller.

The setting range of indoor unit address is 1-255, and the address shall not be identical, otherwise, communication error might occur. The address setting is as follows:

Under startup/shutdown interface, long press “FUNCTION” button for 5 seconds and it displays “C00”, short press “MODE” button 3 times (the press interval is within 1 second; when pressing the “MODE” button, it will display invalid operation in the first two times and give reaction in the third time), then continue to long press the “FUNCTION” button for 5 seconds to enter parameter setting interface, and it will display “P00”. Press “+” or “-” button to select the parameter code P42, short press “MODE” button, when the wired controller is controlling one indoor unit, it will enter the setting menu immediately; when the wired controller is controlling multiple indoor units, enter the selection menu of indoor unit to press “+” or “-” button to switch the number of indoor unit, the timer area will display the address number of indoor unit and the temperature area will display the number of indoor unit acquiescently. Short press “MODE” button to enter the setting menu, in the timer area, the number displaying the indoor unit address will blink, press “+” or “-” button to adjust the address number of indoor unit, short press “ENTER” button to confirm the setting and return to the previous status. Press “⏻” button to exit the setting after completion and return to the homepage.

Notes:

① The unit can not be connected to MODBUS and centralized controller at the same time; Only one of them can be selected.

② 255 sets of unit in maximum can be connected in the same network; The unit addresses in the same network must be different, otherwise, the unit control will be affected.

③ Perform wiring when the unit power is cut off.

④ MODBUS Gateway (SMG-01) that need to purchase separately if the indoor unit does not have an interface of MODBUS Gateway. Please consult the manufacturer's technician before ordering.

3. Troubleshooting

3.1 Wiring Diagrams

The following electric diagram is for reference only. Please refer to diagram sticked on the unit as the latest version.

3.1.1 Wiring Diagrams of ODUs

Model: ASGE-12BI2

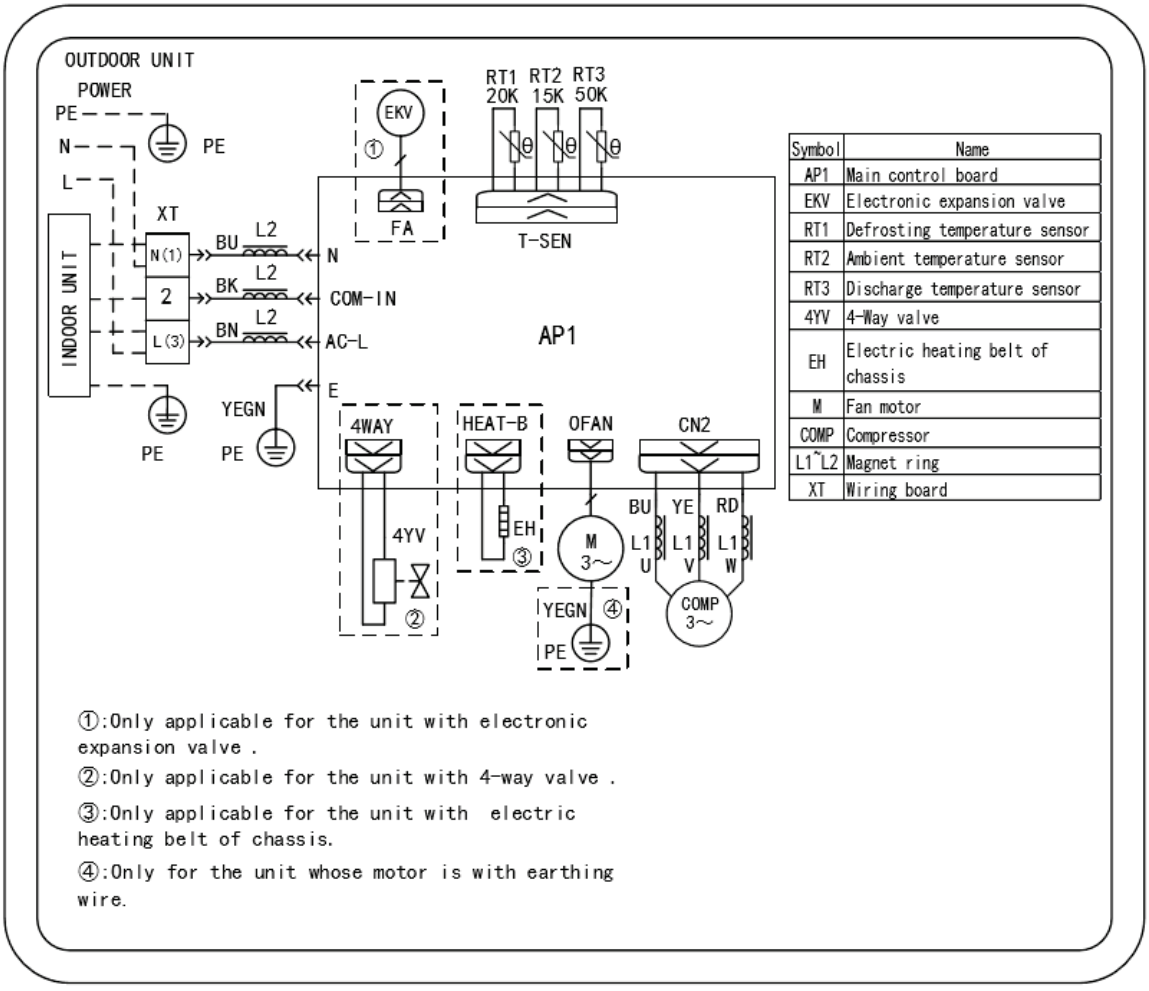

Symbol	Name
AP1	Main control board
EKV	Electronic expansion valve
RT1	Defrosting temperature sensor
RT2	Ambient temperature sensor
RT3	Discharge temperature sensor
4YV	4-Way valve
EH	Electric heating belt of chassis
M	Fan motor
COMP	Compressor
L1~L2	Magnet ring
XT	Wiring board

Model: ASGE-18BI2, ASGE-24BI2

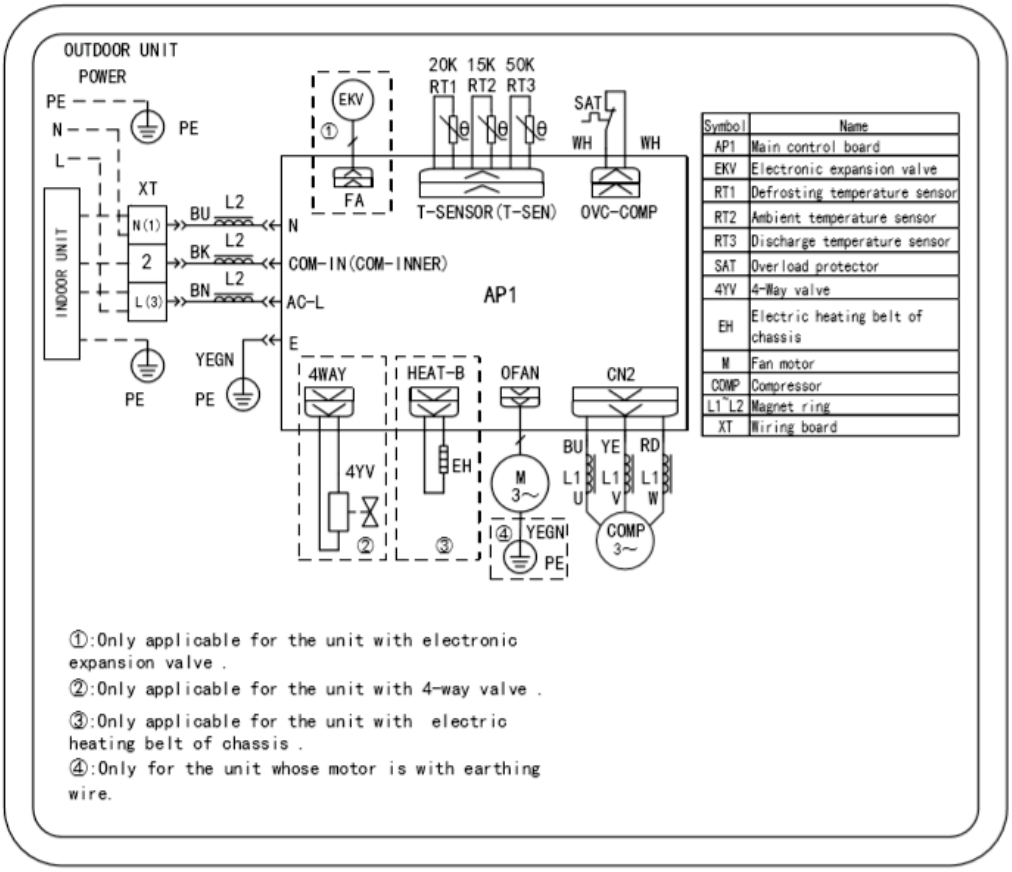

Symbol	Name
AP1	Main control board
EKV	Electronic expansion valve
RT1	Defrosting temperature sensor
RT2	Ambient temperature sensor
RT3	Discharge temperature sensor
SAT	Overload protector
4YV	4-Way valve
EH	Electric heating belt of chassis
M	Fan motor
COMP	Compressor
L1~L2	Magnet ring
XT	Wiring board

Model: ASGE-30BI2

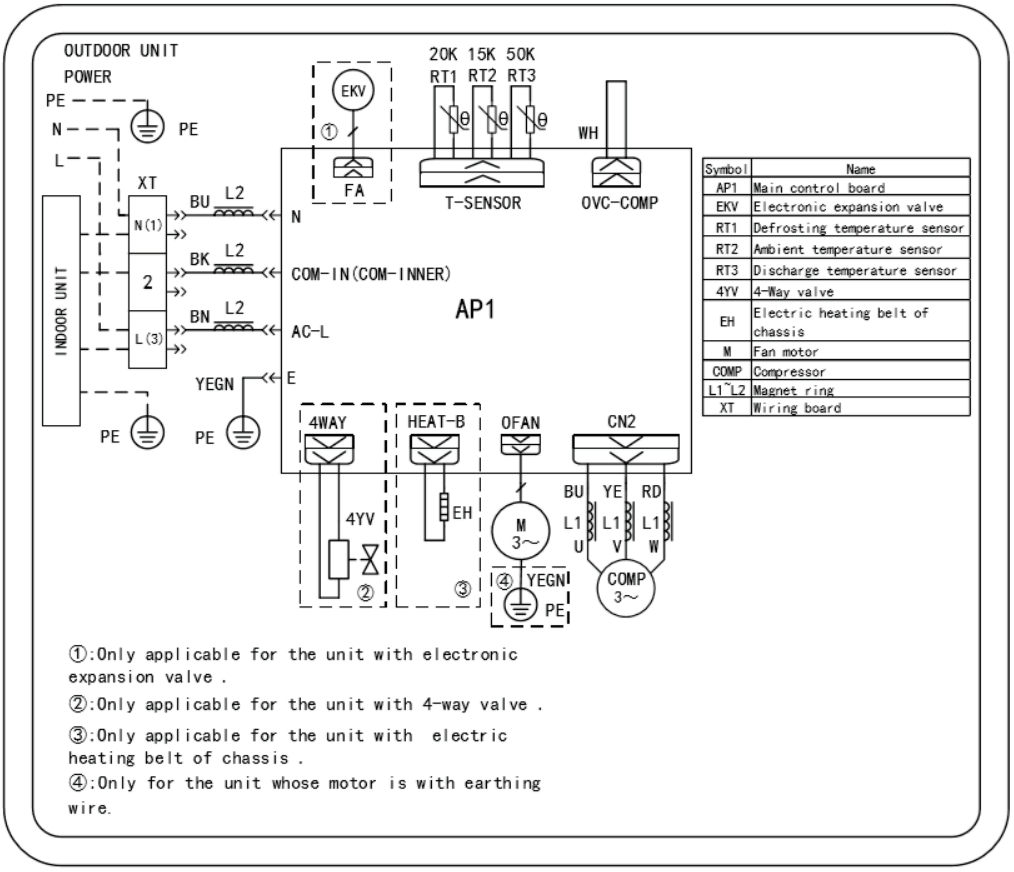

Symbol	Name
AP1	Main control board
EKV	Electronic expansion valve
RT1	Defrosting temperature sensor
RT2	Ambient temperature sensor
RT3	Discharge temperature sensor
4YV	4-Way valve
EH	Electric heating belt of chassis
M	Fan motor
COMP	Compressor
L1~L2	Magnet ring
XT	Wiring board

Model: ASGE-36BI2, ASGE-42BI2

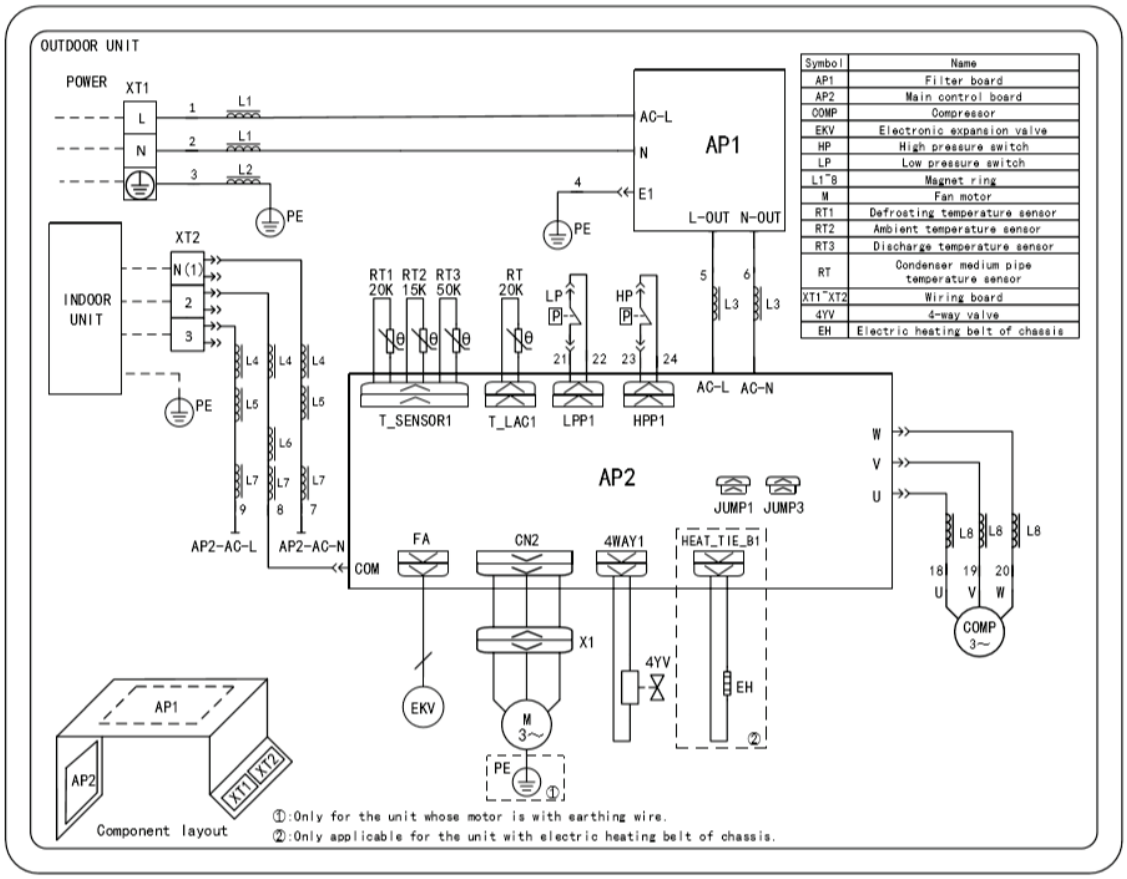

Symbol	Name
AP1	Filter board
AP2	Main control board
COMP	Compressor
EKV	Electronic expansion valve
HP	High pressure switch
LP	Low pressure switch
L1~8	Magnet ring
M	Fan motor
RT1	Defrosting temperature sensor
RT2	Ambient temperature sensor
RT3	Discharge temperature sensor
RT	Condenser medium pipe temperature sensor
XT1~XT2	Wiring board
4YV	4-way valve
EH	Electric heating belt of chassis

Model: ASGE-48BI2

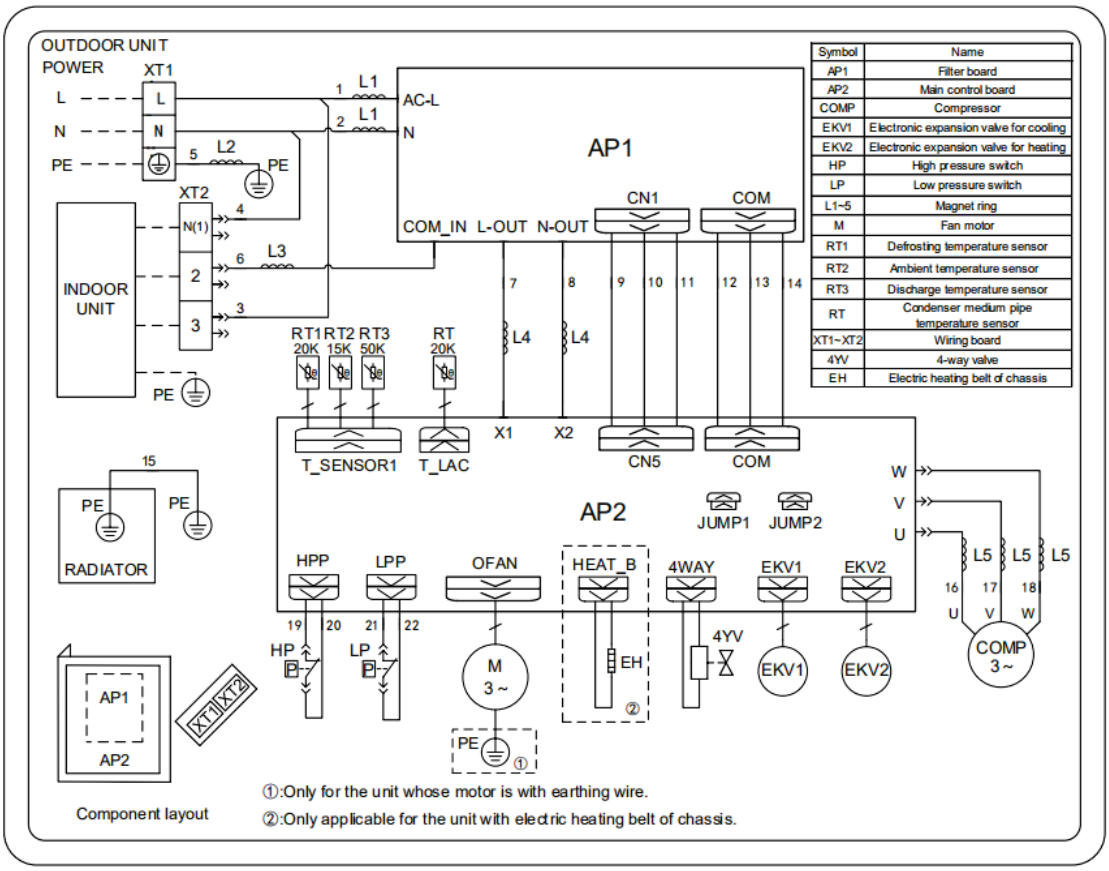

Symbol	Name
AP1	Filter board
AP2	Main control board
COMP	Compressor
EKV1	Electronic expansion valve for cooling
EKV2	Electronic expansion valve for heating
HP	High pressure switch
LP	Low pressure switch
L1~5	Magnet ring
M	Fan motor
RT1	Defrosting temperature sensor
RT2	Ambient temperature sensor
RT3	Discharge temperature sensor
RT	Condenser medium pipe temperature sensor
XT1~XT2	Wiring board
4YV	4-way valve
EH	Electric heating belt of chassis

Model: ASGE-36BI2-3, ASGE-42BI2-3

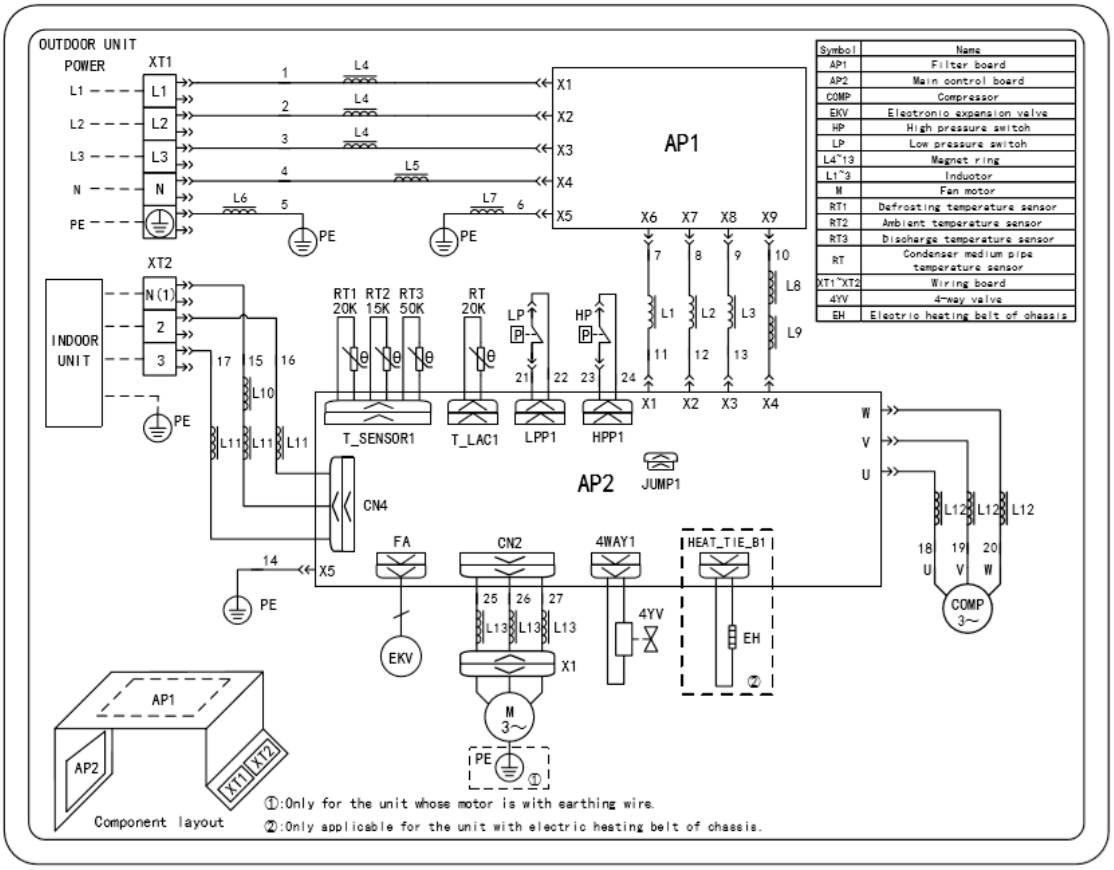

Symbol	Name
AP1	Filter board
AP2	Main control board
COMP	Compressor
EKV	Electronic expansion valve
HP	High pressure switch
LP	Low pressure switch
L4~13	Magnet ring
L1~3	Inductor
M	Fan motor
RT1	Defrosting temperature sensor
RT2	Ambient temperature sensor
RT3	Discharge temperature sensor
RT	Condenser medium pipe temperature sensor
XT1~XT2	Wiring board
4YV	4-way valve
EH	Electric heating belt of chassis

Model: ASGE-48BI2-3

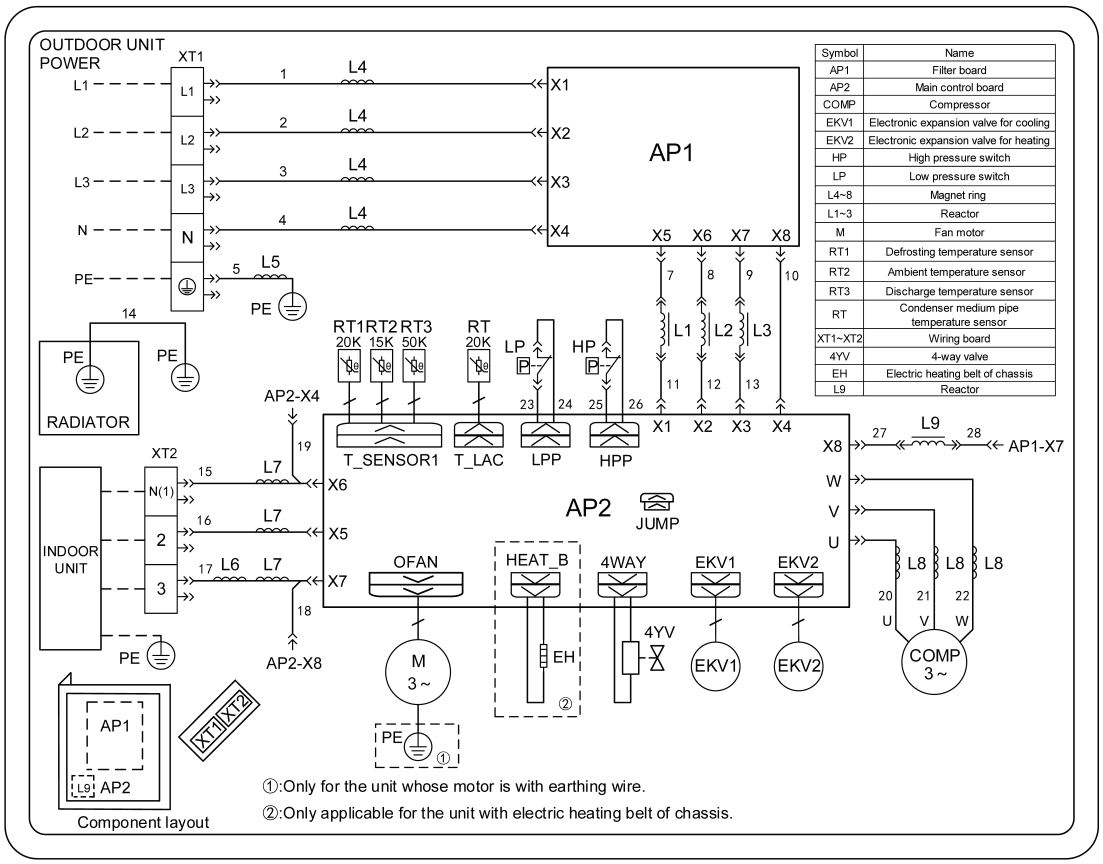

Symbol	Name
AP1	Filter board
AP2	Main control board
COMP	Compressor
EKV1	Electronic expansion valve for cooling
EKV2	Electronic expansion valve for heating
HP	High pressure switch
LP	Low pressure switch
L4~8	Magnet ring
L1~3	Reactor
M	Fan motor
RT1	Defrosting temperature sensor
RT2	Ambient temperature sensor
RT3	Discharge temperature sensor
RT	Condenser medium pipe temperature sensor
XT1~XT2	Wiring board
4YV	4-way valve
EH	Electric heating belt of chassis
L9	Reactor

Model: ASGE-60BI2-3

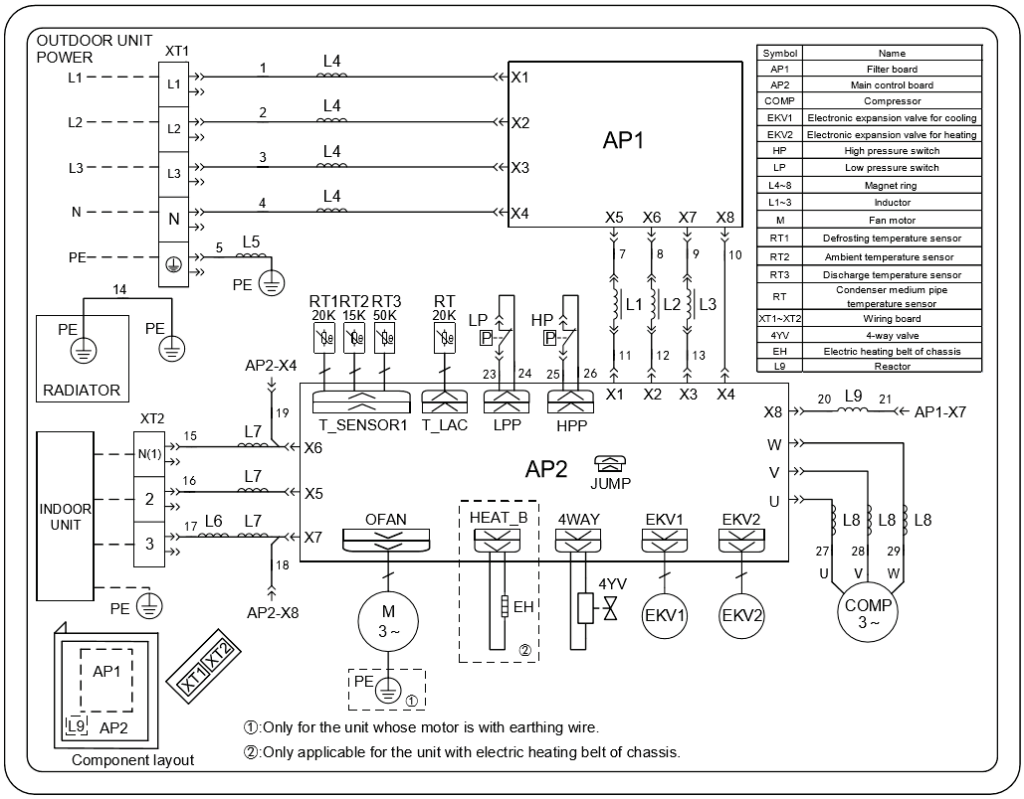

Symbol	Name
AP1	Filter board
AP2	Main control board
COMP	Compressor
EKV1	Electronic expansion valve for cooling
EKV2	Electronic expansion valve for heating
HP	High pressure switch
LP	Low pressure switch
L4~8	Magnet ring
L1~3	Inductor
M	Fan motor
RT1	Defrosting temperature sensor
RT2	Ambient temperature sensor
RT3	Discharge temperature sensor
RT	Condenser medium pipe temperature sensor
XT1~XT2	Wiring board
4YV	4-way valve
EH	Electric heating belt of chassis
L9	Reactor

3.1.2 Wiring Diagrams of IDUs

Cassette Type

Model: ASC-12BI2, ASC-18BI2

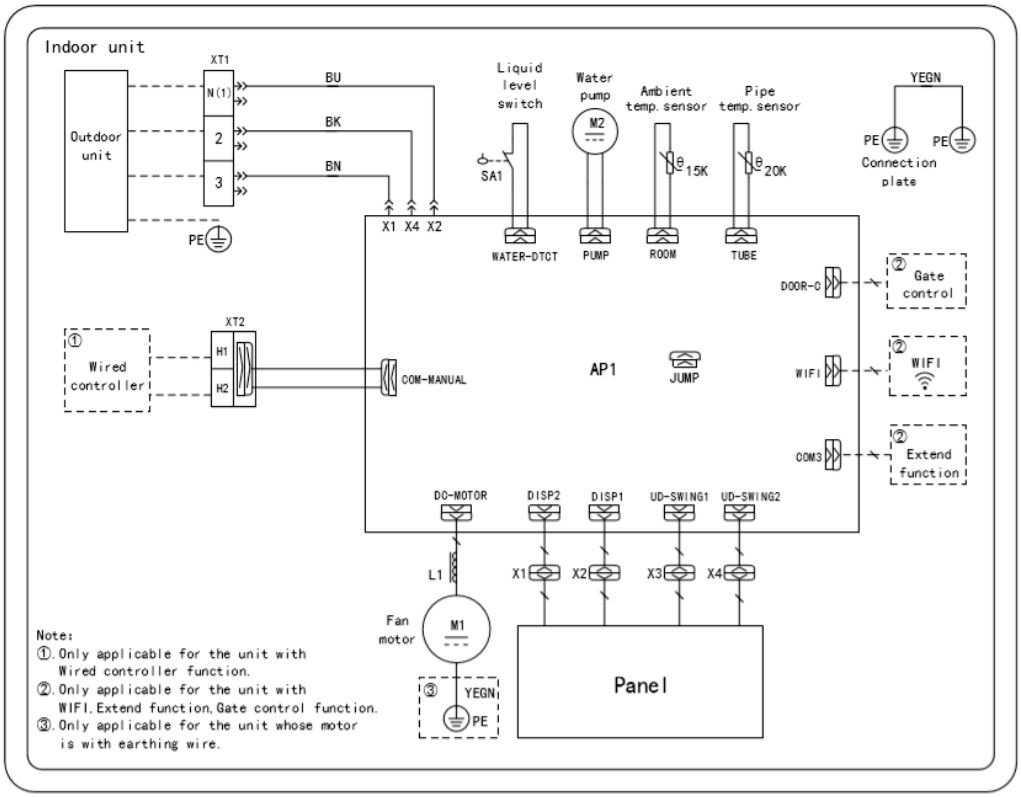

Model: ASC-24BI2, ASC-30BI2

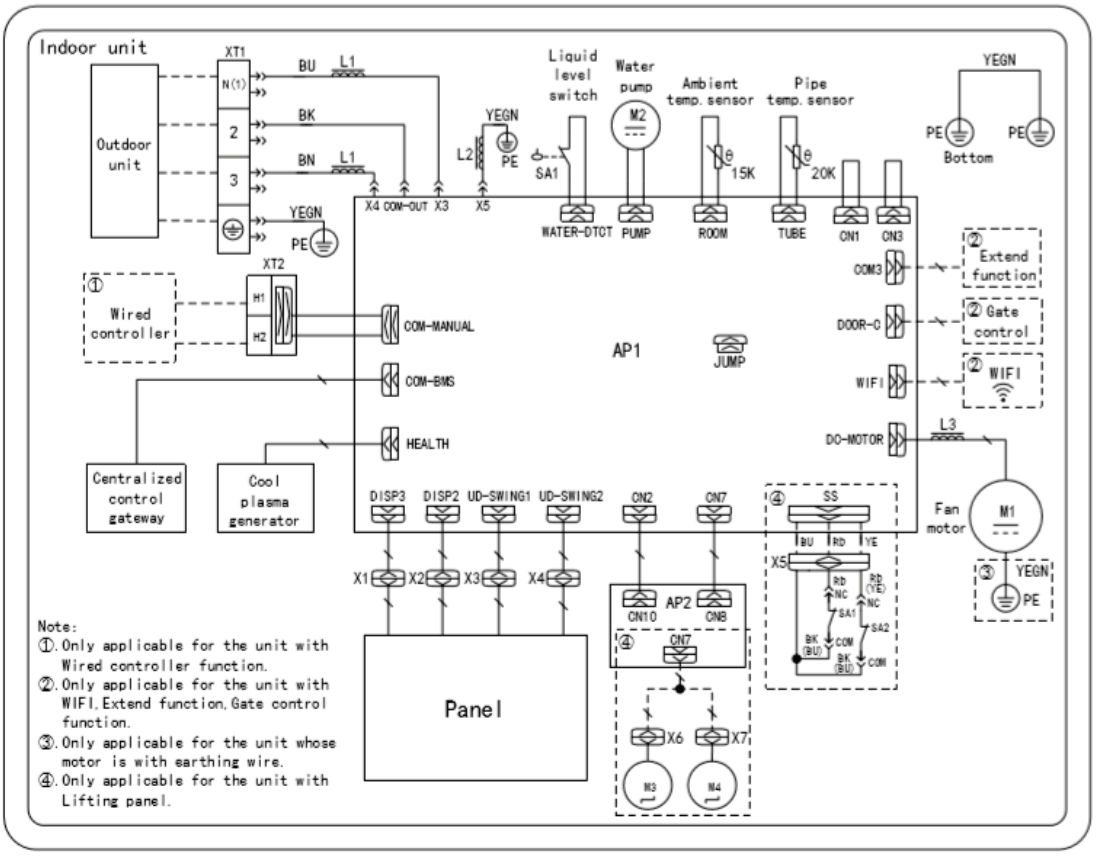

Model: ASC-36BI2, ASC-42BI2, ASC-48BI2, ASC-60BI2

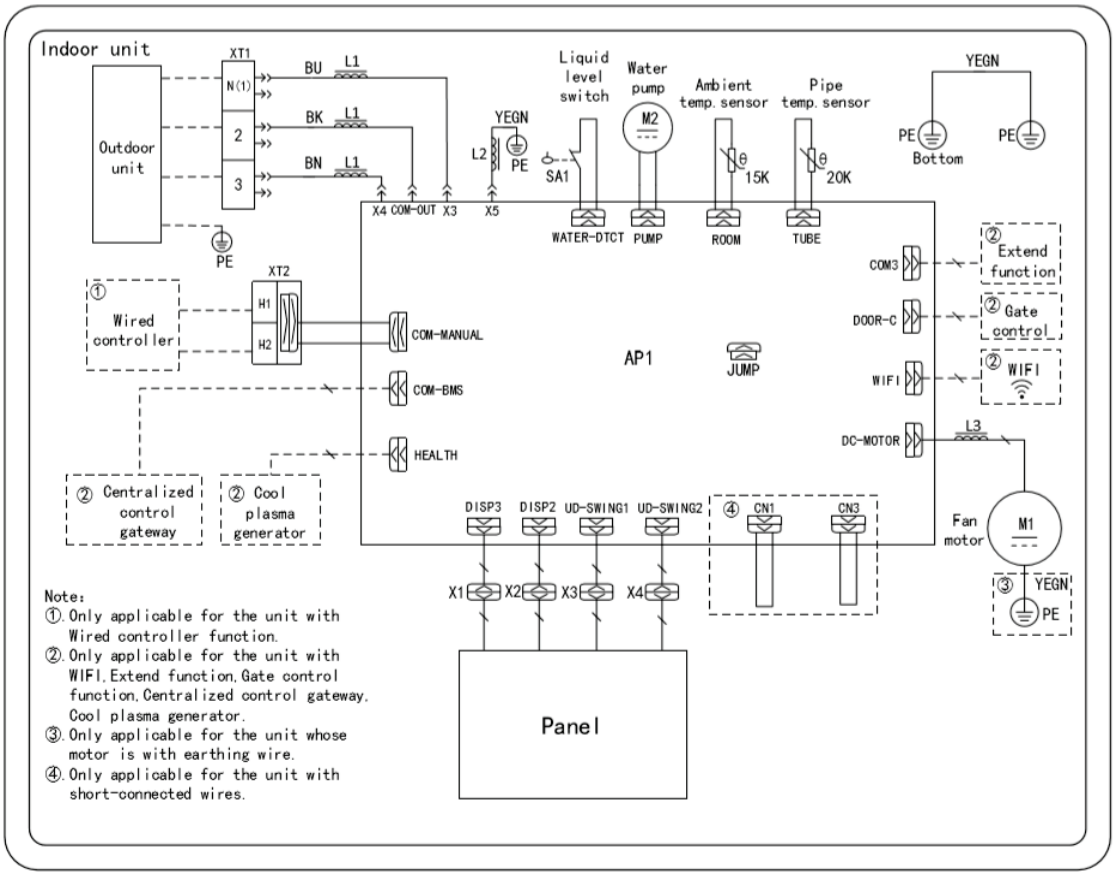

Duct Type

Model: ASD-12BI2

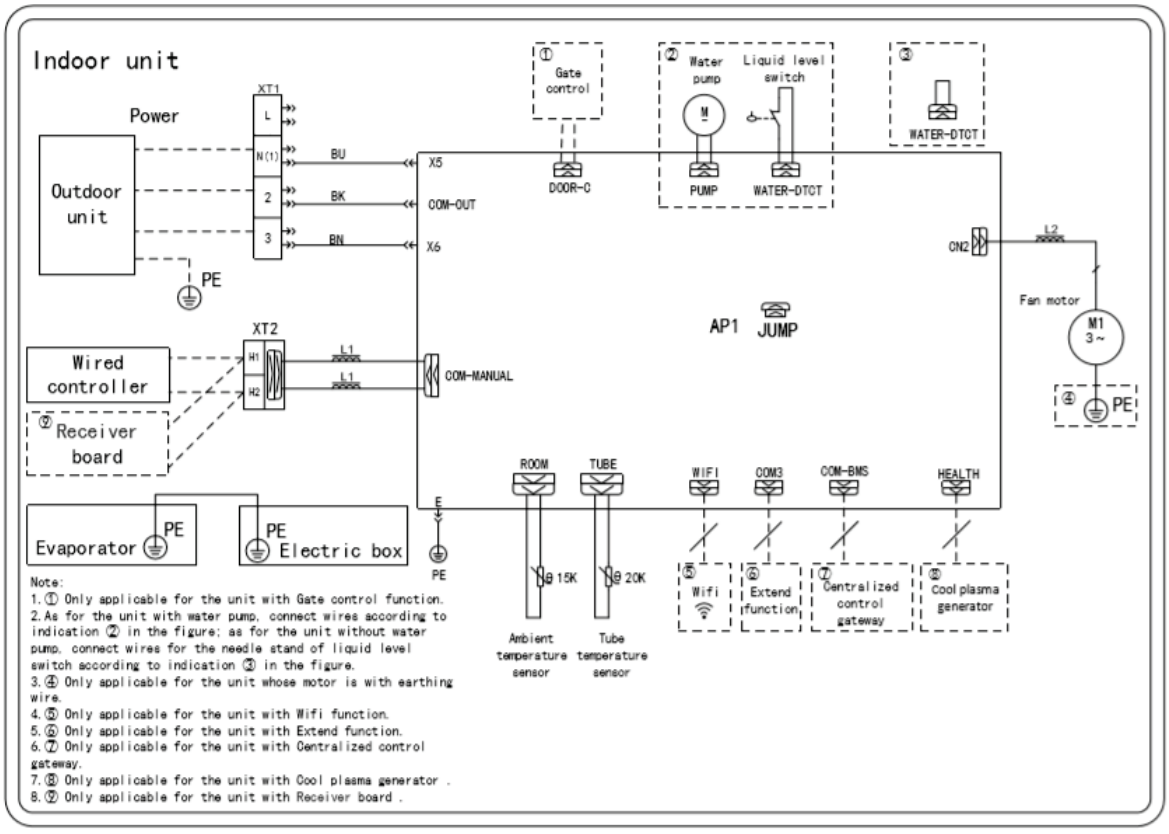

Model: ASD-18BI2

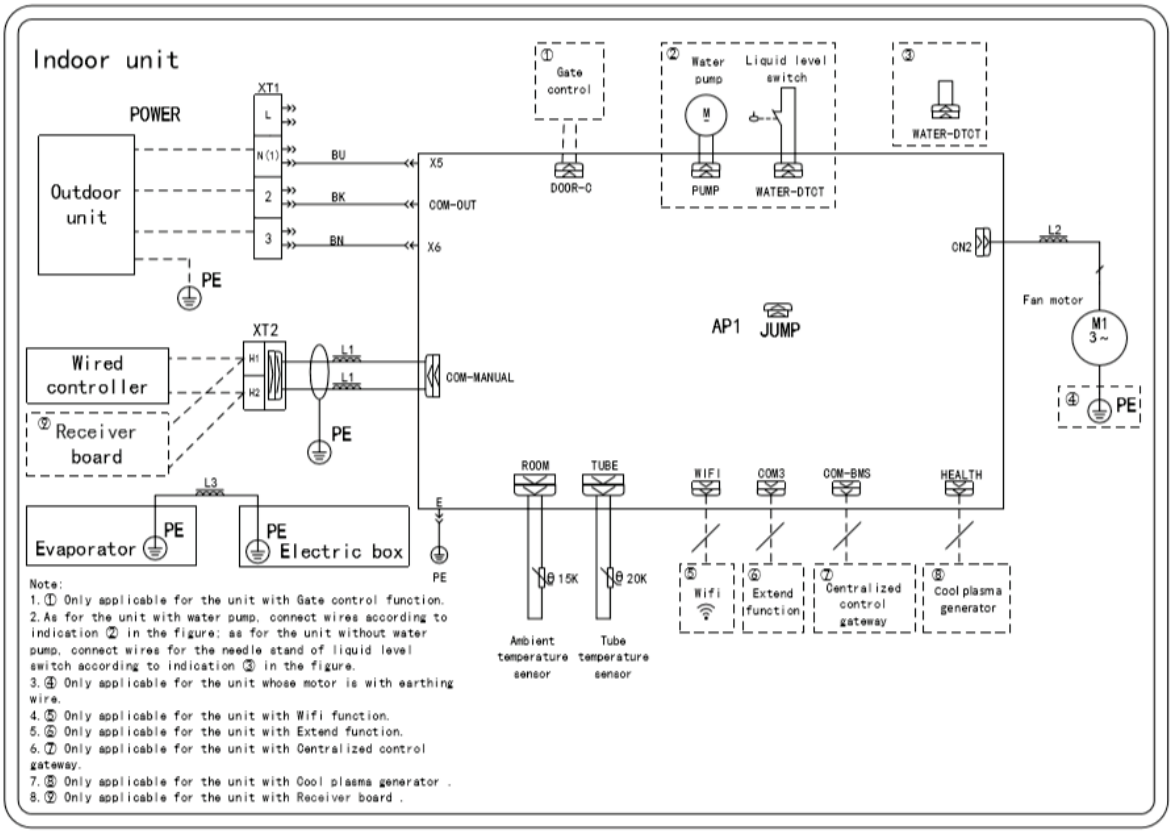

Model: ASD-24BI2, ASD-30BI2

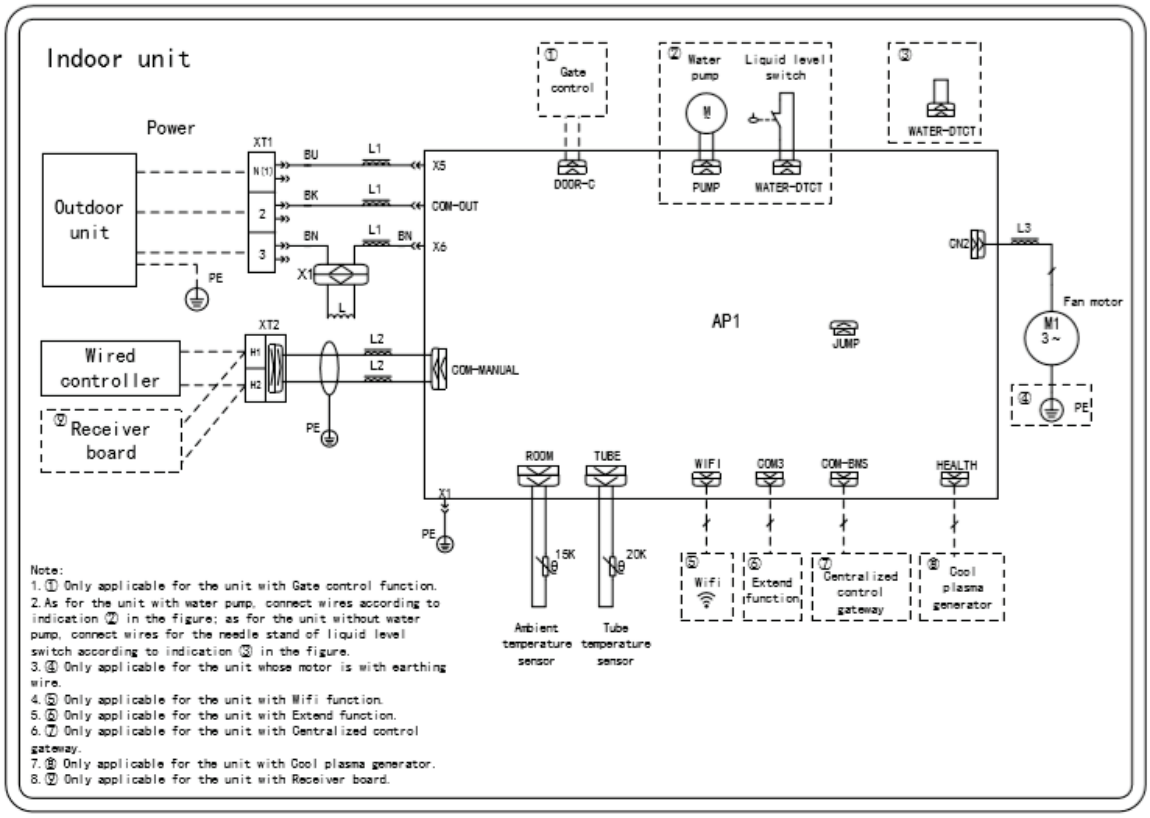

Model: ASD-36BI2, ASD-42BI2

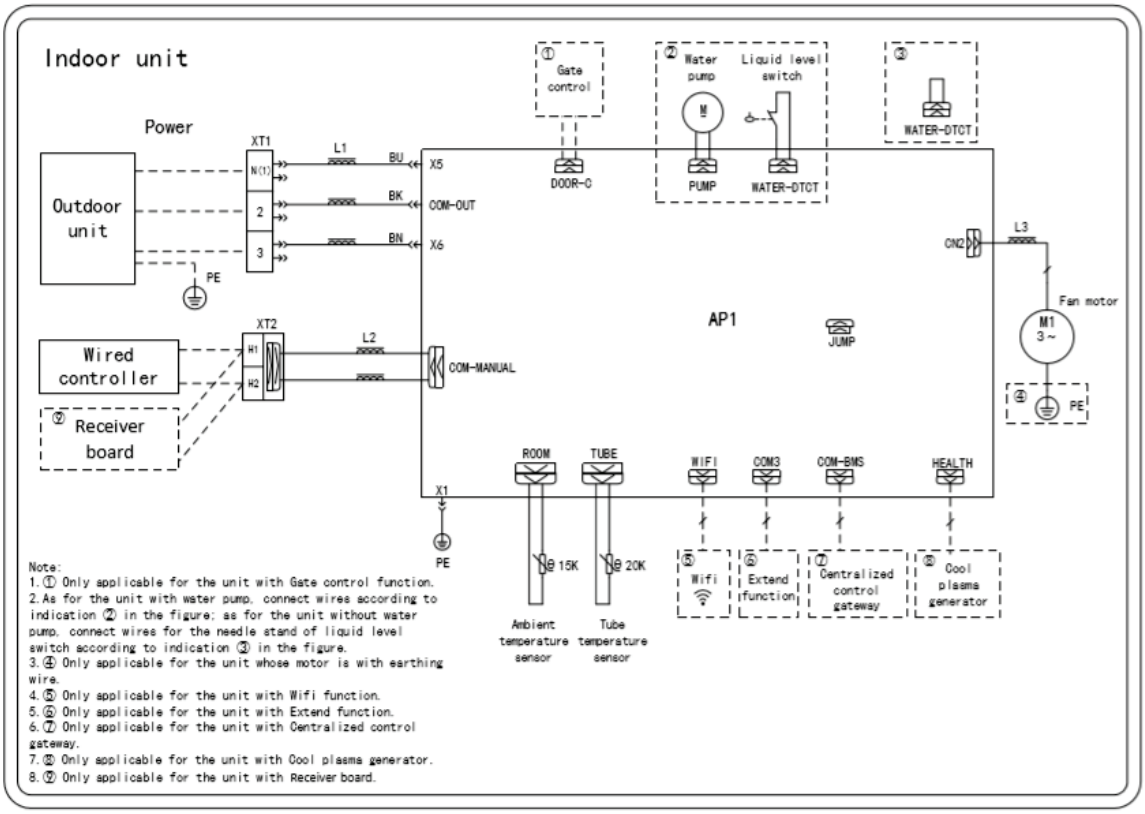

Model: ASD-48BI2, ASD-60BI2

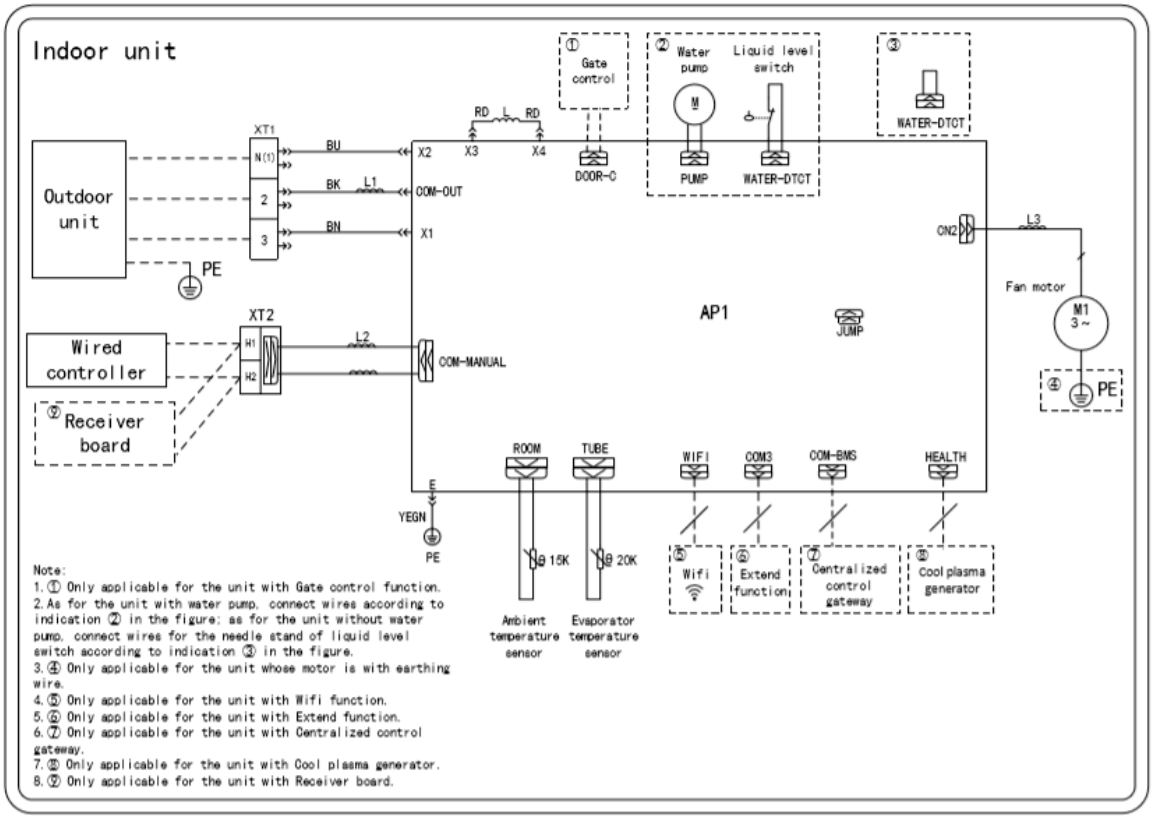

Floor Ceiling Type

Model: ASF-12BI2, ASF-18BI2, ASF-24BI2, ASF-30BI2, ASF-42BI2

ASF-48BI2, ASF-60BI2

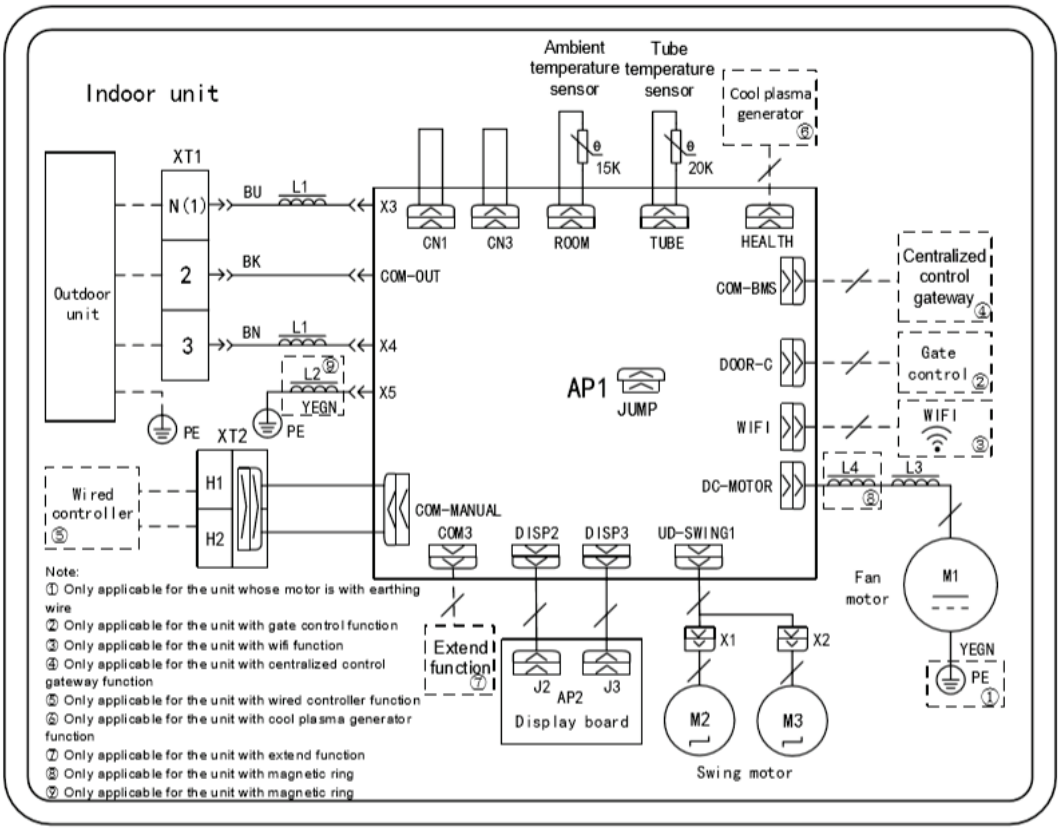

Model: ASF-36BI2

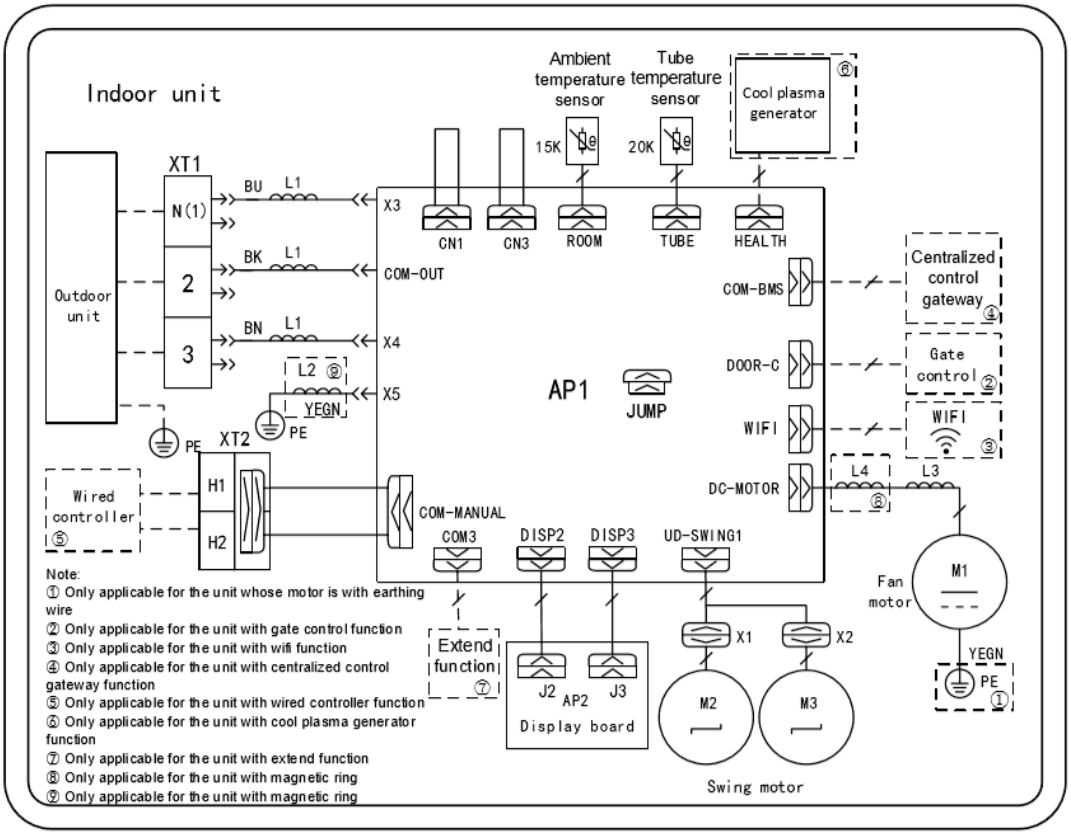

3.2 PCB Layout

3.2.1 Interface

Indoor unit:

Model: ASC-12BI2, ASC-18BI2

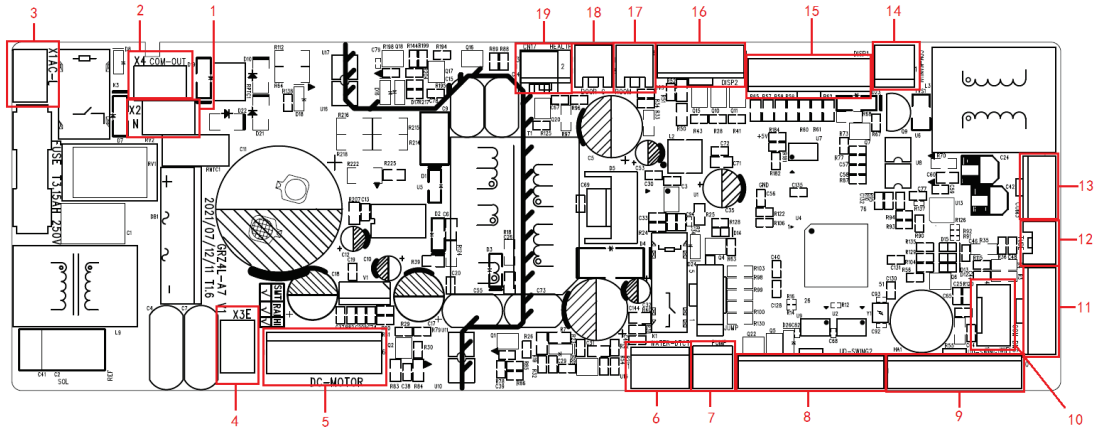

No.	Printing	Interface	No.	Printing	Interface
1	X2(N)	Neutral wire input	2	X4(COM-OUT)	ODU communication interface
3	X1(AC-L)	Live wire input	4	X3(E)	Ground wire
5	DC-MOTOR	DC motor output	6	WATER-DTCT	Water level switch
7	PUMP	water pump	8	UD-SWING2	Vertical swing output 2
9	UD-SWING1	Vertical swing output 1	10	WIFI	WiFi
11	COM-BMS	MODBUS gateway interface	12	TUBE	Evaporator pipe pipetemperature sensor
13	COM3	Function expansion interface	14	COM-MANUAL	Wired control communication interface
15	DISP1	Light board interface 1	16	DISP2	Light board interface 2
17	ROOM	Ambient temperature sensor interface	18	DOOR-C	Door control
19	HEALTH	Cold plasma interface	—	—	—

Model: ASC-24BI2, ASC-30BI2, ASC-36BI2, ASC-42BI2, ASC-48BI2, ASC-60BI2

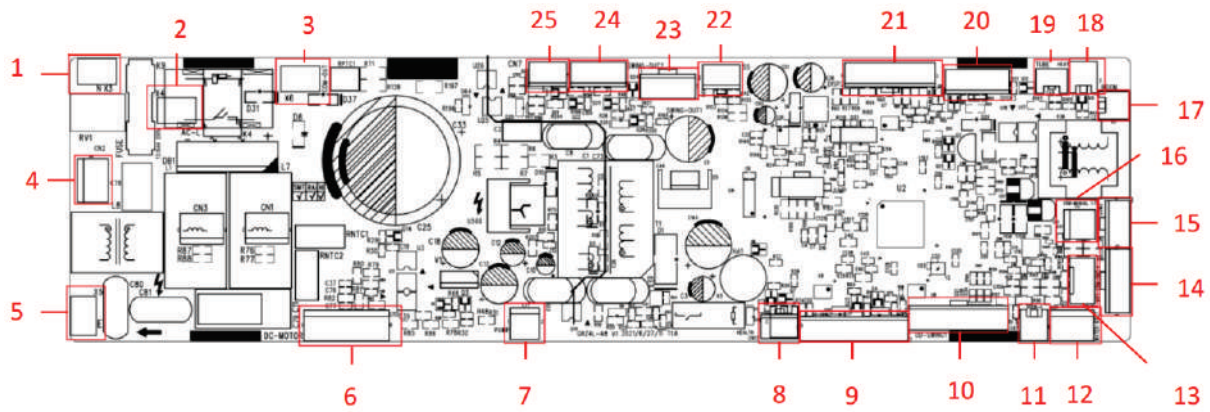

No.	Printing	Interface	No.	Printing	Interface
1	X3	Power supply	2	X4	Power supply
3	COM-OUT	Zero Fire Network Communication Interface	4	CN2	Returning surface panel synchronous motor zero fire power supply terminal
5	X5	Ground wire	6	DC-MOTOR	DC motor output
7	PUMP	water pump	8	HEALTH	Cold plasma interface
9	UD-SWING2	Vertical swing output 2	10	UD-SWING1	Vertical swing output 1
11	DOOR-C	Door control	12	WATER-DTCT	Water level switch
13	WIFI	WIFI	14	COM-BMS	MODBUS gateway interface
15	COM3	Function expansion interface	16	COM-MANUAL	Wired control communication interface
17	ROOM	Ambient temperature sensor interface	18	HEAT	Electric heating interface
19	TUBE	Evaporator pipe pipetemperature sensor	20	DISP3	Light board interface 3
21	DISP2	Light board interface 2	22	SS	Back ventilation panel limit switch
23	SWING-OUT1	Export wind lifting outlet 1	24	SWING-OUT2	Export wind lifting outlet 2
25	CN7	Back air lifting panel synchronous motor	—	—	—

Model: ASD-12BI2, ASD-18BI2

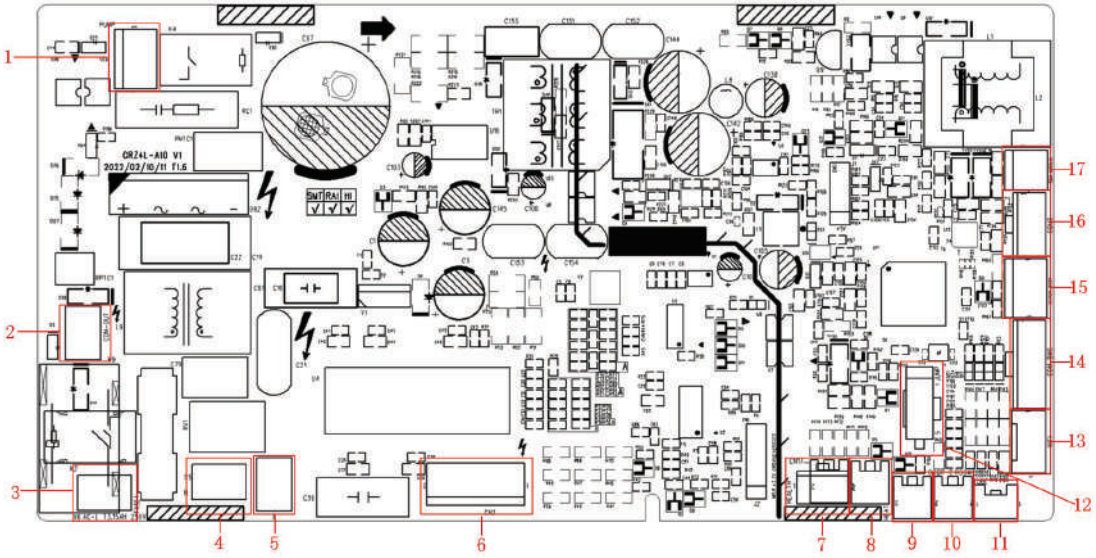

No.	Printing	Interface	No.	Printing	Interface
1	PUMP	water pump	2	COM-OUT	ODU communication interface
3	X6	Live wire input	4	X5	Neutral wire input
5	E	Ground wire	6	CN2	Motor output
7	HEALTH	Cold plasma interface	8	HEAT	Electric heating interface
9	DOOR-C	Door control	10	ROOM	Ambient temperature sensor interface
11	TUBE	Evaporator pipe pipetemperature sensor	12	JUMP	Jumper cap
13	WIFI	WiFi interface	14	COM-BMS	MODBUS gateway interface
15	WATER-DTCT	Water level switch	16	COM3	Function expansion interface
17	COM-MANUAL	Wired control communication interface	—	—	—

Model: ASD-24BI2, ASD-30BI2, ASD-36BI2, ASD-42BI2

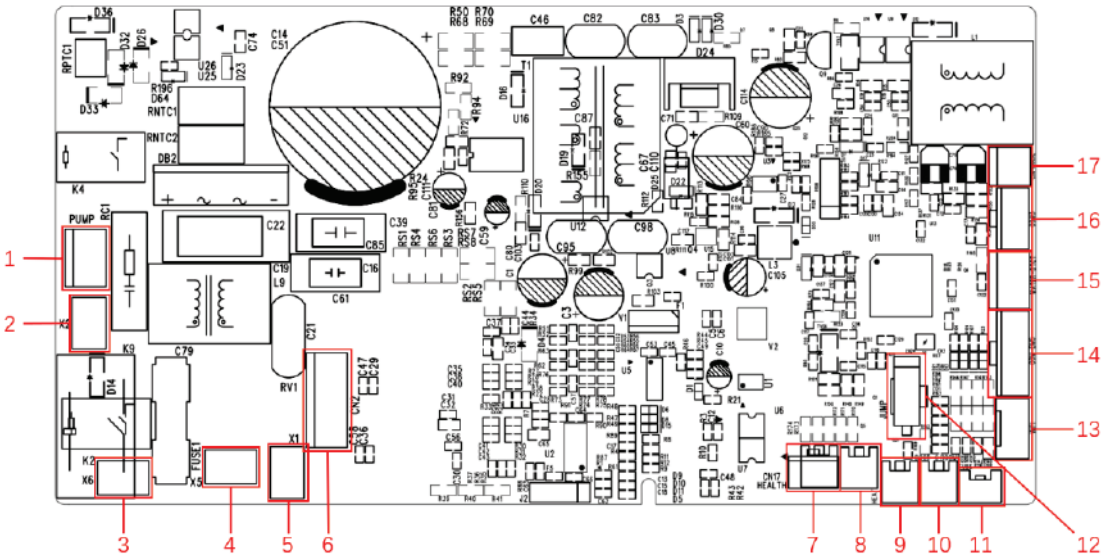

No.	Printing	Interface	No.	Printing	Interface
1	PUMP	water pump	2	X2	ODU communication interface
3	X6	Live wire input	4	X5	Neutral wire input
5	X1	Ground wire	6	CN2	motor output
7	HEALTH	Cold plasma interface	8	HEAT	Electric heating interface
9	DOOR-C	Door control	10	ROOM	Ambient temperature sensor interface
11	TUBE	Evaporator pipe pipetemperature sensor	12	JUMP	jumper cap
13	WIFI	WiFi interface	14	COM-BMS	MODBUS gateway interface
15	WATER-DTCT	Water level switch	16	COM3	Function expansion interface
17	COM-MANUAL	Wired control communication interface	—	—	—

Model: ASD-48BI2, ASD-60BI2

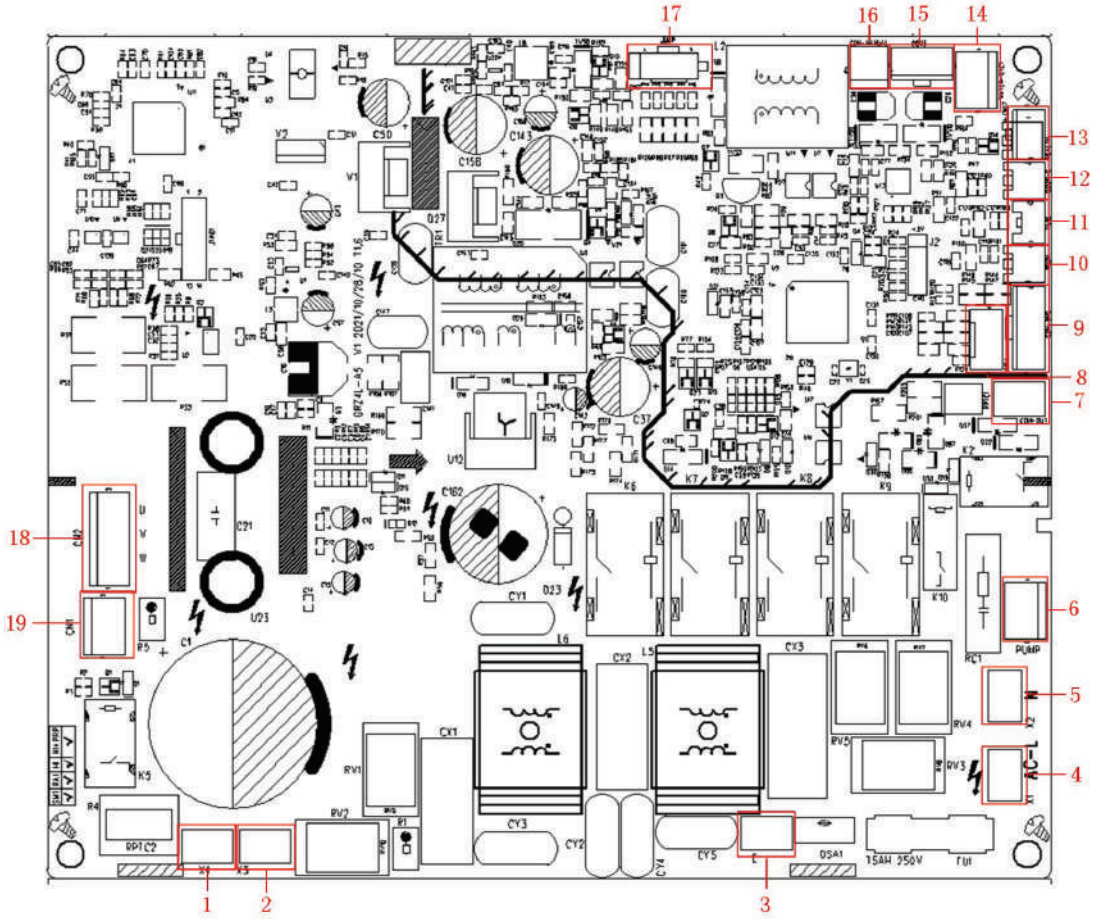

No.	Printing	Interface	No.	Printing	Interface
1	X4	Reactor	2	X3	Reactor
3	E	Ground wire	4	X1	Live wire input
5	X2	Neutral wire input	6	PUMP	water pump
7	COM-OUT	ODU communication interface	8	WIFI	WiFi interface
9	COM-BMS	MODBUS gateway interface	10	ROOM	Ambient temperature sensor interface
11	TUBE	Evaporator pipe pipetemperature sensor	12	DOOR-C	Door control
13	HEALTH	Cold plasma interface	14	WATER-DTCT	Water level switch
15	COM3	Function expansion interface	16	COM-MANUAL	Wired control communication interface
17	JUMP	Jumper cap	18	CN2	Motor output
19	CN1	310V DC power supply	—	—	—

Model: ASF-12BI2, ASF-18BI2, ASF-24BI2, ASF-30BI2

ASF-36BI2, ASF-42BI2, ASF-48BI2, ASF-60BI2

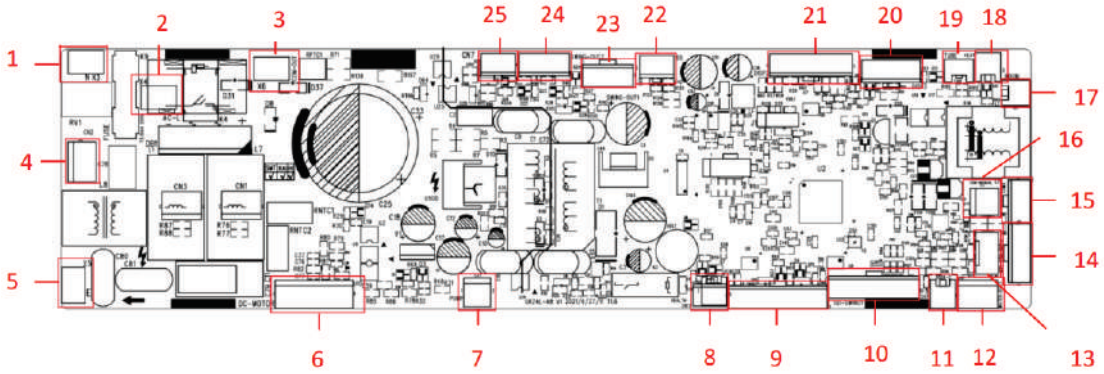

No.	Printing	Interface	No.	Printing	Interface
1	X3	Power supply	2	X4	Power supply
3	COM-OUT	Communication Interface	4	CN2	Returning surface panel synchronous motor zero fire power supply terminal
5	X5	Ground wire	6	DC-MOTOR	DC motor output
7	PUMP	water pump	8	HEALTH	Cold plasma interface
9	UD-SWING2	Vertical swing output 2	10	UD-SWING1	Vertical swing output 1
11	DOOR-C	Door control	12	WATER-DTCT	Water level switch
13	WIFI	WIFI	14	COM-BMS	MODBUS gateway interface
15	COM3	Function expansion interface	16	COM-MANUAL	Wired control communication interface
17	ROOM	Ambient temperature sensor interface	18	HEAT	Electric heating interface
19	TUBE	Evaporator pipe pipetemperature sensor	20	DISP3	Light board interface 3
21	DISP2	Light board interface 2	22	SS	Back ventilation panel limit switch
23	SWING-OUT1	Export wind lifting outlet 1	24	SWING-OUT2	Export wind lifting outlet 2
25	CN7	Back air lifting panel synchronous motor	—	—	—

Outdoor unit

Model: ASGE-12BI2

Mainboard:

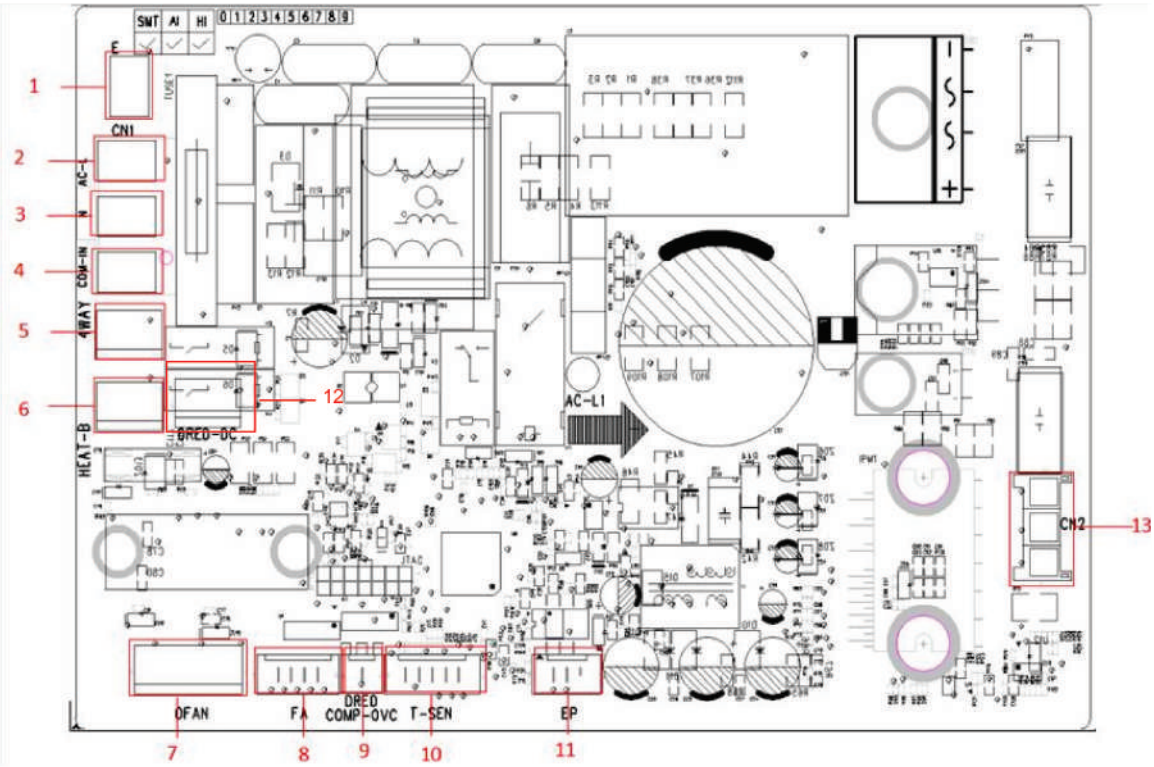

No.	Printing	Interface	No.	Printing	Interface
1	E	Ground wire	2	AC-L	Live wire
3	N	Neutral wire	4	COM-IN	Communication wire
5	4WAY	4-way valve	6	HEAT-B	Chassis electric heating
7	OFAN	External drive DC fan	8	FA	Solenoid expansion valve
9	COMP-OVC	Compressor overload detection	10	T-SEN	Temperature sensor group
11	EP	After-sales terminal	12	DRED-DC	DRED DC interface
13	CN2	Compressor interface	—	—	—

Model: ASGE-18BI2

Mainboard:

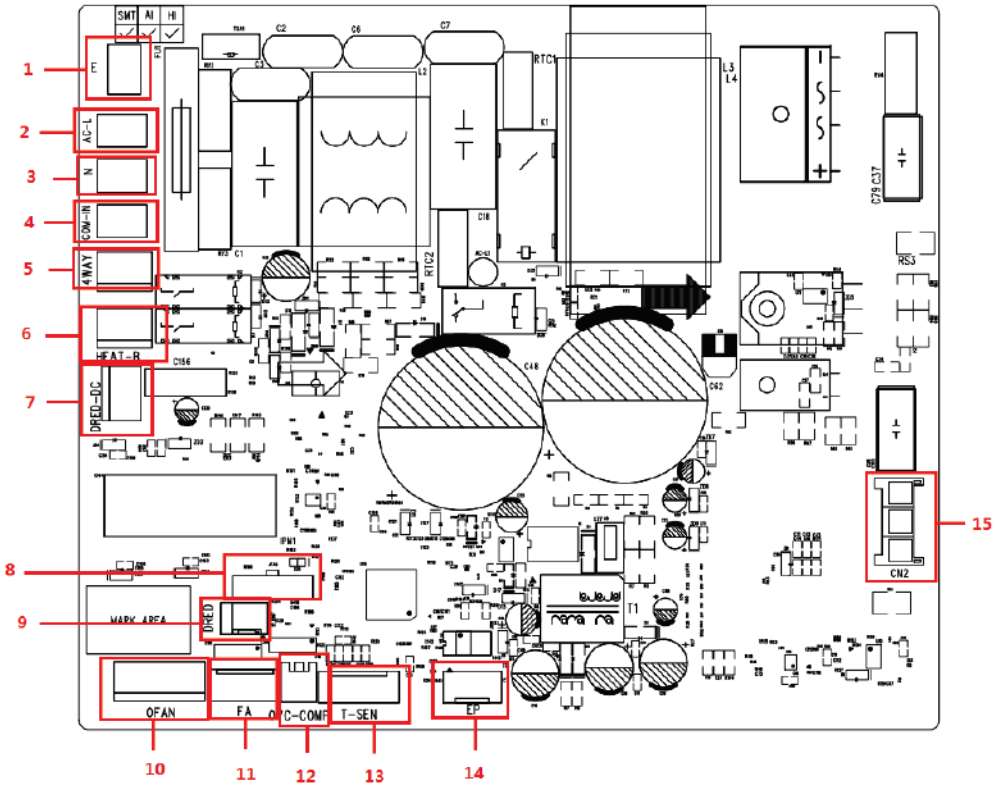

No.	Printing	Interface	No.	Printing	Interface
1	E	Ground wire	2	AC_L	Live wire
3	N	Neutral wire	4	COM-IN	Communication wire
5	4WAY	4-way valve	6	HEAT_B	Chassis electric heating
7	DRED-DC	DRED DC interface	8	JTAG	Program debug port
9	DRED	DRED interface	10	OFAN	External drive DC fan
11	FA	After-sales terminal	12	OVC_COMP	Compressor overload detection
13	T_SEN	Temperature sensor group	14	EP	After-sales terminal
15	CN1	Compressor interface	—	—	—

Model: ASGE-24BI2, ASGE-30BI2

Mainboard:

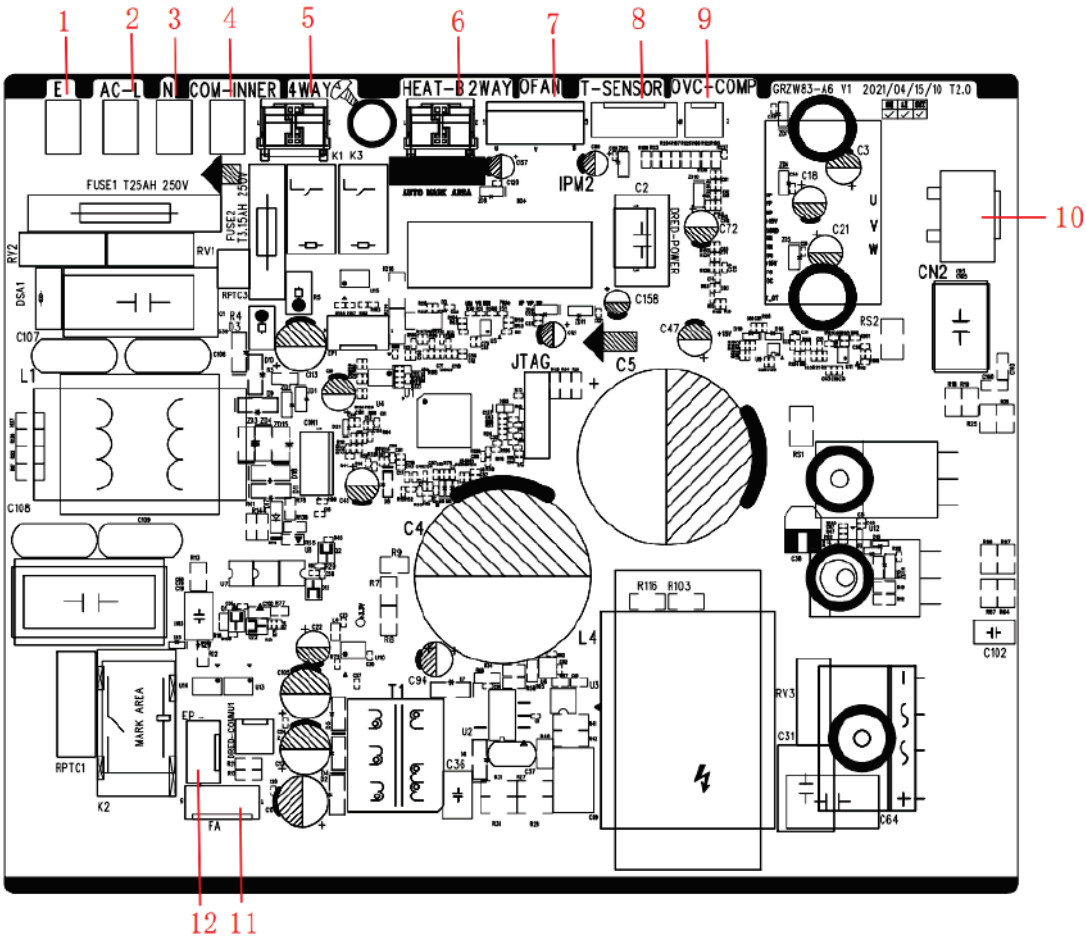

No.	Printing	Interface	No.	Printing	Interface
1	E	Ground wire	2	AC-L	Live wire
3	N	Neutral wire	4	COM-INNER	Communication wire
5	4WAY	4-way valve	6	HEAT-B	Chassis electric heating
7	OFAN	External drive DC fan	8	T-SENSOR	Temperature sensor group
9	OVC-COMP	Compressor overload detection	10	CN2	Compressor interface
11	FA	Solenoid expansion valve	12	EP	After-sales terminal

Model: ASGE-36BI2, ASGE-42BI2

Mainboard:

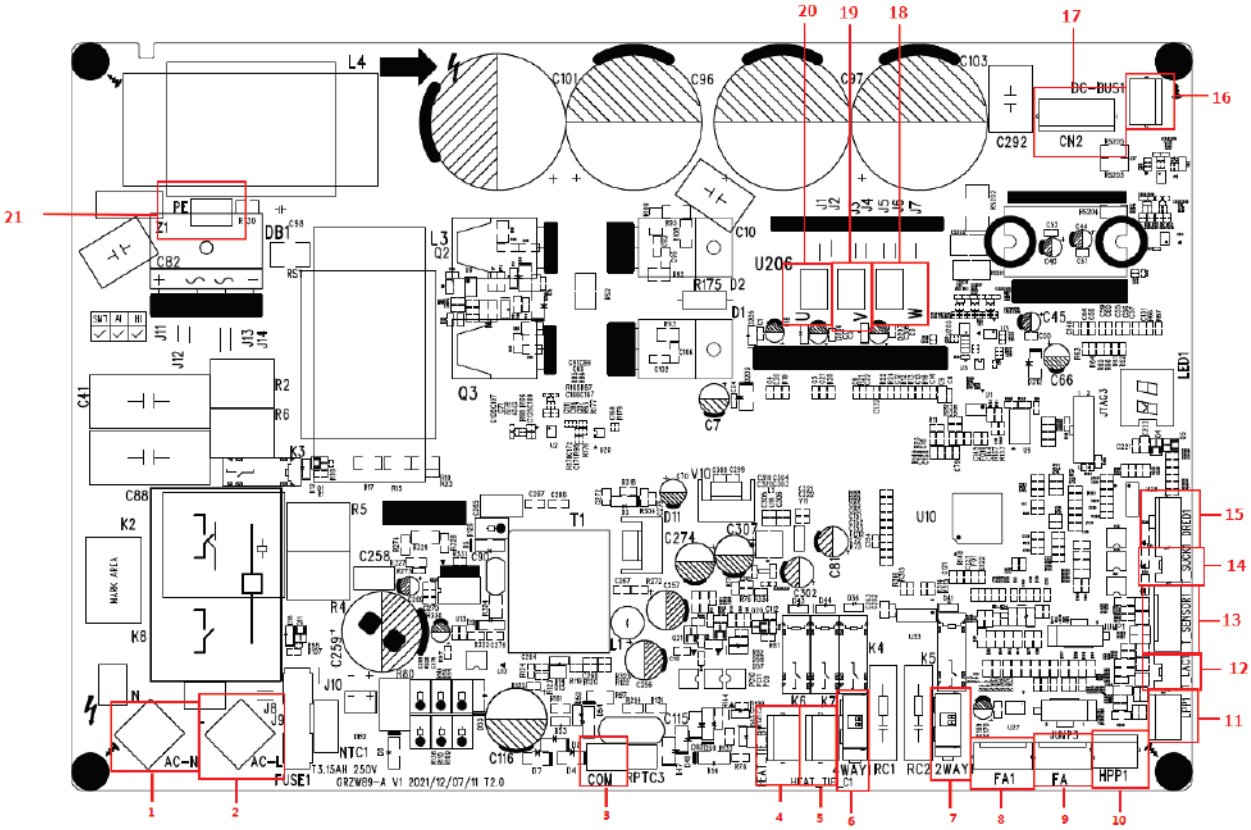

No.	Printing	Interface	No.	Printing	Interface
1	AC-N	Neutral wire	2	AC-L	Live wire
3	COM	Zero Fire Communication Terminal	4	HEAT_TIE_B1	Chassis electric heating
5	HEAT_TIE_C1	Compressor heating	6	4WAY	4-way valve
7	2WAY	2-way valve	8	FA1	Heat electronic expansion valve
9	FA	Refrigeration electronic expansion valve	10	HPP1	System high pressure protection interface
11	LPP1	System low pressure protection interface	12	T_LAC1	Low temperature cooling temperature sensor
13	T_SENSOR1	Temperature sensor group	14	T_SUCK1	Condenser medium pipe temperature sensor
15	DRED1	DRED Communication Interface	16	DC-BUS1	Discharge terminal
17	CN2	External drive DC fan	18	W	Inverter compressor W phase
19	V	Inverter compressor V phase	20	U	Inverter compressor U phase
21	PE	Ground wire	—	—	—

Filtering Board:

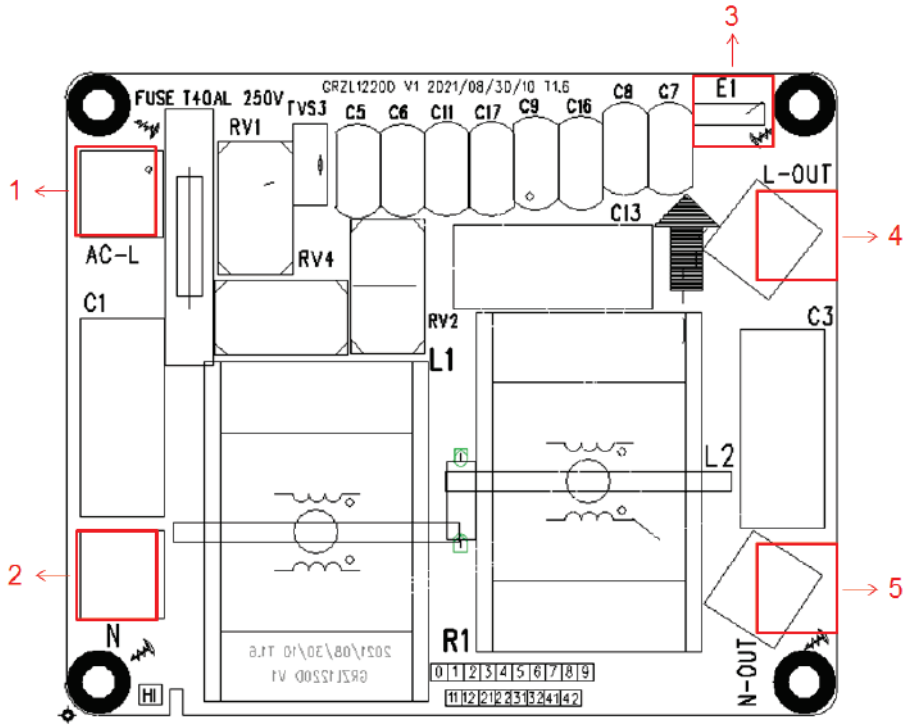

No.	Printing	Interface	No.	Printing	Interface
1	AC-L	Power input live wire terminal	2	AC-N	Power input neutral wire terminal
3	E1	Filtering board ground wire terminal	4	E2	Filtering board grounding hole (reserved)
5	N-OUT	Power output neutral wire terminal (reserved)	—	—	—

Model: ASGE-48BI2

Mainboard:

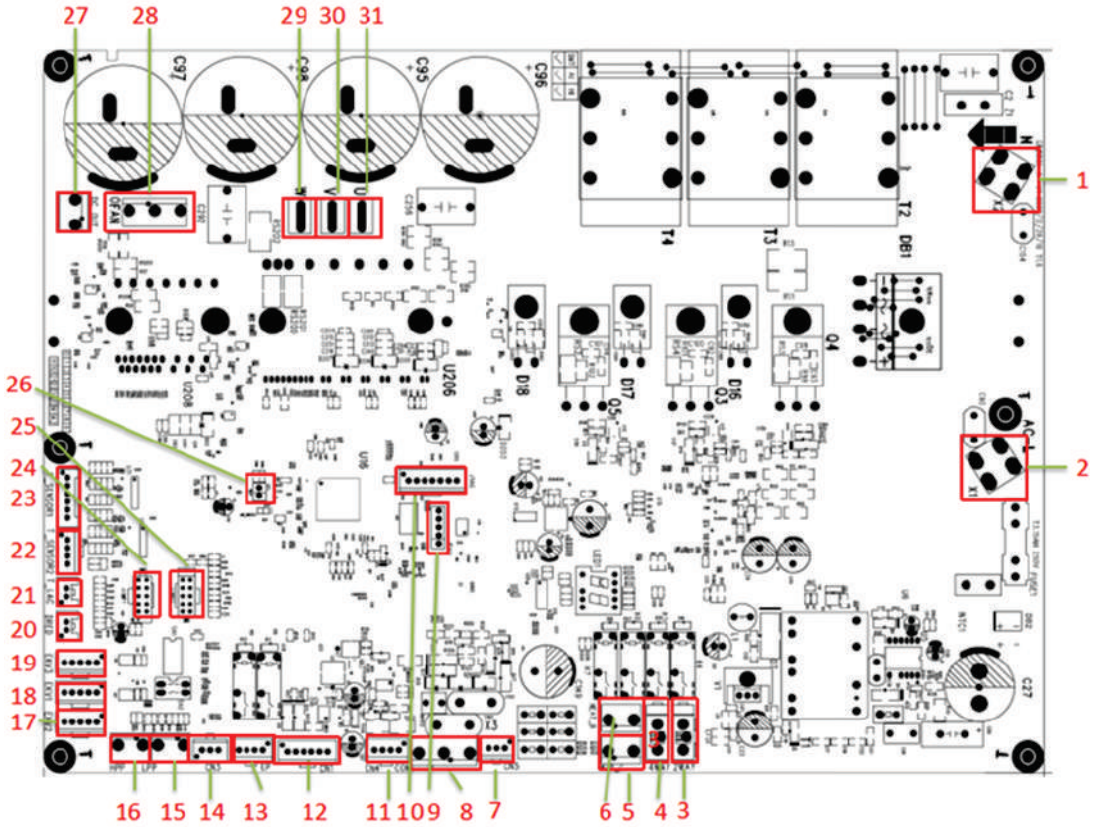

No.	Printing	Interface	No.	Printing	Interface
1	N	Neutral wire	2	AC-L	Live wire
3	2WAY	2-way valve	4	4WAY	4-way valve
5	HEAT_C	Compressor chassis electric heating	6	HEAT_B	Chassis electric heating
7	CN5	Relay control terminal	8	COM	Zero Fire Communication Terminal
9	JTAG1	EE input interface	10	JTAG	Burning port
11	CN4	485 communication interface	12	CN1	24V control interface
13	EP	Zero Fire Communication Monitoring Circuit Interface	14	CN3	Pressure Sensor
15	LPP	System low pressure protection interface	16	HPP	System high pressure protection interface
17	EKV2	Heat electronic expansion valve	18	EKV1	Refrigeration electronic expansion valve
19	EKV3	Injunctone electronic expansion valve	20	DRED	Dred Communication Interface
21	T_LAC	Temporary temperature package interface	22	T_SENSOR2	Exercise Temperature Pack
23	T_SENSOR1	Outer tube outer ring exhaust warm package interface	24	JUMP1	Master jumper cap
25	JUMP2	Drive jumper cap	26	TEST	Fast test port
27	DC_OUT	Discharge terminal	28	OFAN	Fan interface
29	W	Inverter compressor W phase	30	V	Inverter compressor V phase
31	U	Inverter compressor U phase	—	—	—

Filtering Board:

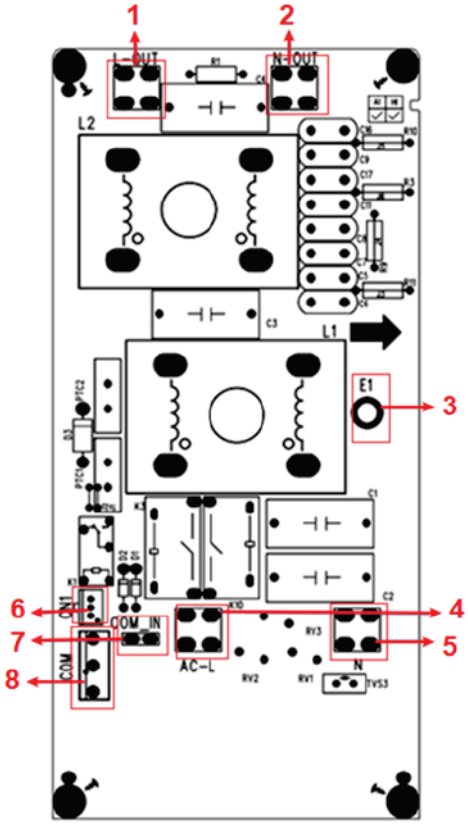

No.	Printing	Interface	No.	Printing	Interface
1	L-OUT	Power output live wire terminal	2	N-OUT	Power output neutral wire terminal (reserved)
3	E1	Filtering board ground wire terminal	4	AC-L	Power input live wire terminal
5	AC-N	Power input neutral wire terminal	6	CN1	Relay control output interface
7	COM –IN	Communication input Terminal	8	COM	Zero Fire Communication Terminal

Model: ASGE-36BI2-3, ASGE-42BI2-3

Mainboard:

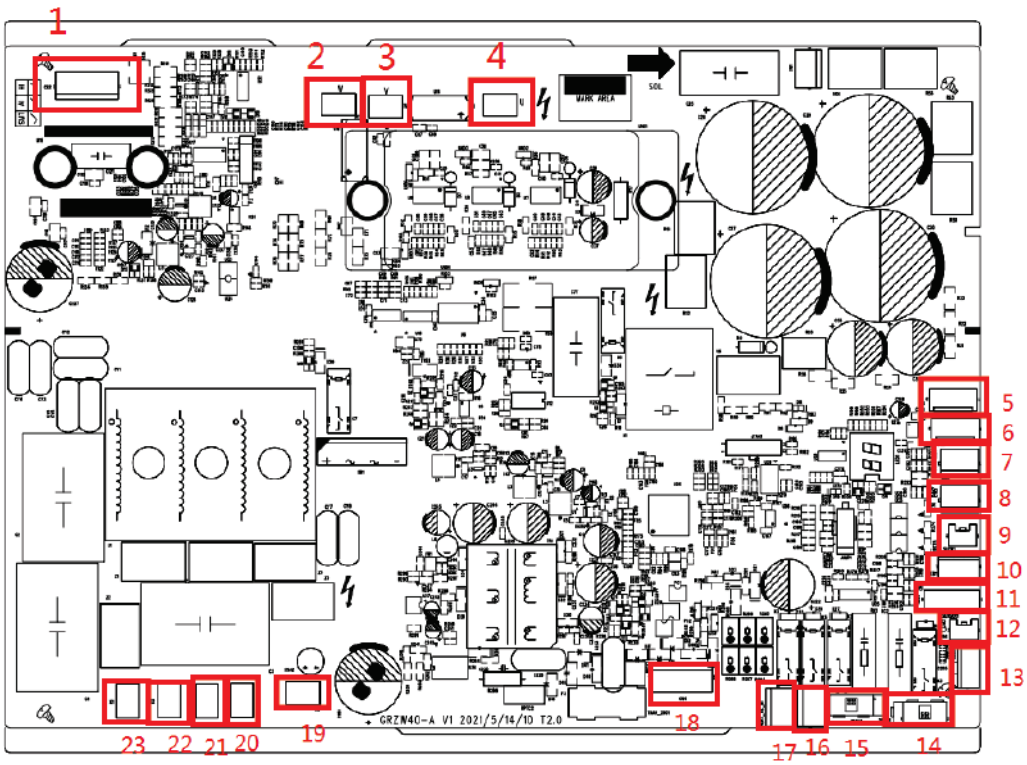

No.	Printing	Interface	No.	Printing	Interface
1	CN2	Fan drive wire	2	W	Inverter compressor W phase
3	V	Inverter compressor V phase	4	U	Inverter compressor U phase
5	FA	Refrigeration electromagnetic expansion valve	6	FA1	Heating electromagnetic expansion valve
7	HPP1	System high pressure protection interface	8	LPP1	System low pressure protection interface
9	T_SUCK1	Inspiration temperature package interface	10	DRED1	Dred Communication Interface
11	T_SENSOR1	Inspiration temperature package interface	12	T_LAC1	Low temperature refrigeration temperature detection
13	EP	Live wire and Neutral wire Communication monitoring interface	14	2WAY1	2-way valve
15	4WAY1	4-way valve	16	HEAT_TIE_C1	Compressed electromechanical heating belt interface
17	HEAT_TIE_B1	Chassis electric heating tropical interface	18	CN4	Live wire and Neutral wire Communication Interface
19	X5	Ground wire	20	X4	Neutral wire
21	X3	Live wire 3	22	X2	Live wire 2
23	X1	Live wire 1	—	—	—

Filtering Board:

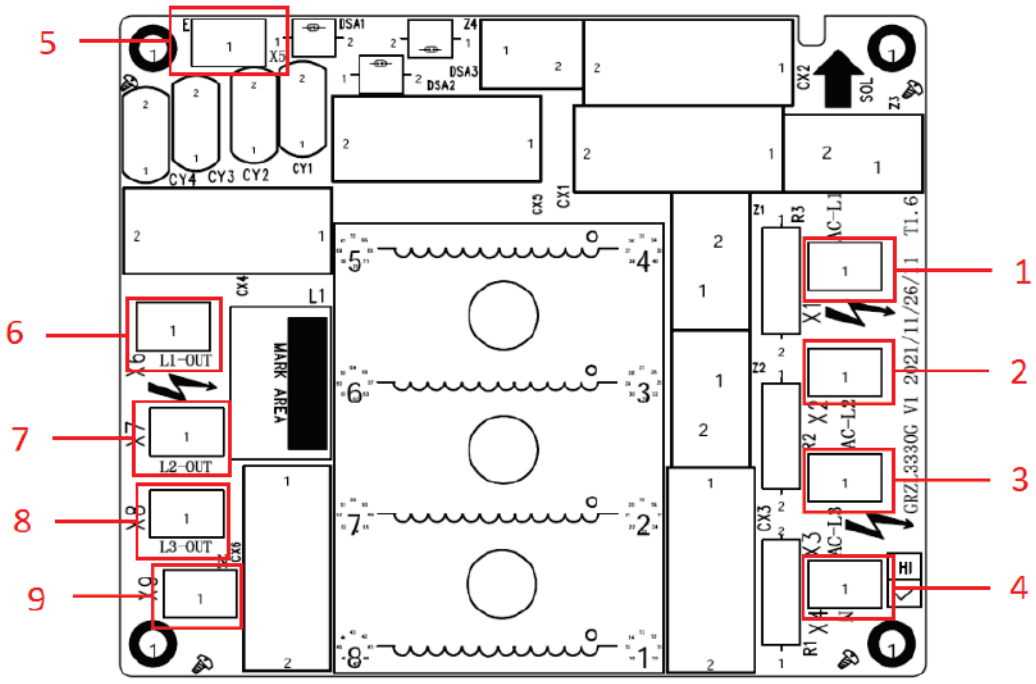

No.	Printing	Interface	No.	Printing	Interface
1	X1	Power input live wire1 terminal	2	X2	Power input live wire2 terminal
3	X3	Power input live wire3 terminal	4	X4	Power input neutral wire terminal
5	X5	Filtering board ground wire terminal	6	X6	Power output live wire1 terminal
7	X7	Power output live wire2 terminal	8	X8	Power output live wire3 terminal
9	X9	Power output neutral wire terminal	—	—	—

Model: ASGE-48BI2-3

Mainboard:

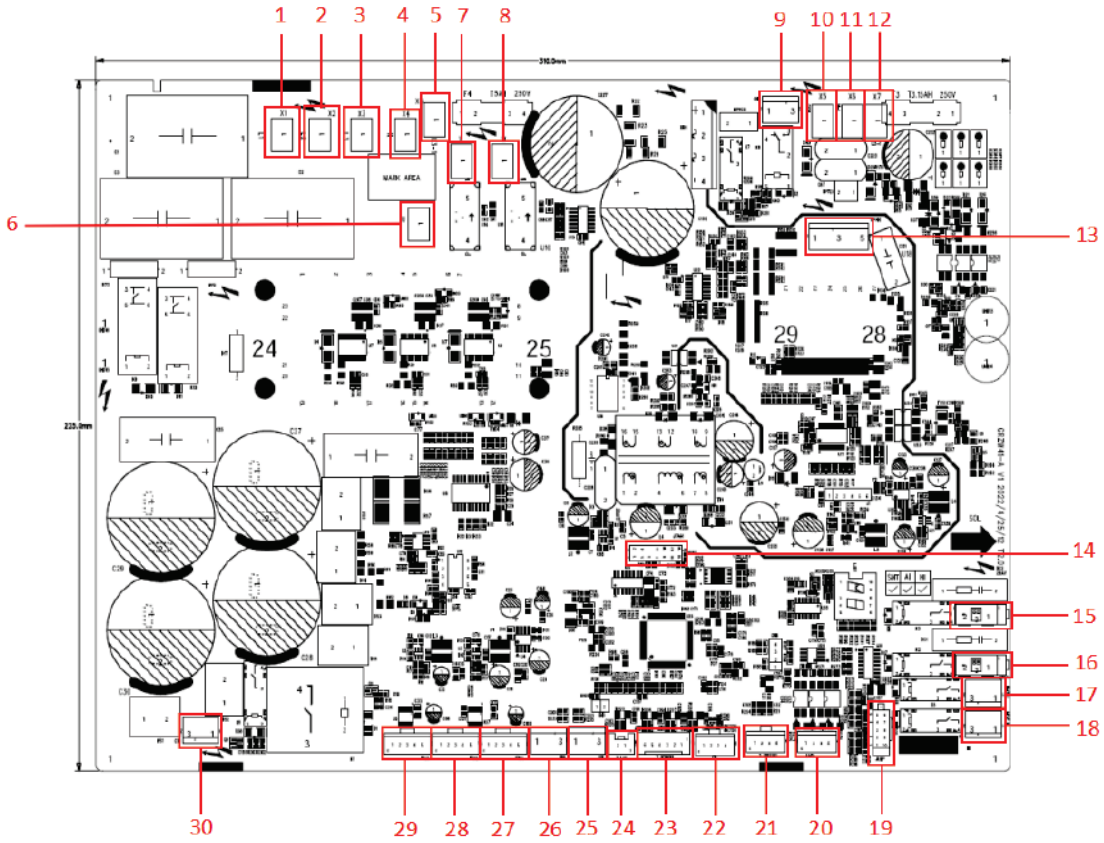

No.	Printing	Interface	No.	Printing	Interface
1	X1	Live wire1	2	X2	Live wire2
3	X3	Live wire3	4	X4	Neutral wire
5	X8	Live wire3	6	U	Inverter compressor U phase
7	V	Inverter compressor V phase	8	W	Inverter compressor W phase
9	CN5	Low-power short-connect interface	10	X5	Live wire and Neutral wire Communication Interface
11	X6	Neutral wire	12	X7	Live wire3
13	OFAN	External drive DC fan	14	JTAG	Program burning interface
15	2WAY	2-way valve	16	4WAY	4-way valve
17	HEAT_C	Compressor electric heating belt	18	HEAT_B	Chassis electric heating belt
19	JUMP	Jumper cap	20	DRED	Dred Communication Interface
21	T_SENSOR2	Temperature sensor group2	22	EP	Zero fire communication monitoring circuit interface
23	T_SENSOR1	Temperature sensor group1	24	T_LAC	Tube temperature sensor
25	LPP	System low pressure protection interface	26	HPP	System high pressure protection interface
27	EKV1	Solenoid expansion valve1	28	EKV2	Solenoid expansion valve2
29	EKV3	Solenoid expansion valve3	30	CN1	DC bus output interface

Filtering Board:

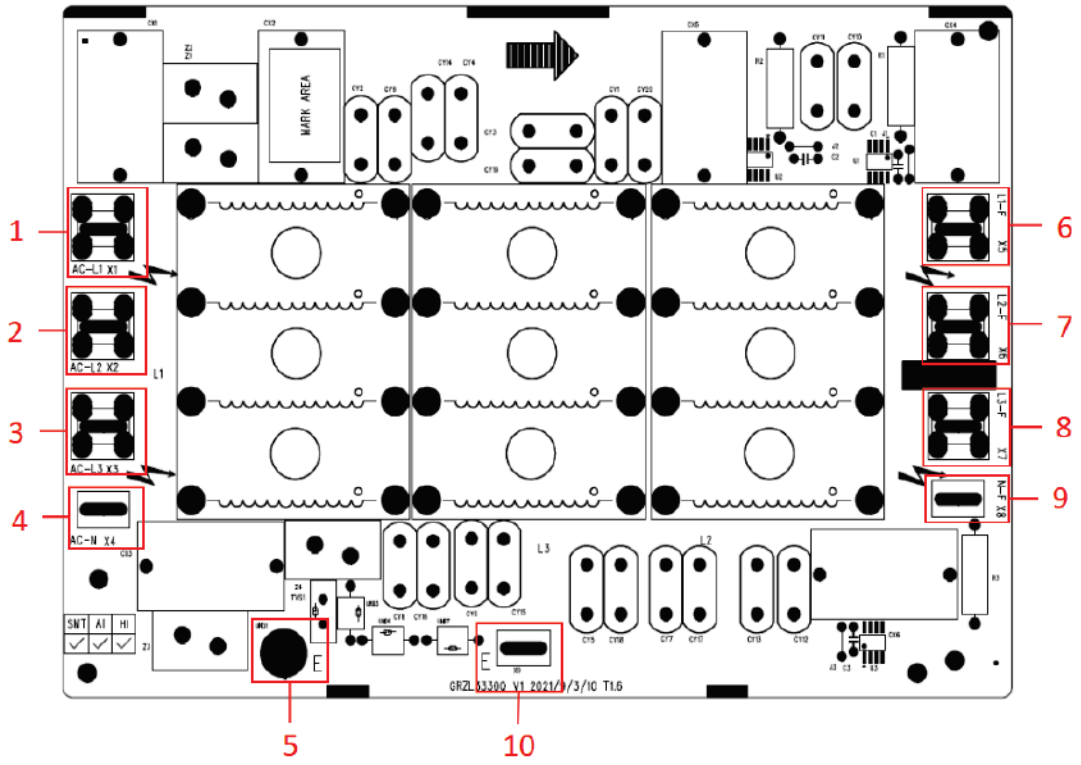

No.	Printing	Interface	No.	Printing	Interface
1	X1	Power input live wire1 terminal	2	X2	Power input live wire2 terminal
3	X3	Power input live wire3 terminal	4	X4	Power input neutral wire terminal
5	E	Filtering board grounding hole	6	X5	Power output live wire1 terminal
7	X6	Power output live wire2 terminal	8	X7	Power output live wire3 terminal
9	X8	Power output neutral wire terminal	10	X9	Filtering board ground wire terminal

Model: ASGE-60BI2-3

Mainboard:

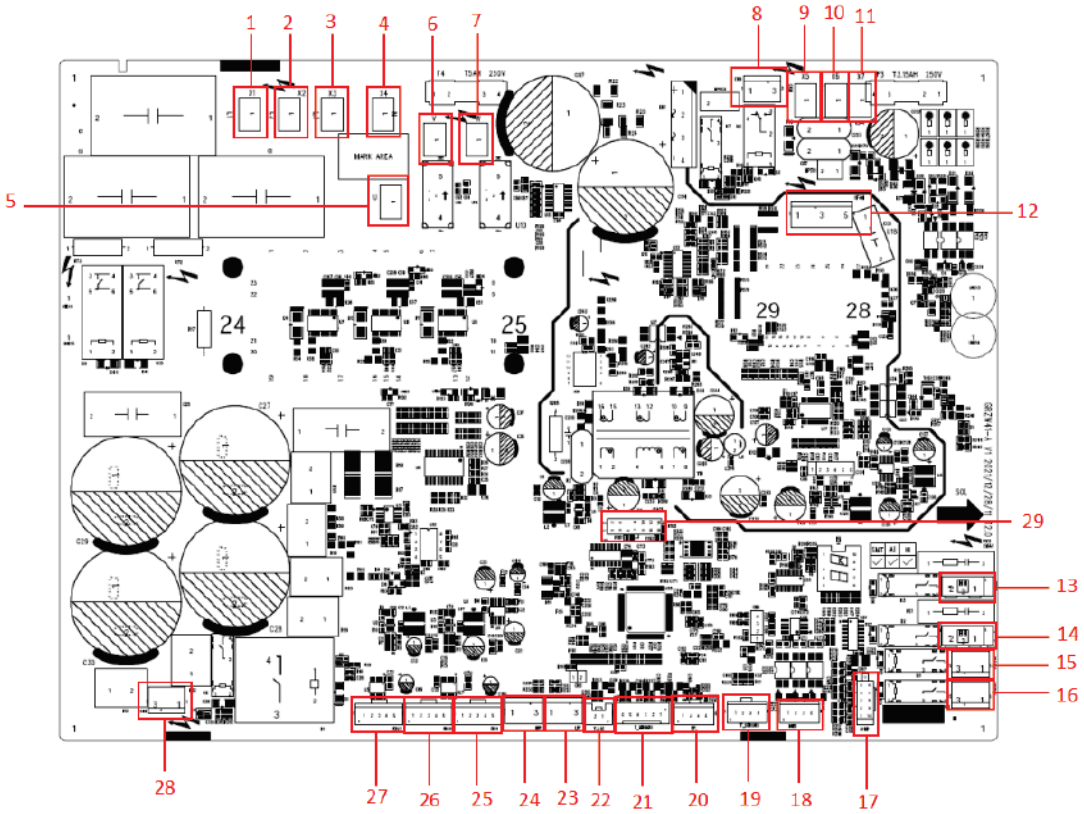

No.	Printing	Interface	No.	Printing	Interface
1	X1	Live wire1	2	X2	Live wire2
3	X3	Live wire3	4	X4	Neutral wire
5	U	Inverter compressor U phase	6	V	Inverter compressor V phase
7	W	Inverter compressor W phase	8	CN5	Low power interface
9	X5	Live wire and Neutral wire Communication Interface	10	X6	Neutral wire
11	X7	Live wire3	12	OFAN	External drive DC fan
13	2WAY	2-way valve	14	4WAY	4-way valve
15	HEAT_C	Compressive electromechanical heating	16	HEAT_B	Chassis electric heating
17	JUMP	Jumper cap	18	DRED	Dred Communication Interface
19	T_SENSOR2	Temperature sensor group	20	EP	Live wire and Neutral wire Communication monitoring interface
21	T_SENSOR1	Temperature sensor group	22	T_LAC	Low temperature cooling temperature sensor
23	LPP	System low pressure protection interface	24	HPP	System high pressure protection interface
25	EKV1	Solenoid expansion valve1	26	EKV2	Solenoid expansion valve2
27	EKV3	Solenoid expansion valve3	28	CN1	DC bus output interface
29	JTAG（JTAG1）	Programming	—	—	—

Filtering Board:

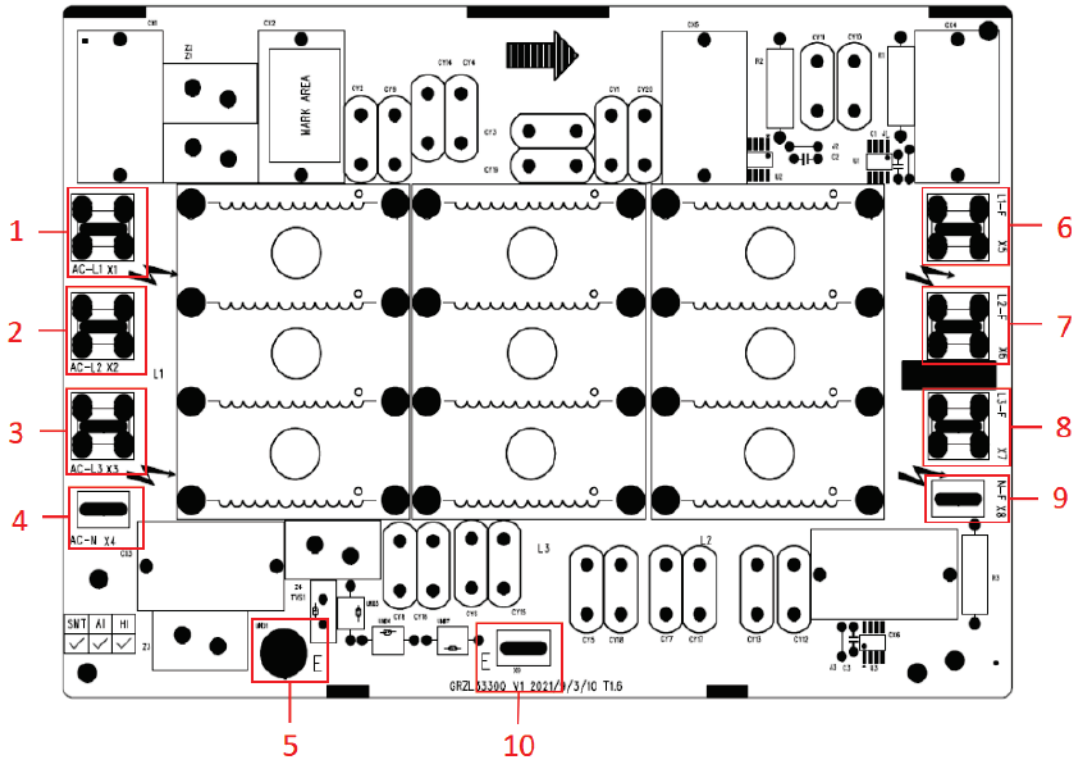

No.	Printing	Interface	No.	Printing	Interface
1	X1	Power input live wire1 terminal	2	X2	Power input live wire2 terminal
3	X3	Power input live wire3 terminal	4	X4	Power input neutral wire terminal
5	E	Filtering board grounding hole	6	X5	Power output live wire1 terminal
7	X6	Power output live wire2 terminal	8	X7	Power output live wire3 terminal
9	X8	Power output neutral wire terminal	10	X9	Filtering board ground wire terminal

3.2.2 IPM, PFC Testing Method

3.2.2.1Method of Testing IPM Module

(1) Preparation before test: prepare a universal meter and turn to its diode option, and then remove the wires U, V, W of the compressor after it is powered off for one minute.

(2) Testing Steps

(3) Step 1: put the black probe on the place P and the red one on the wiring terminal U, V, W respectively as shown in the following figure to measure the voltage between UP, VP and WP.

(4) Step 2: put the red probe on the place N and the black one on the wiring terminal U, V, W respectively as shown in the following figure to measure the voltage between NU, NV and NW.

(5) If the measured voltages between UP, VP, WP, NU, NV, NV are all among 0.3V-0.7V, then it

indicates the IPM module is normal; If any measured valve is 0, it indicates the IPM is damaged.

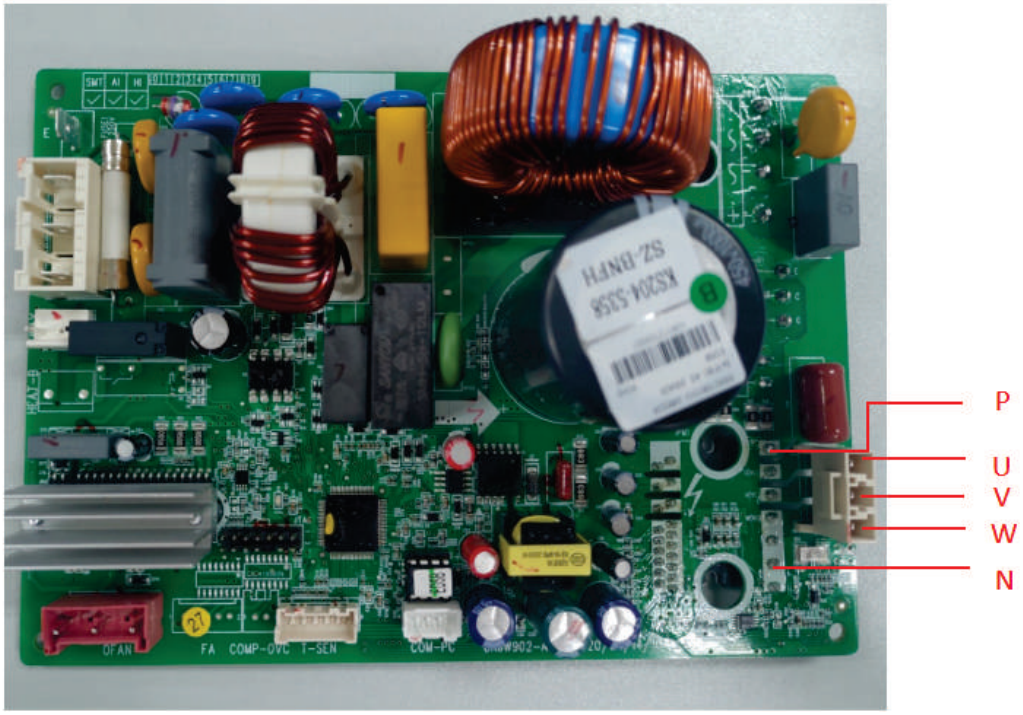

3.3 Error Code

Number	Error code	Error
1	A1	Outdoor fan IPM module protection
2	A6	Master control and DC outdoor fan driver communication error
3	A8	DC outdoor fan driver module high temperature protection
4	A9	DC outdoor fan driver module temperature sensor error
5	AA	DC outdoor fan AC current protection
6	Ab	DC outdoor fan driver reset protection
7	Ac	Outdoor fan startup failure
8	Ad	Outdoor fan Phase-loss protection
9	AE	Outdoor fan current detection circuit error
10	AF	DC outdoor fan driver PFC protection
11	AH	DC outdoor fan driver bus high-voltage protection
12	AJ	Outdoor fan out-of-step protection
13	AL	DC outdoor fan driver bus low-voltage protection
14	An	DC outdoor fan driver memory chip error
15	AP	DC outdoor fan driver input AC voltage error protection
16	Ar	DC outdoor fan driver electrical box temperature sensor error
17	AU	DC outdoor fan driver charge loop error
18	C0	Wired controller and indoor unit communication failure

Number	Error code	Error
19	C1	Indoor ambient temperature sensor error
20	C2	Evaporator temperature sensor error
21	C3	Condenser temperature sensor error
22	C4	ODU jumper cap error
23	C6	Discharge temperature sensor error
24	C7	Condenser meso-temperature sensor error
25	C8	Compressor dial code or jumper cap abnormal
26	C9	Compressor driver memory chip failure
27	CE	Wired controller temperature sensor error
28	CJ	IDU jumper cap error
29	CL	Auto cleaning
30	CP	Multi-main wired controller failure
31	d1	DRED model 1
32	d2	DRED model 2
33	d3	DRED model 3
34	dc	Compressor suction temperature sensor error
35	dH	Wired controller circuit board abnormal
36	dJ	AC sequence protection (phase loss or anti-phase protection)
37	E0	Indoor fan error
38	E1	Compressor high pressure protection
39	E2	Indoor anti-freeze protection
40	E3	Refrigerant lack protection or compressor low pressure protection
41	E4	Compressor air discharge high-temperature protection
42	E6	ODU and IDU communication error
43	E7	Mode conflict
44	E9	Water-full protection
45	EE	Memory chip reading and writing failure
46	EL	Emergency stop (fire alarm)
47	F3	Outdoor ambient temperature sensor error
48	Fo	Recycling refrigerant mode
49	H1	Ordinary defrosting state
50	H4	Overload protection
51	H5	IPM module current protection
52	H7	Compressor out-of-step protection
53	HC	PFC overcurrent protection
54	HE	Compressor demagnetize protection
55	L3	Outdoor fan 1 error

Number	Error code	Error
56	L4	Wired controller power supply circuit poor
57	L5	Wired controller power supply overcurrent protection
58	L6	One control multi-machine endor quantity is inconsistent
59	L7	One control multi-machine endor series is inconsistent
60	LA	Outdoor fan 2 error
61	Lc	Compressor startup failure
62	LE	Compressor overspeed
63	LF	Power protection
64	LP	IDU and ODU unmatched
65	oE	ODU error, for specific error please see the status of ODU main board indicator
66	P0	Driver reset protection
67	P5	Compressor phase over-current protection
68	P6	Master control and driver communication error
69	P7	Module temperature sensor circuit failure
70	P8	Driver module temperature protection
71	P9	AC contractor protection
72	PA	ODU AC current protection
73	Pd	Sensor connect error protection (current sensor is not connected to the corresponding U or V phase)
74	PE	Temperature drift protection
75	PF	Driveboard ambient temperature sensor error
76	PH	Bus high-voltage protection
77	PL	Bus low-voltage protection
78	PP	Input AC voltage error
79	PU	Capacitor charging failure
80	q0	DC indoor fan driver bus low-voltage protection
81	q1	DC indoor fan driver bus high-voltage protection
82	q2	DC indoor fan AC current protection
83	q3	DC indoor fan driver IPM module protection
84	q4	DC indoor fan driver PFC protection
85	q5	DC indoor fan startup failure
86	q6	DC indoor fan Phase-loss protection
87	q7	DC indoor fan driver reset protection
88	q8	DC indoor fan over-current protection
89	q9	DC indoor fan power protection
90	qA	DC indoor fan driver current detection circuit error
91	qb	DC indoor fan out-of-step protection
92	qC	Master control and DC indoor fan driver communication error

Number	Error code	Error
93	qd	DC indoor fan driver module high temperature protection
94	qE	DC indoor fan driver module temperature sensor error
95	qF	DC indoor fan driver memory chip error
96	qH	DC indoor fan driver charge loop error
97	qL	DC indoor fan driver input AC voltage error protection
98	qo	DC indoor fan driver electrical box temperature sensor error
99	qp	DC indoor fan driver AC input zero-crossing protection
100	U1	Compressor phase current circuit detection error
101	U2	Compressor phase-loss and anti-phase protection
102	U3	DC bus voltage drop error
103	U5	Overall current detection failure
104	U7	4–way valve switch-over error
105	U8	Zero-crossing protection
106	UL	Outdoor fan overcurrent protection
107	Uo	Outdoor ambient temperature abnormal(Temperature high opening heat mode or temperature over low open refrigeration mode)

If malfunction occurs during operation, LCD temperature display zone will show the failure information. If several malfunctions occur at the same time, their corresponding error codes will be shown in turn. When malfunction occurs, please shut off the unit and send for professional personnel to repair. For example, E0 (as shown below) indicates Indoor Fan Error.

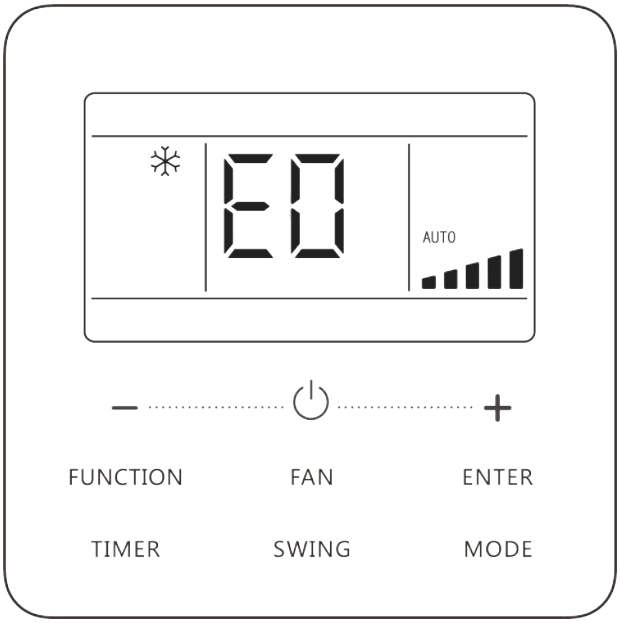

3.4 Troubleshooting

3.4.1 “E0” Indoor Fan Error

Error display: IDU wired controller and IDU receiver light board will display E0.

Error judgment condition and method:

Check if the rotation speed of IDU is too slow, or it stops rotation, or protection signal of outdoor fan is transferred. If yes, it is judged that indoor fan protection occurs.

Possible reason:

■Motor stops operation or it is blocked;

■IDU mainboard is abnormal.

Troubleshooting:

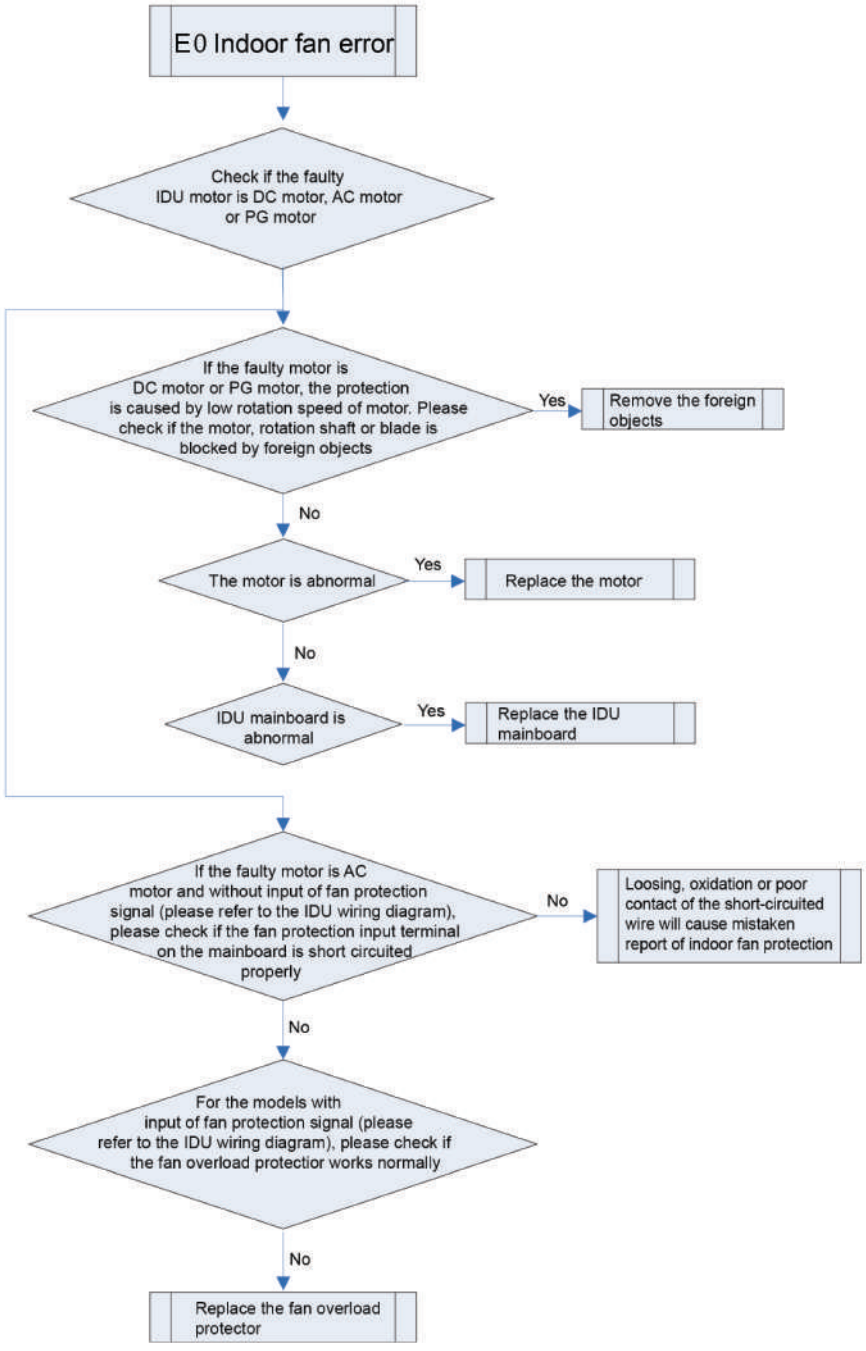

3.4.2 “E1” Compressor High Pressure Protection

Error display: ODU mainboard, IDU wired controller and IDU receiver light board will display E1.

Error judgment condition and method:

It is judged through the action of high pressure switch. If the high pressure switch is cut off, it is judged that high pressure is too high and the system stops operation for protection.

Possible reason:

■Cut-off valve of ODU is not fully opened;

■High pressure switch is abnormal;

■Outdoor or indoor fan is not working properly;

■IDU filter or air duct is blocked (heating mode);

■Ambient temperature is too high;

■Refrigerant charging amount is too much;

■System pipeline is blocked.

Troubleshooting:

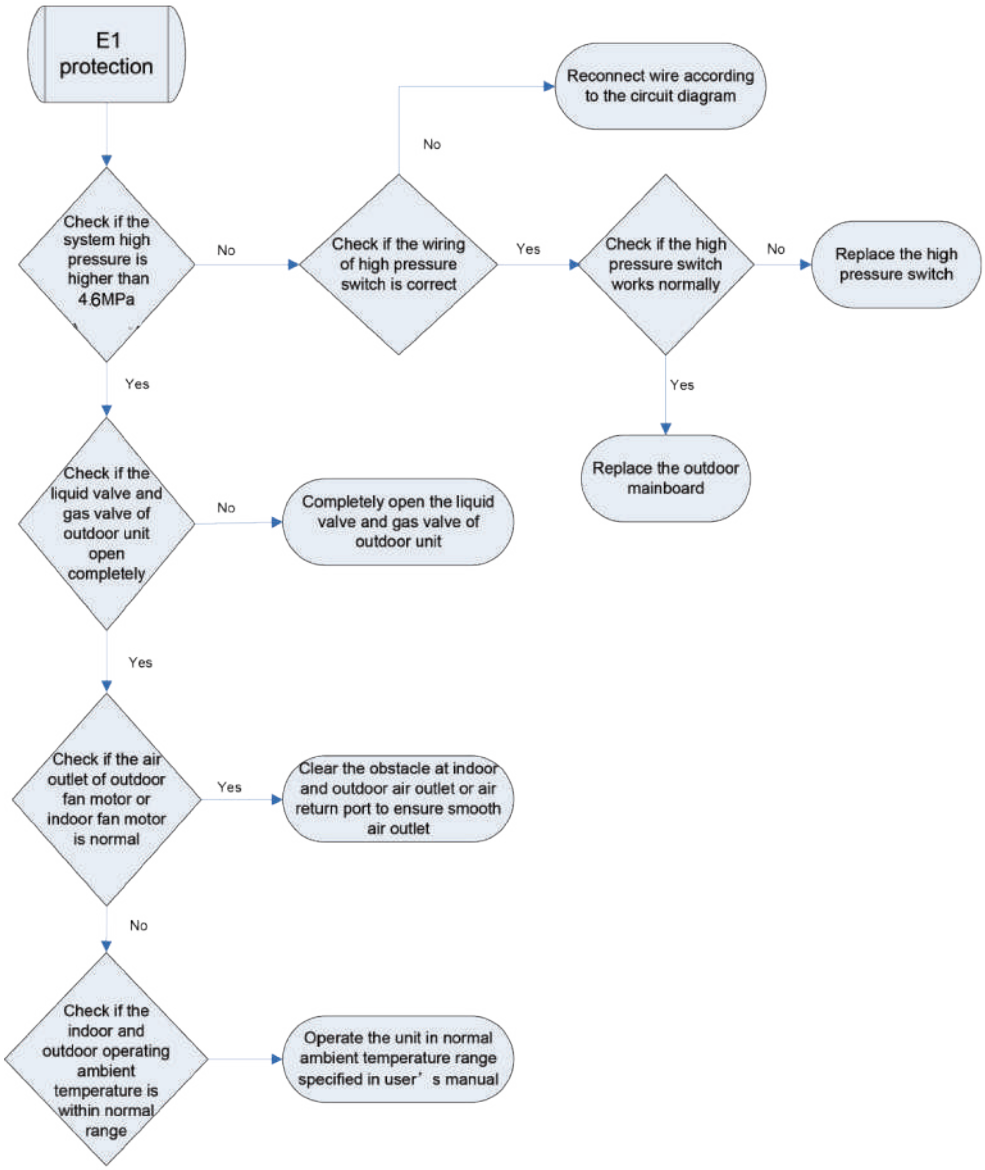

3.4.3 “E2” Indoor Anti-Freezing Protection

Error display: IDU wired controller and IDU receiver light board will display E2.

Error judgment condition and method:

Check IDU evaporator pipe temperature. When evaporator pipe temperature is too low, freeze protection will be activated to prevent freezing damage of evaporator.

Possible reason:

■IDU filter and evaporator are dirty;

■IDU motor is blocked;

■Refrigerant amount is insufficient;

■Ambient temperature of IDU and ODU is too low.

Troubleshooting:

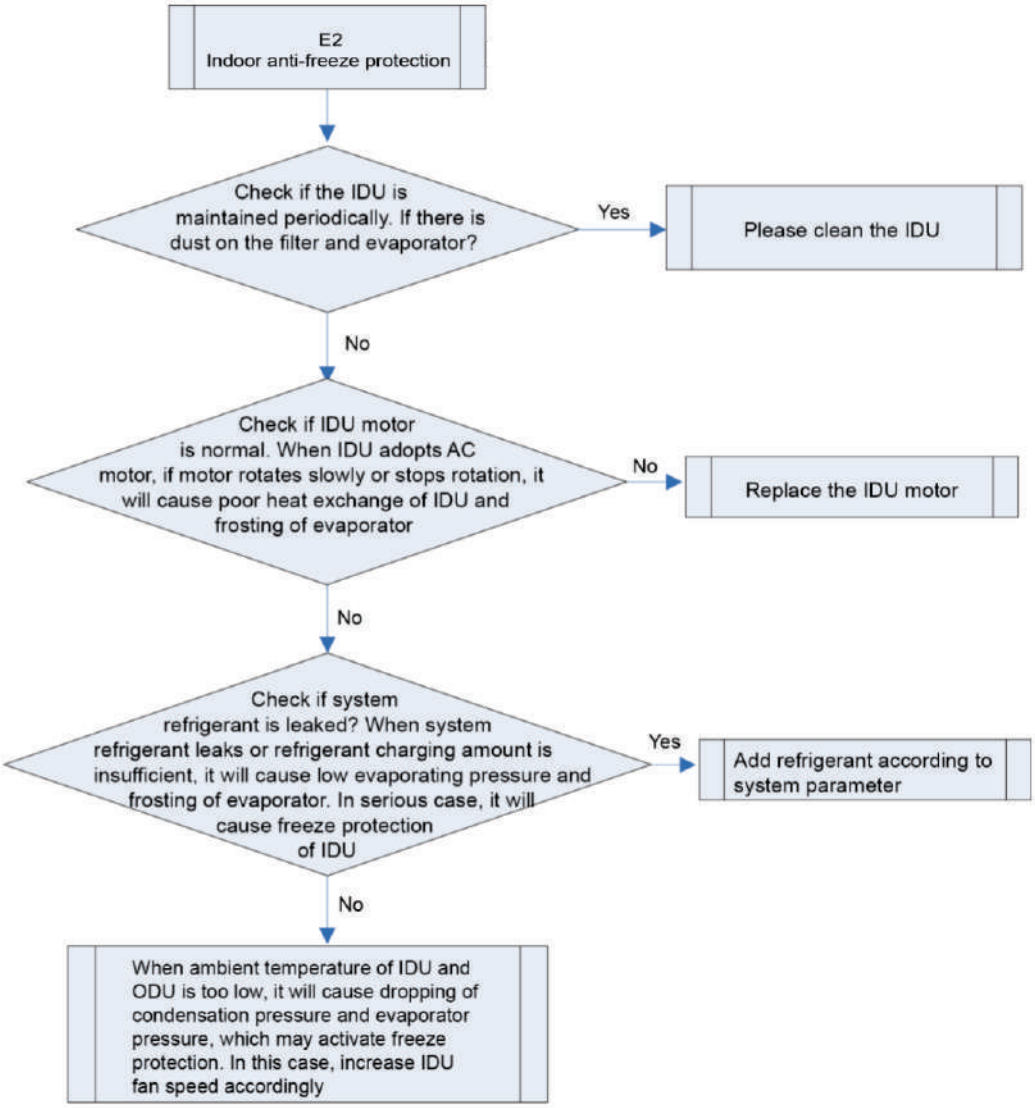

3.4.4 “E3” Compressor Low-pressure Protection, Refrigerant Lacking Protection, Refrigerant Recovery Mode

Error display: ODU mainboard, IDU wired controller and IDU receiver light board will display E3

Compressor Low-pressure Protection Error judgment condition and method:

It is judged through the action of low pressure switch. If the low pressure switch is cut off, it is judged that low pressure is too low and the system stops operation for protection.

“E3”Possible reason:

■Cut-off valve of ODU is not fully opened;

■Low pressure sensor is abnormal;

■Outdoor or indoor fan is not working properly;

■IDU filter or air duct is blocked (cooling mode);

■Ambient temperature is too low;

■Refrigerant charging amount is insufficient;

■System pipeline is blocked;

Troubleshooting:

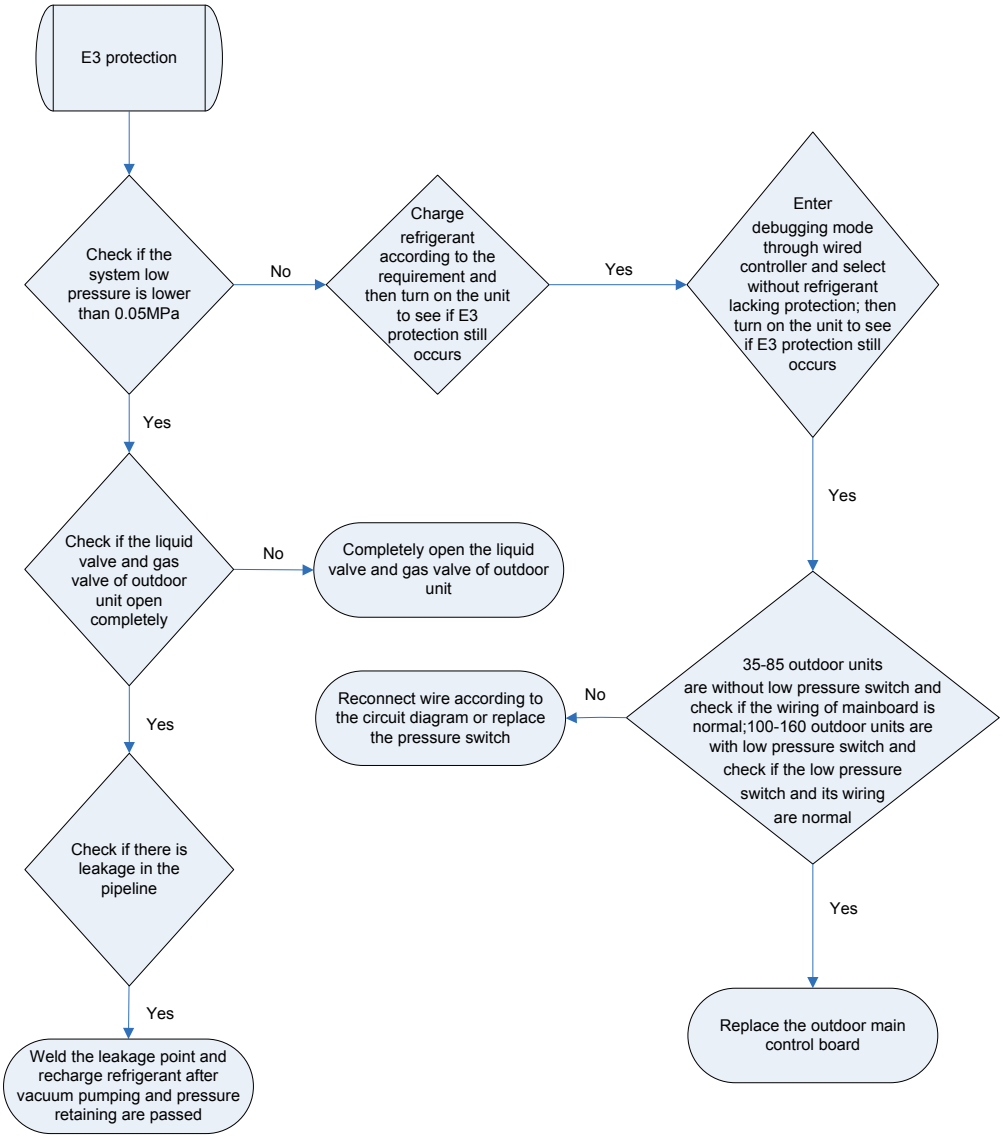

3.4.5 “E4” Compressor Air Discharge High-temperature Protection

Error display: ODU mainboard, IDU wired controller and IDU receiver light board will display E4

Error judgment condition and method:

Test the compressor discharge temperature through compressor discharge pipe. If the tested temperature value is higher than 115℃, the unit will stop for protection.

Possible reason:

■Cut-off valve of ODU is not fully opened;

■Electronic expansion valve is abnormal;

■Outdoor or indoor fan is not working properly;

■IDU filter or air duct is blocked (cooling mode);

■Ambient temperature exceeds allowable operation range;

■Refrigerant charging amount is insufficient;

■System pipeline is blocked;

Troubleshooting:

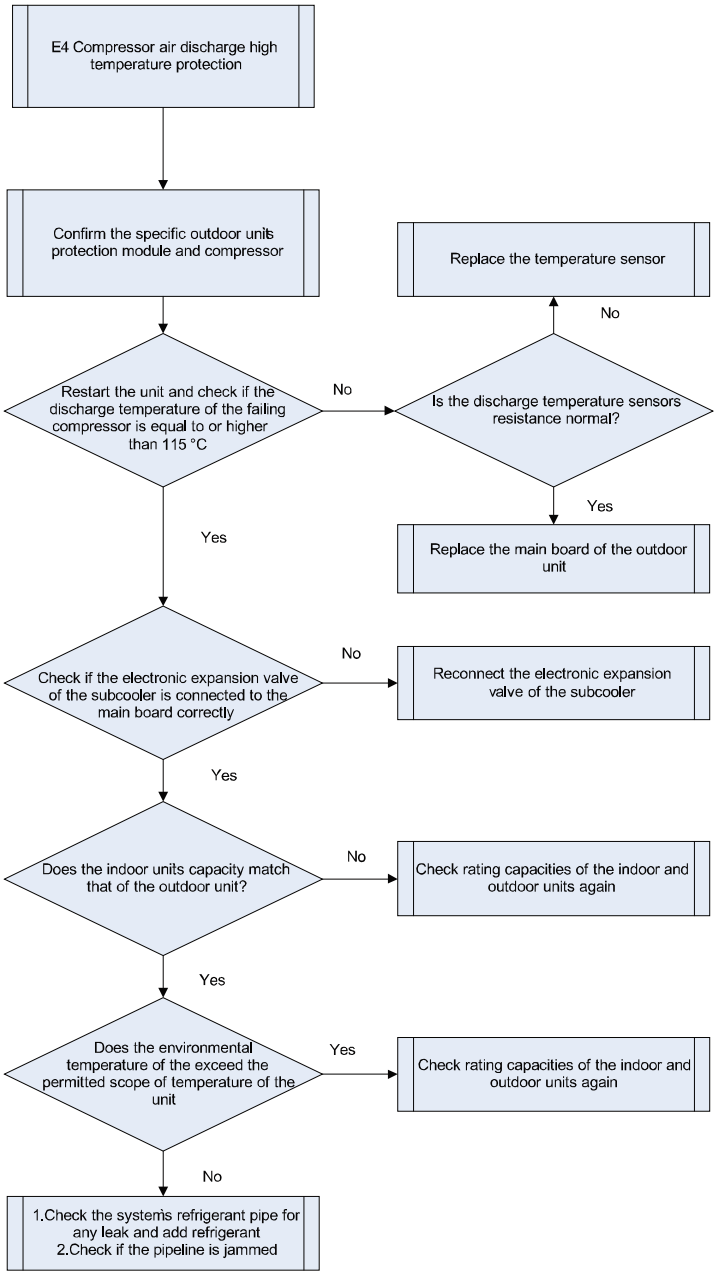

3.4.6 “E6” Communication Error

Error display: ODU mainboard, IDU wired controller and IDU receiver light board will display E6

Error judgment condition and method:

If no communication between ODU and IDU in continuously 180s, this error will be reported.

Possible reason:

■Communication wire is connected improperly or loose.

■Communication wire is cut off

■Communication wire is in poor connection

■Controller is abnormal

Troubleshooting:

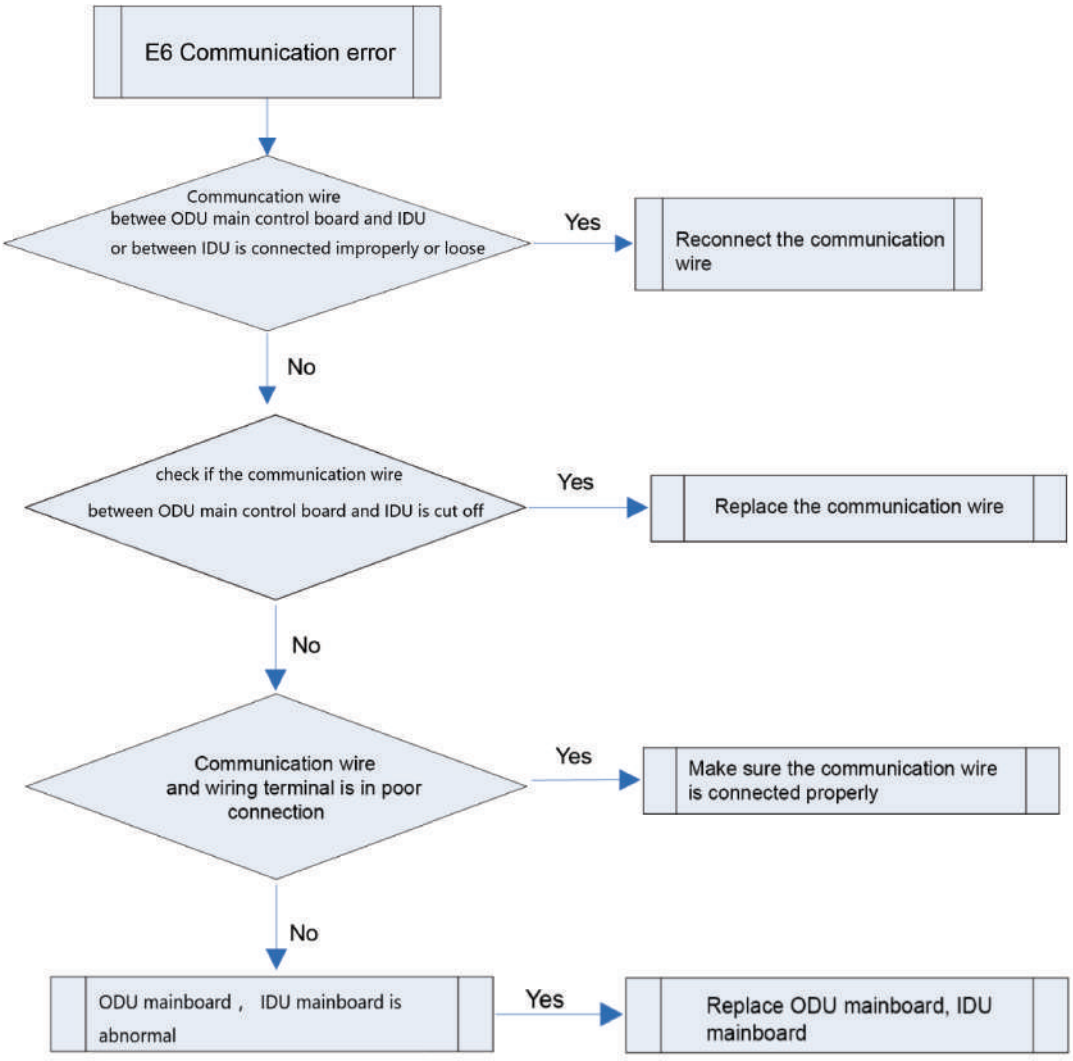

3.4.7 “E9” Water Overflow Protection

Error display: IDU wired controller and IDU receiver light board will display E9

Error judgment condition and method:

Check the status of IDU float switch. When water level is too high, float switch is activated, so water full protection happens.

Possible reason:

■IDU is installed improperly

■Drainage pump is broken

■Float switch operates abnormally

■IDU mainboard is abnormal;

Troubleshooting:

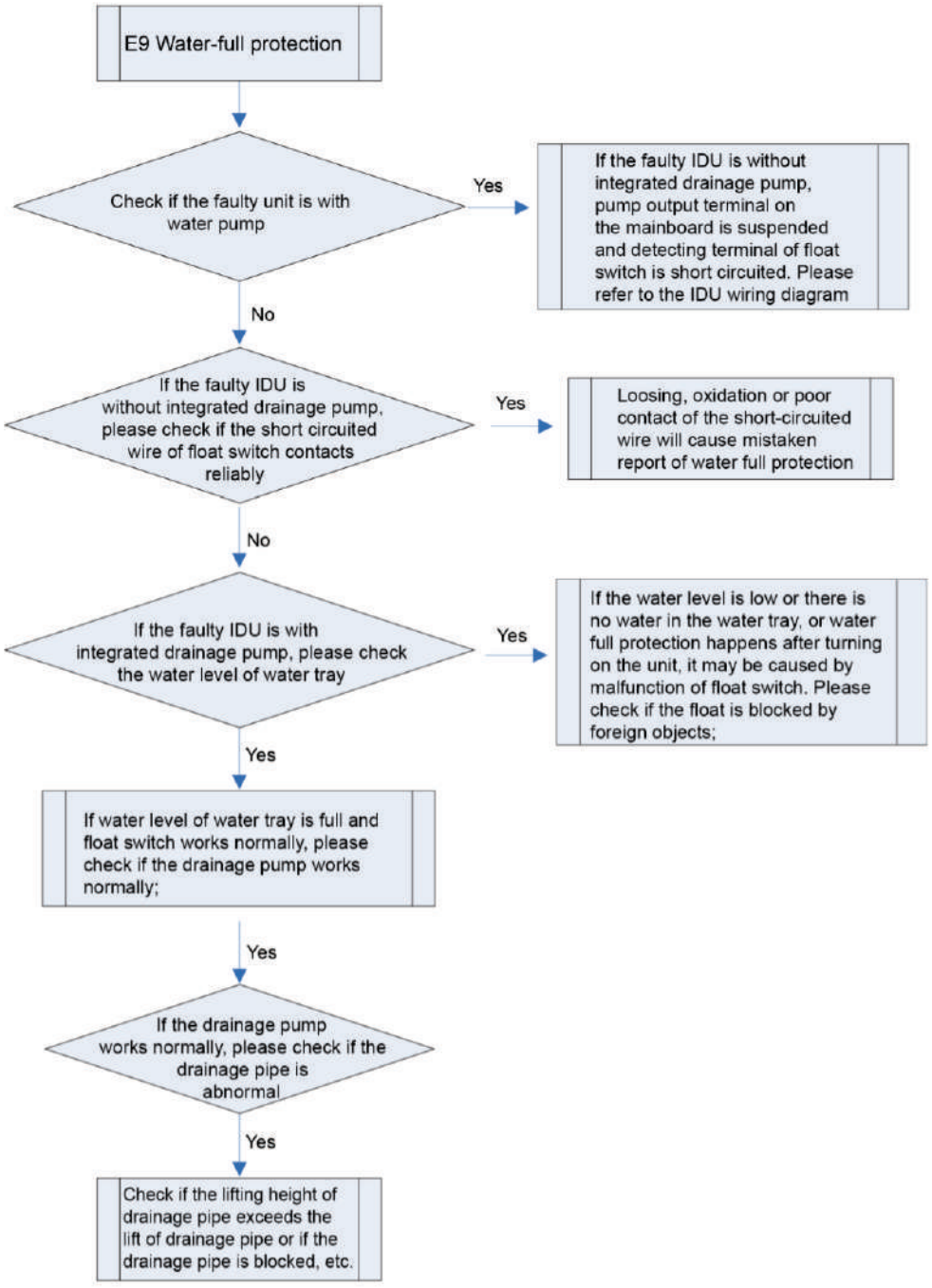

3.4.8 “C6” Discharge Temperature Sensor Error

Error display: ODU mainboard, IDU wired controller and IDU receiver light board will display C6

Error judgment condition and method:

① Sample the AD value of temperature sensor through temperature sensor detecting circuit and

judge the range of AD value, If the sampling AD value exceeds upper limit and lower limit in 5 seconds continuously, report the error.

② Compare the discharge temperature after the compressor has just started running and after 10 minutes of operation, if the temperature is not changed, report the error.

Possible reason:

■Poor contact between temperature sensor and terminal in mainboard interface;

■Poor contact between temperature sensor and compressor discharge pipe;

■Temperature sensor is abnormal;

■Detecting circuit is abnormal.

Troubleshooting:

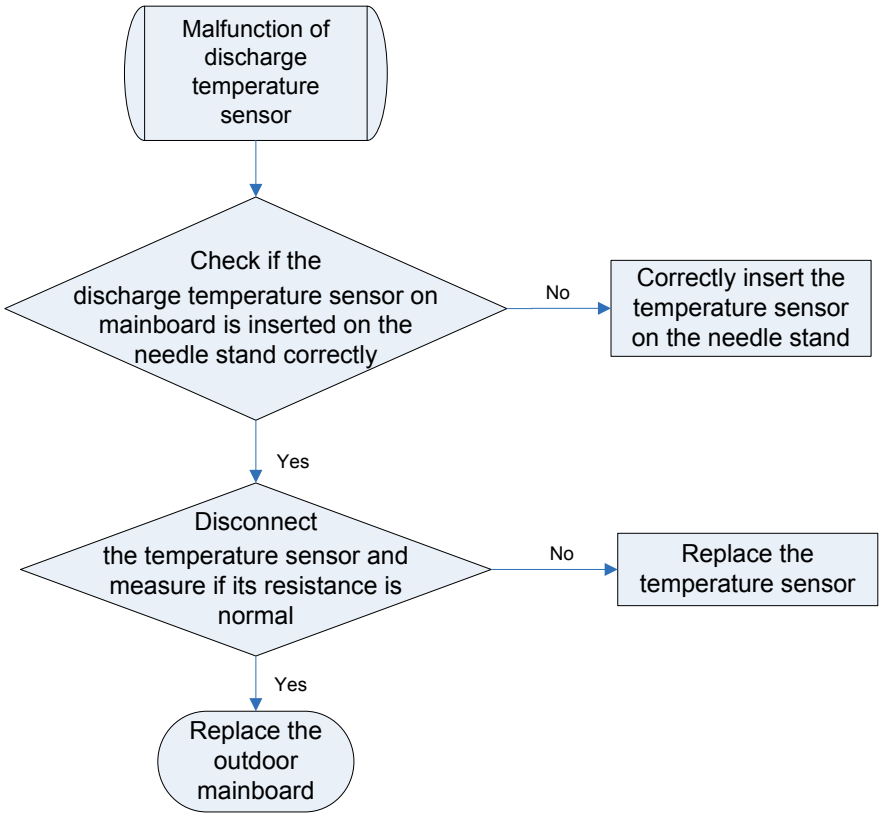

Note: Please refer to Appendix 1 for the relation between temperature and resistance of temperature sensor.

3.4.9 “F3” Outdoor Ambient Temperature Sensor Error

Error display: ODU mainboard, IDU wired controller and IDU receiver light board will display F3

Error judgment condition and method:

Sample the AD value of temperature sensor through temperature sensor detecting circuit and judge the range of AD value, If the sampling AD value exceeds upper limit and lower limit in 5 seconds continuously, report the error.

Possible reason:

■Poor contact between ambient temperature sensor and terminal in mainboard interface

■Ambient temperature sensor is abnormal

■Detecting circuit is abnormal

Troubleshooting:

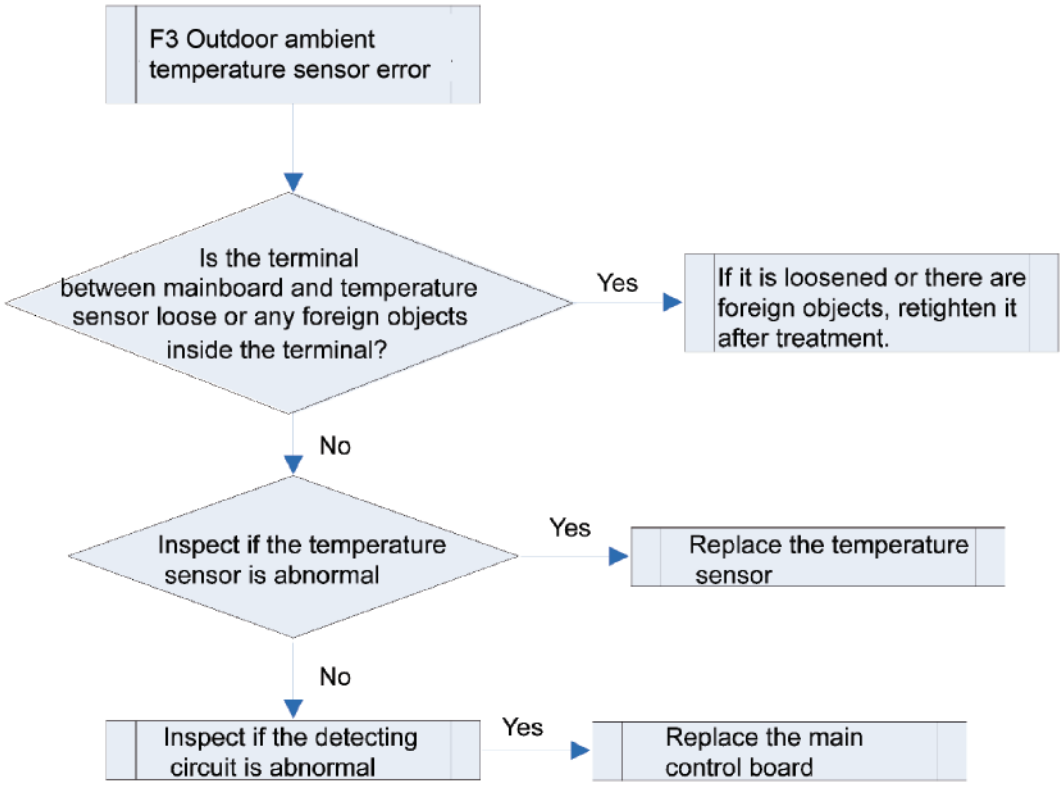

Note: Please refer to Appendix 1 for the relation between temperature and resistance of temperature sensor.

3.4.10 "CE" Wired Controller Temperature Sensor Error

Error display: IDU wired controller and IDU receiver light board will display CE

Error judgment condition and method:

Sample the AD value of temperature sensor through temperature sensor detecting circuit and judge the range of AD value, If the sampling AD value exceeds upper limit and lower limit in 5 seconds continuously, report the error.

Possible reason:

■Poor contact between temperature sensor and terminal in mainboard interface

■Temperature sensor is abnormal

■Detecting circuit is abnormal

Troubleshooting:

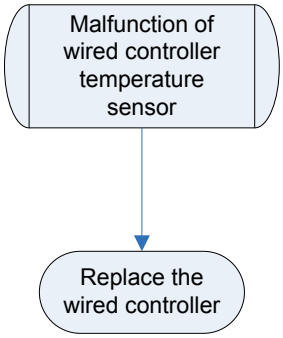

3.4.11 “CJ” IDU Jumper Cap Error

Error display: IDU wired controller and IDU receiver light board will display CJ

Error judgment condition and method:

If jumper cap model doesn’t match with mainboard, this error will be reported.

Possible reason:

■Jumper cap is not installed.

■Jumper cap model is wrong.

■Detecting circuit is abnormal.

Troubleshooting:

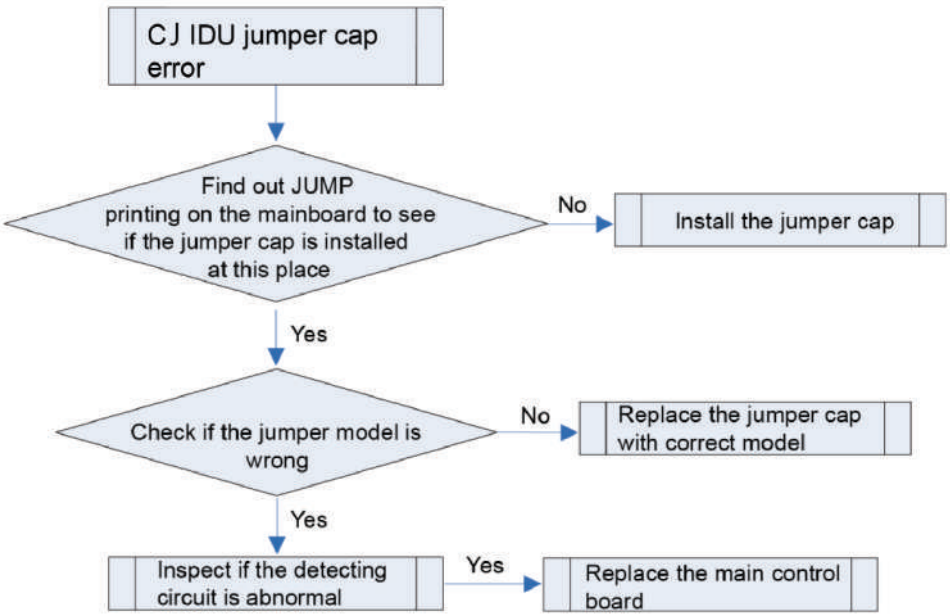

3.4.12 “H4” Overload

Error display: ODU mainboard, IDU wired controller and IDU receiver light board will display H4

Error judgment condition and method:

When tube temperature is higher than the protection value, system will report overload protection.

Possible reason:

■Cooling ODU heat exchanger is blocked or heat exchange is bad.

■Heating IDU heat exchanger is blocked or heat exchange is bad.

■Operating temperature is too high.

■System charging quantity is too much.

Troubleshooting:

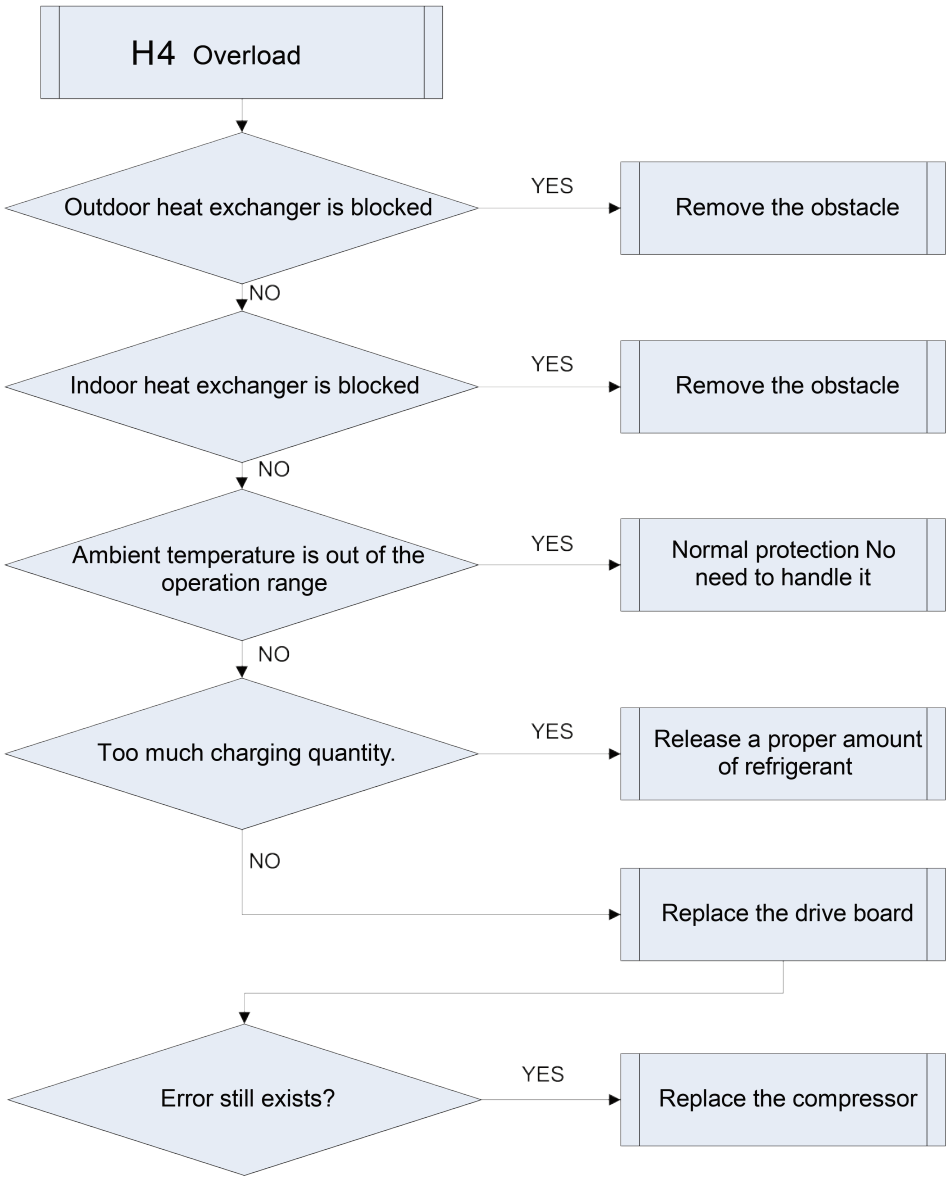

3.4.13 “H5” IPM Protection

Error display: ODU mainboard, IDU wired controller and IDU receiver light board will display H5

Error judgment condition and method:

When power is connected and drive chip received IPM lead F0 that is of low level, than it is IPM module malfunction. System will shut down for protection.

Possible reason:

■Compressor 3-phase wire connection is lack of phase or phase-reversed.

■System is overloaded and compressor current is too large.

■Drive board IPM module is damaged.

■Drive board IPM module’s 15V power supply is lower than 13.5V.

■Drive board 6-line PWM signal and the corresponding element are abnormal.

■Drive board compressor current sampling circuit element is damaged or drive chip current sampling AD terminal is abnormal.

■Compressor is damaged.

Troubleshooting:

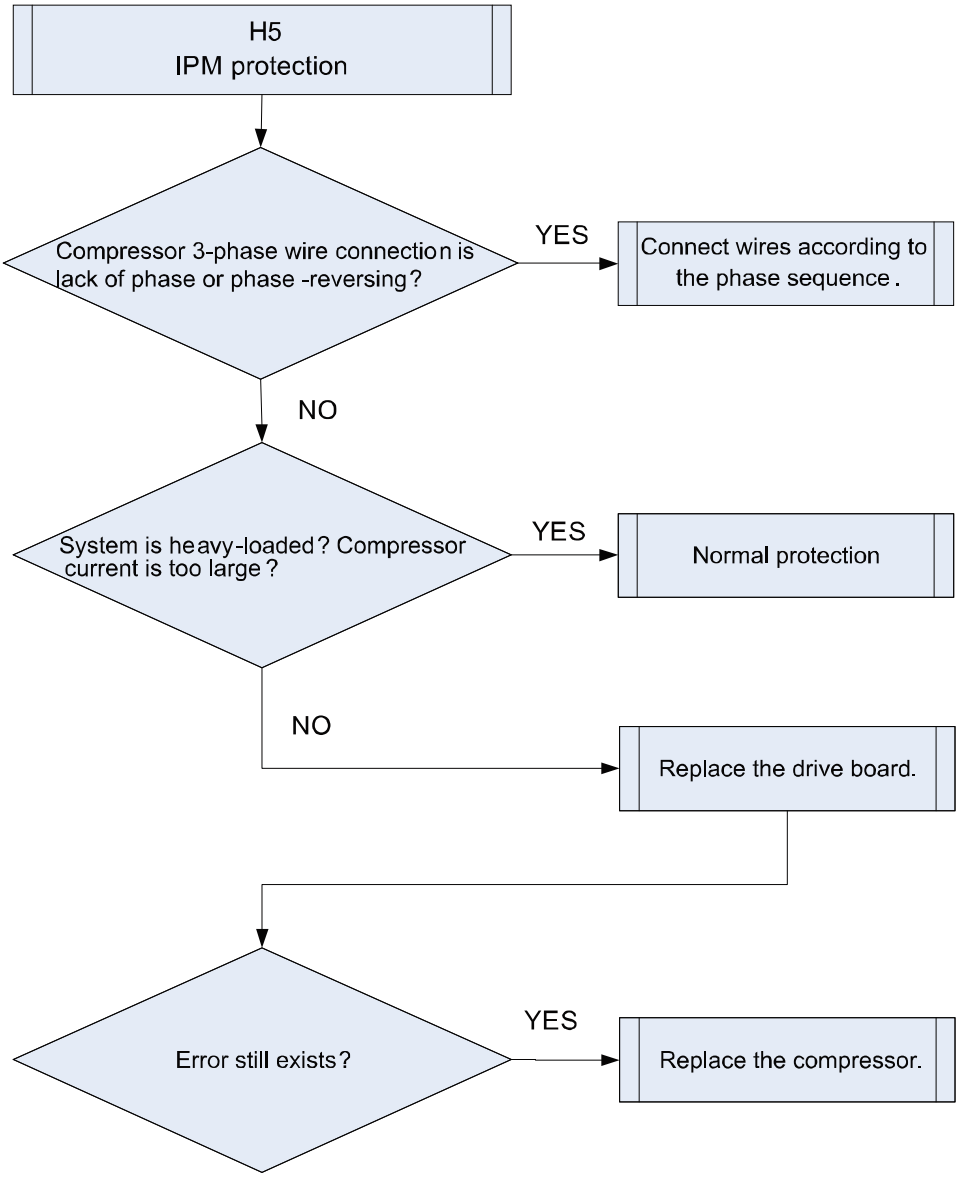

3.4.14 “HC” PFC Protection

Error display: ODU mainboard, IDU wired controller and IDU receiver light board will display HC

Error judgment condition and method:

After power is connected, and drive chip received PFC lead F0 that is of low level, than it is PFC module malfunction. System will shut down for protection.

Possible reason:

■Power grid voltage is abnormal.

■Drive board PFC module is damaged.

■Drive board PFC module’s 15V power supply is lower than 13.5V.

■Drive board PWM signal for PFC and the corresponding element are abnormal.

■Drive board PFC current sampling circuit element is damaged or drive chip current sampling AD terminal is abnormal.

Troubleshooting:

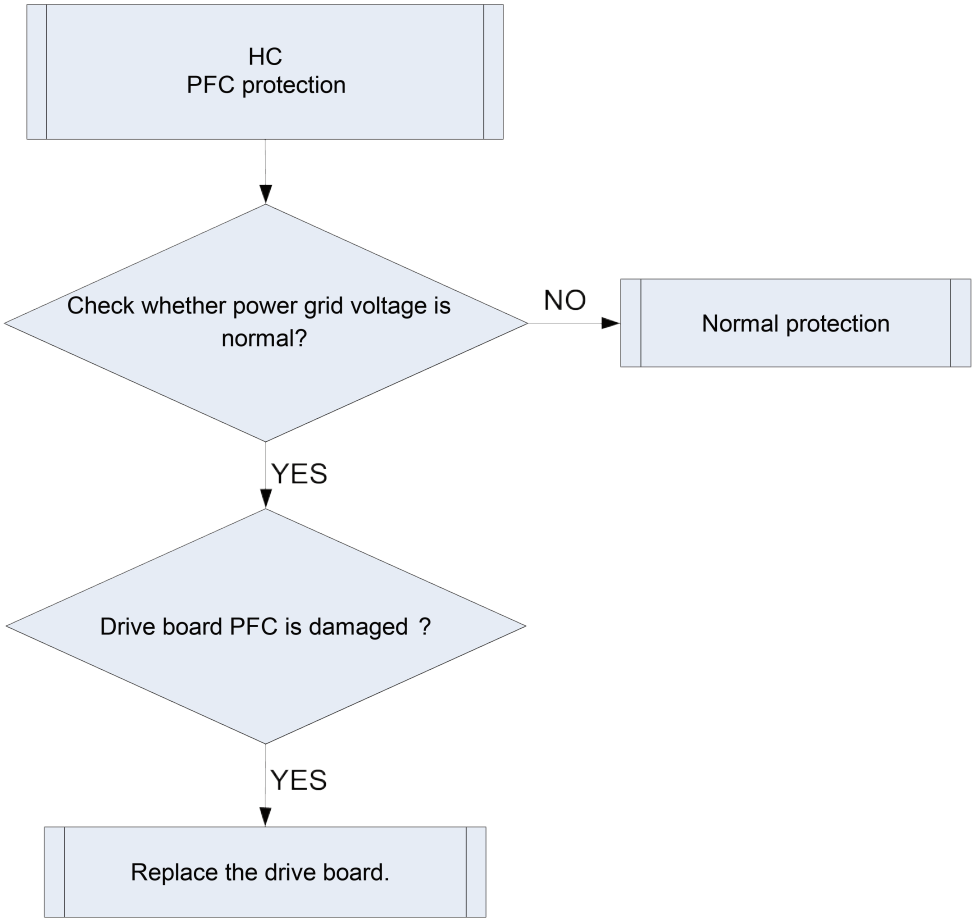

3.4.15 “Lc” Startup Failure

Error display: ODU mainboard, IDU wired controller and IDU receive light board will display Lc.

■Poor contact of compressor UVW wire;

■Compressor is broken;

■Compressor drive board is broken.

Troubleshooting:

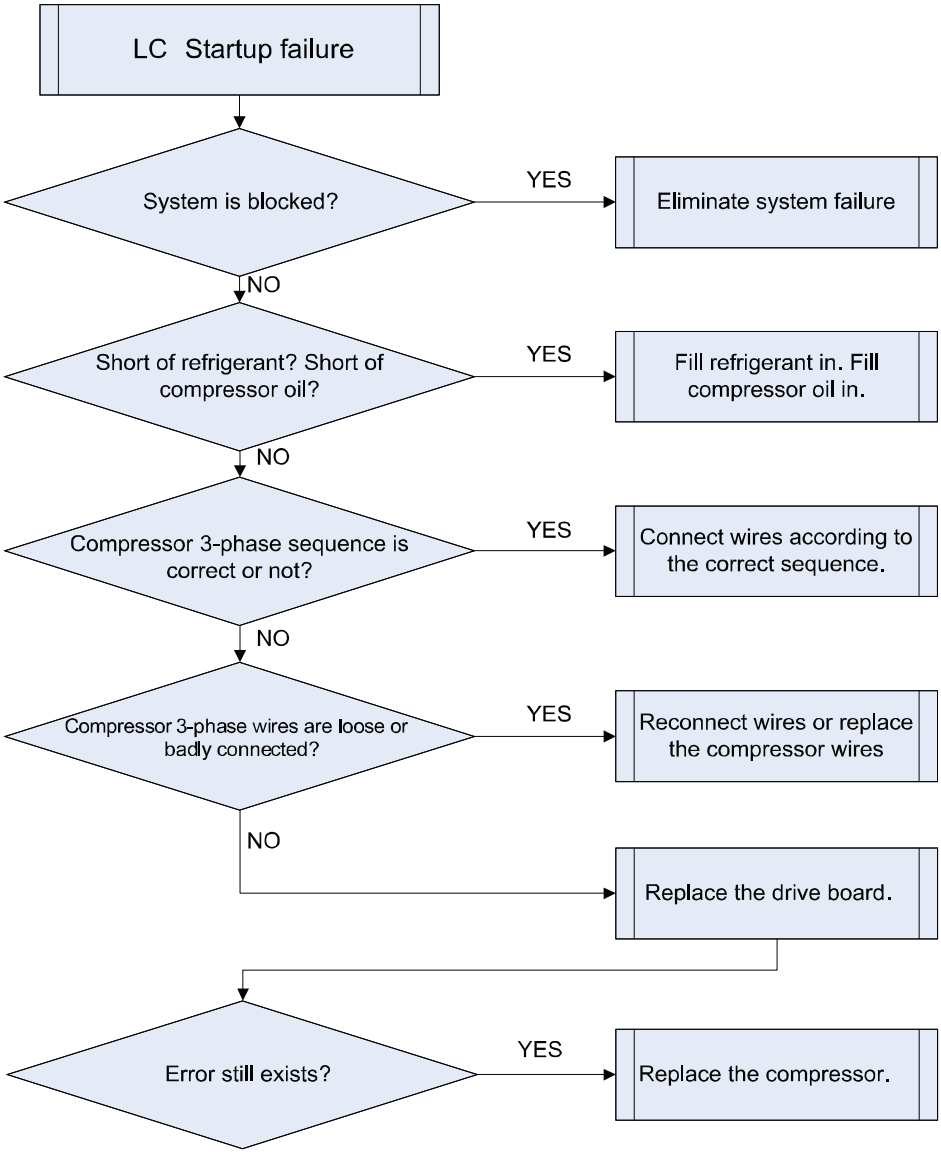

3.4.16 “U7” 4–Way Valve Switch-Over Error

Error display: ODU mainboard, IDU wired controller and IDU receiver light board will display U7

Possible reason:

■Voltage is abnormal. For example, low voltage will cause abnormal direction change of the 4-way valve.

■Pilot valve holder hole or the capillary tube is blocked, which has caused small flow or no flow.

■Capillary tube is blocked when connecting to the pilot valve or main valve.

■Coil is not power-connected, or is open-circuited. Voltage is low, or the contact between turns or terminals is bad.

■The stainless steel cover of pilot valve is damaged, or the steel core is stuck, or the spring is not elastic.

■Insert block is bent or not elastic, so the little slide cannot get in place.

■When adding refrigerant, the little slide is over-running and can’t spring back.

Troubleshooting：

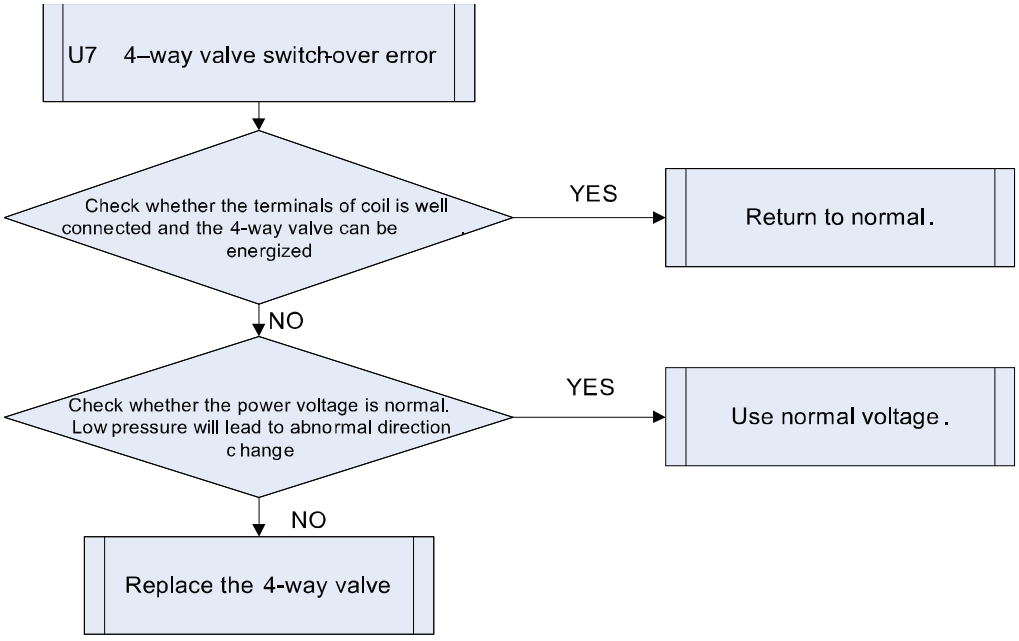

3.4.17 “qC” Master Control and Driver Communication Error

Error display: IDU wired controller and IDU receiver light board will display qC

Error judgment condition and method:

If there is no other malfunction and the communication between master control and driver is cut off for 30s, then it can be judged that the communication between master control and driver is faulted. System will shut down for protection.

Possible reason:

■Communication wire between master control and driver is not well connected, or has bad contact, or is broken.

■The switch power of drive board is abnormal, therefore, the 3.3V power voltage is abnormal.

■Communication circuit of the drive board or the master control board is abnormal.

Troubleshooting：

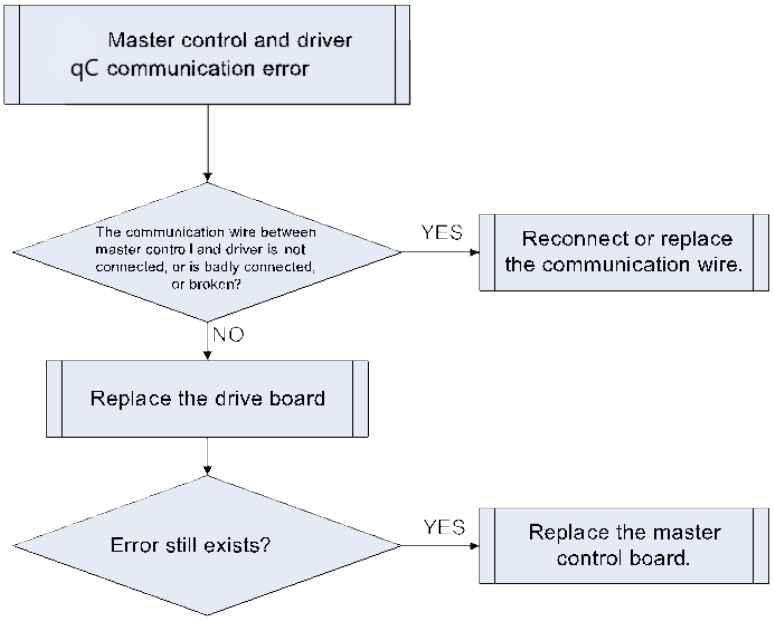

3.4.18 “PA” AC Current Protection

Error display: ODU mainboard, IDU wired controller and IDU receiver light board will display PA

Error judgment condition and method:

If input current value exceeds the set protection value, then it can be judged that AC current protection occurs and system will shut down for protection.

Possible reason:

■System is heavy-loaded and compressor current is too large.

■Grid voltage is abnormal.

■PFC module is damaged.

■Drive board PFC current sampling circuit element is damaged or drive chip PFC current sampling AD terminal is abnormal.

Troubleshooting:

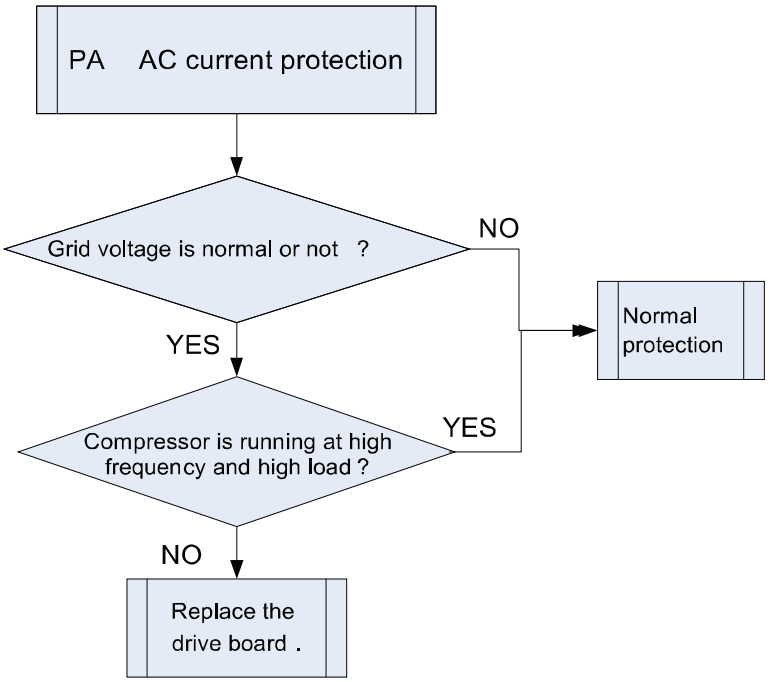

3.4.19“PL” Bus Low-Voltage Protection

Error display: ODU mainboard, IDU wired controller and IDU receiver light board will display PL

Error judgment condition and method:

When compressor is running and there is no other malfunction, if busbar voltage is lower than the set value for low voltage protection, then it can be judged that bus low-voltage protection occurs. System will shut down for protection.

Possible reason:

■Voltage of power grid is abnormal.

■Drive board busbar voltage sampling circuit element is damaged or drive board busbar voltage sampling AD terminal is abnormal.

Troubleshooting:

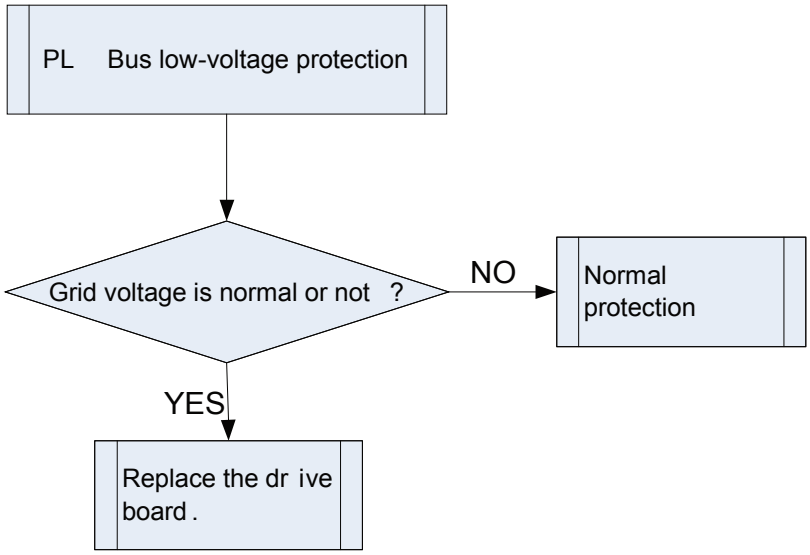

3.4.20 “PH” Bus High-Voltage Protection

Error display: ODU mainboard, IDU wired controller and IDU receiver light board will display PH

Error judgment condition and method:

If there is no other malfunction and the busbar voltage is higher than the set value for high voltage protection, then it can be judged that bus high-voltage protection occurs. System will shut down for protection.

Possible reason:

■Voltage of power grid is abnormal.

■Drive board busbar voltage sampling circuit element is damaged or drive board busbar voltage sampling AD terminal is abnormal.

Troubleshooting:

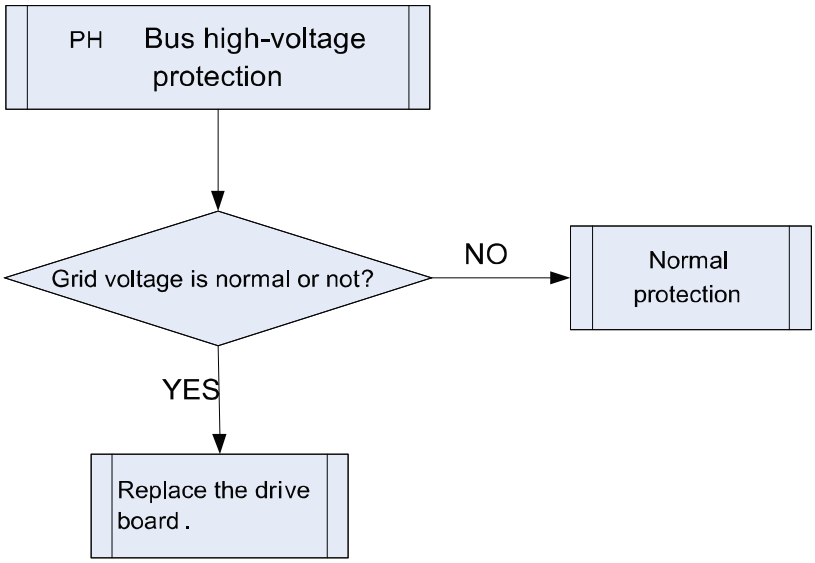

3.4.21 “C8” ODU Driver Jumper Cap Error

Error display: ODU mainboard, IDU wired controller and IDU receiver light board will display C8

Error judgment condition and method:

If jumper cap model doesn’t match with driver, report the error

Possible reason:

■Driver Jumper cap is not installed

■Driver Jumper cap model is wrong

■Detecting circuit is abnormal

Troubleshooting:

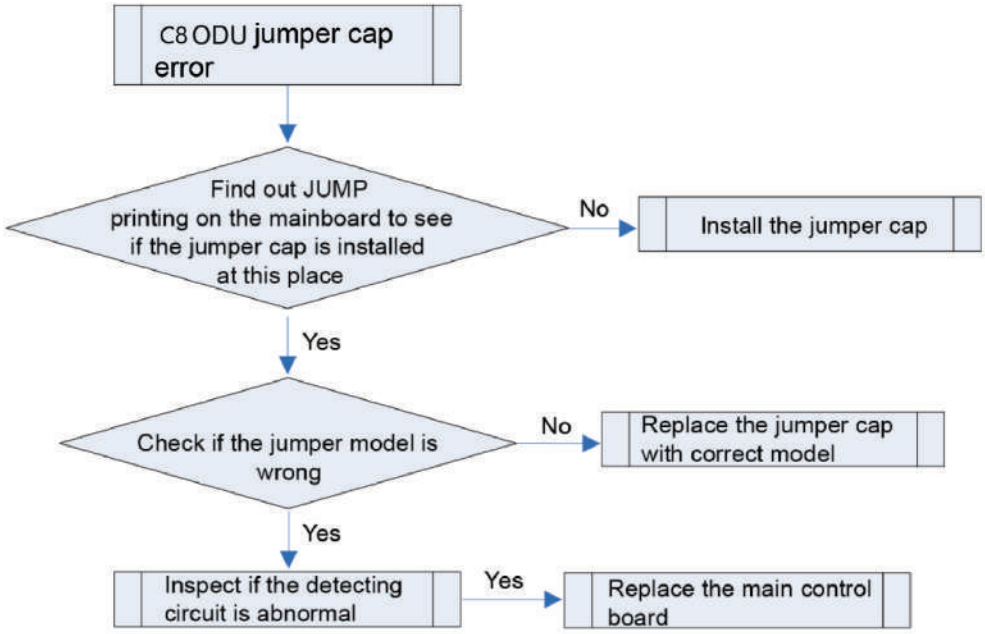

3.4.22 “EL” Emergency Stop (Fire Alarm)

If fire alarm terminal is enabled after the IDU mainboard connects to function expansion panel, error EL will be reported.

3.5 Failures Not Caused by Errors

(1) If your air conditioner fails to function normally, please first check the following items before maintenance:

Problem	Cause	Corrective measure
The air conditioner can't run.	If you turn off the unit and then immediately turn it on, in order to protect the compressor and avoid system overload, compressor will delay running for 3min.	Please wait for a while.
	Wire connection is wrong.	Connect wires according to the wiring diagram.
	Fuse or circuit breaker is broken.	Replace the fuse or switch on the circuit breaker.
	Power failure.	Restart after power is resumed.
	Power plug is loose.	Re-insert the power plug.
	Remote controller has low battery.	Replace the batteries.
Bad cooling or heating effect.	Air inlet and outlet of indoor or outdoor units have been blocked.	Clear the obstacles and keep the room for indoor and outdoor units well ventilated.
	Improper temperature setting.	Reset a proper temperature.
	Fan speed is too low.	Reset a proper fan speed.
	Air flow direction is not right.	Change the direction of air louvers.
	Doors or windows are open.	Close them.
	Exposed under direct sunshine.	Put on curtains or louvers in front of the windows.
	Too many heat sources in the room.	Remove unnecessary heat sources.
	Filter is blocked or dirty.	Send for a professional to clean the filter.
	Air inlets or outlets of the units are blocked.	Clear away obstacles that are blocking the air inlets and outlets of indoor and outdoor units.

(2) The following situations are not operation failures.

Phenomenon	Time of occurrence	Cause
Mist comes from the air conditioner.	During operation.	If the unit is running under high humidity, the wet air in the room will be quickly cooled down.
The air conditioner generates some noise.	System switches to heating mode after defrosting.	Defrosting process will generate some water, which will turn to water vapor.
	The air conditioner is buzzing at the beginning of operation.	Temperature controller will be buzzing when it starts working. The noise will become weak 1min later.
Dust comes from the air conditioner.	When the unit is turned on, it purrs.	When the system is just started, the refrigerant is not stable. About 30s later, the purr of the unit becomes low.
	About 20s after the unit first enables the heating mode or there is refrigerant brushing sound when defrosting under heating.	It's the sound of 4-way valve switching direction. The sound will disappear after the valve changes its direction.
	There is hissing sound when the unit is started or stopped and a slight hissing sound during and after operation.	It's the sound of gaseous refrigerant that stops flowing and the sound of drainage system.
	There is a sound of crunching during and after operation.	Because of temperature change, front panel and other components may be swelled up and cause abrasion sound.
	There is a hissing sound when the unit is turned on or suddenly stopped during operation or after defrosting.	Because refrigerant suddenly stops flowing or changes the flow direction.
	The unit starts operation after being unused for a long time.	Dust inside the indoor unit comes out together with the air.
The air conditioner generates some smell.	During operation.	The room smell or the smell of cigarette comes out through the indoor unit.

NOTICE:

Check the above items and adopt the corresponding corrective measures. If the air conditioner continues to function poorly, please stop the air conditioner immediately and contact Sinclair's authorized local servicecenter. Ask our professional service staff to check and repair the unit.

4. Maintenance

4.1 System Diagram

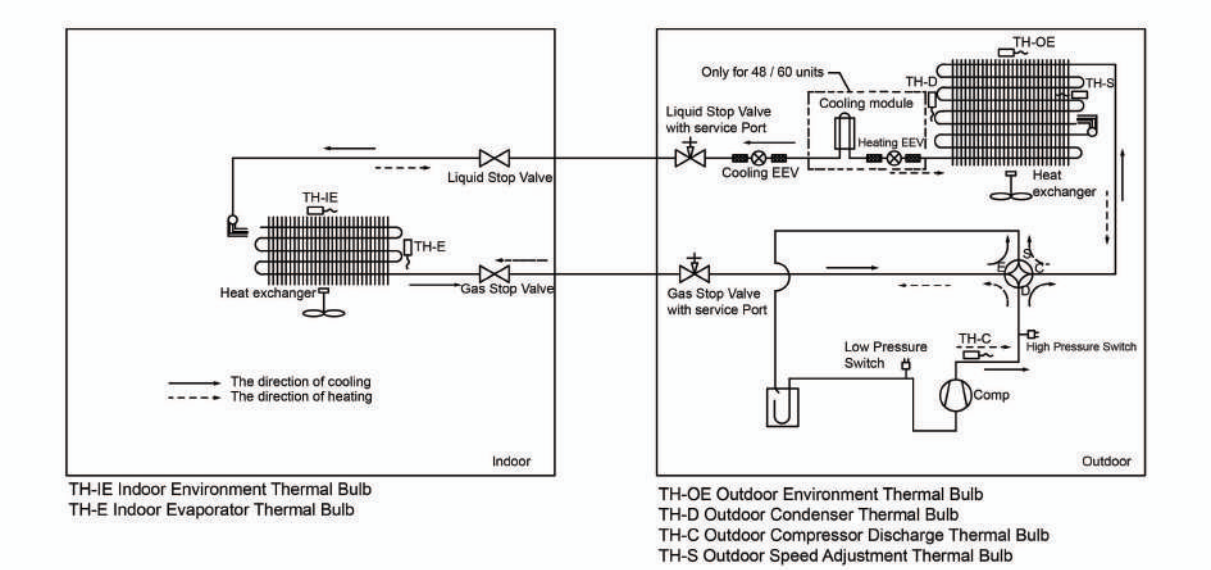

TH-IE Indoor Environment Thermal Bulb
TH-E Indoor Evaporator Thermal Bulb

TH-OE Outdoor Environment Thermal Bulb
TH-D Outdoor Condenser Thermal Bulb
TH-C Outdoor Compressor Discharge Thermal Bulb
TH-S Outdoor Speed Adjustment Thermal Bulb

NOTE:

The Motherboard Cooling Module only for ASGE-48BI2 and ASGE-60BI2 units

The Pressure switch only for ASGE-36÷60BI2 units

4.2 Connection Pipe Vacuum Pumping

NOTICE
Make sure the outlet of vacuum pump is away from fire source and is well-ventilated.

(1) Remove the caps of the liquid valve, gas valve and also the service port.

(2) meanwhile the gas and liquid valves should be kept closed in case of refrigerant leak.

(3) Connect the hose used for evacuation to the vacuum pump.

(4) Open the switch at the lower pressure side of the manifold valve assembly and start the vacuum pump. Meanwhile, the switch at the high pressure side of the manifold valve assembly should be kept closed, otherwise evacuation would fail.

(5) The evacuation duration depends on the unit's capacity, generally.

Model	Time(min)
ASGE-12BI2, ASGE-18BI2	20
ASGE-24BI2, ASGE-30BI2, ASGE-36BI2, ASGE-36BI2-3	30
ASGE-42BI2, ASGE-42BI2-3, ASGE-48BI2, ASGE-48BI2-3, ASGE-60BI2-3	45

And verify if the pressure gauge at the low pressure side of the manifold valve assembly reads -0.1MPa (-750mmHg), if not, it indicates there is leak somewhere. Then, close the switch fully and then

stop the vacuum pump.

(1) Wait for 10min to see if the system pressure can remain unchanged. If the pressure increase, there may be leakage.

(2) Slightly open the liquid valve and let some refrigerant go to the connection pipe to balance the pressure inside and outside of the connection pipe, so that air will not come into the connection pipe when removing the hose. Notice that the gas and liquid valve can be opened fully only after the manifold valve assembly is removed.

(3) Place back the caps of the liquid valve, gas valve and also the service port.

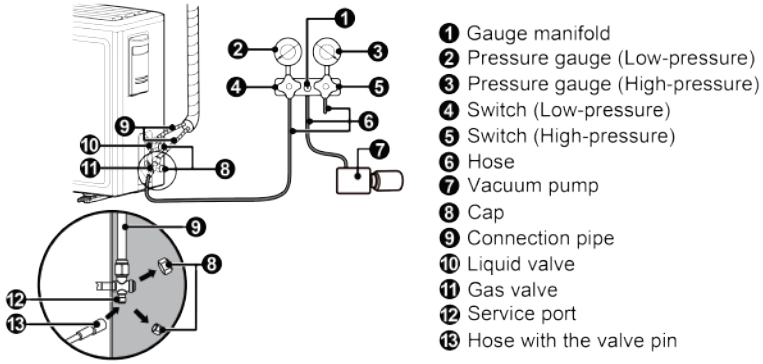

NOTICE:

For large-size units, there are maintenance ports for liquid valve and gas valve. During evacuation, you may connect the two hoses of the branch valve assembly to the maintenance ports to speed up the evacuation.

Refrigerant should be reclaimed into the appropriate storage tank. System should use oxygen-free nitrogen purging to ensure safety. This process may need to repeat several times. Do not use compressed air or oxygen in this process.

4.3 Refrigerant Charging

Pre-charging

Step 1: Connect the high pressure gauge line to the valve of liquid pipe and connect the low pressure gauge line to the valve of gas pipe. Connect the middle gauge line to the vacuum pump. Power on the vacuum pump and perform vacuum drying.

Step 2: After vacuum drying, close the high and low pressure gauge valves. Then remove the middle gauge line from the connector of vacuum pump. Then connect to the refrigerant tank.

Step 3: Loosen the middle gauge line from the connector of pressure gauge to a proper extent and slightly open the valve of refrigerant tank. Evacuate the middle gauge line. Then tighten up the connector again and completely open the valve of refrigerant tank at the same time.

Step 4: Keep the refrigerant tank erect and put it on an electronic scale. Record the current weight as m1.

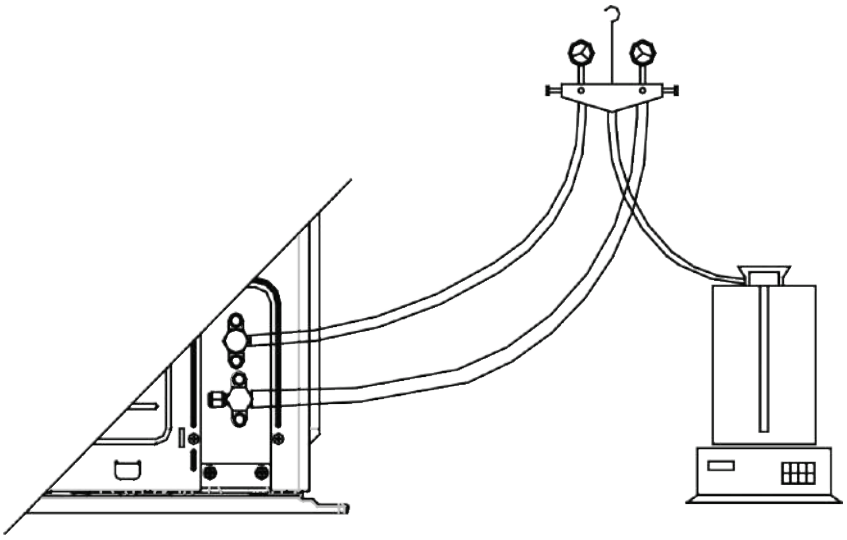

Step 5: Open the high pressure gauge valve (Keep the low pressure gauge valve closed). Then charge refrigerant into the system. Meanwhile, record the weight of refrigerant tank as m2.

Step 6: m1-m2=m. If m equals to the required charging quantity M, close the valve of refrigerant tank at once. Then move to step 8.

Step 7: If you can't continue to charge refrigerant into the system and the quantity of charged refrigerant is less than the required charging quantity, then record the current quantity of charged refrigerant:

m=m1-m2

m`=M-m

The remaining charging quantity is: m`=M-m

Step 8: After charging, remove the pressure gauge.

Refrigerant charging when unit is turned on:

Step 1: Close the valve of refrigerant tank. First remove the pressure gauge lines and connect the outdoor unit to the indoor unit. Then reconnect the pressure gauge lines. Connect the low pressure gauge line to the other joint of gas valve and connect the high pressure gauge line to the liquid valve. Connect the middle gauge line to the vacuum pump. Power on the vacuum pump and perform vacuum drying.

Step 2: After vacuum drying, close the high and low pressure gauge valves. Then remove the middle

gauge line from the connector of vacuum pump. Then connect to the refrigerant tank.

Step 3: Loosen the middle gauge line from the connector of pressure gauge to a proper extent and slightly open the valve of refrigerant tank. Evacuate the middle gauge line. Then tighten up the connector again and completely open the valve of refrigerant tank at the same time.

Step 4: Turn on the air conditioner and let it run for a while.

Step 5: Open the low pressure gauge valve (Keep the high pressure gauge valve closed). Then charge in the remaining charging quantity m.

Step 6: After all required refrigerant is charged in, close the valve of refrigerant tank.

Step 7: Remove the pressure gauge to finish the refrigerant charging work.

Procedure of refrigerant charging

Following is the supplementary requirement for refrigerant charging on the basis of normal procedure:

1) Make sure that when charging refrigerant into the system, no other types of refrigerant will be mixed. The pipeline for refrigerant charging should be as short as possible to reduce the amount of refrigerant left in it.
2) The refrigerant tank should stand erect.
3) Make sure the refrigerating system is already grounded before refrigerant charging.
4) When charging is completed (or not yet completed), stick a label on the system.
5) Before re-charging refrigerant into the system, use oxygen-free nitrogen to perform pressure test. When charging is completed, perform leak test before trial running. Before leaving the workplace, perform a leak test again.

4.4 Maintenance of Major Components

4.4.1 Replacement of wired controller

Please refer to the instruction manual of wired controller SWC-05.

4.4.2 How to replace the compressor

4.4.2.1 Diagnosis of compressor failure

A. On condition that the unit can be started up

Step 1:

If the unit can be started up, then start it up to check the current of the faulted compressor. Use a pressure gauge to measure the pressure of the big and small valves. Connect with a computer to monitor the data. Refer to the following table based on the recommended working current. The electric current of an inverter compressor will be different under different rotation speed or different working conditions. If the compressor is working at 60Hz, the working current corresponding to different condensing temperature and evaporating temperature is shown below:

(1) Inverter compressor FTz-AN108ACBD

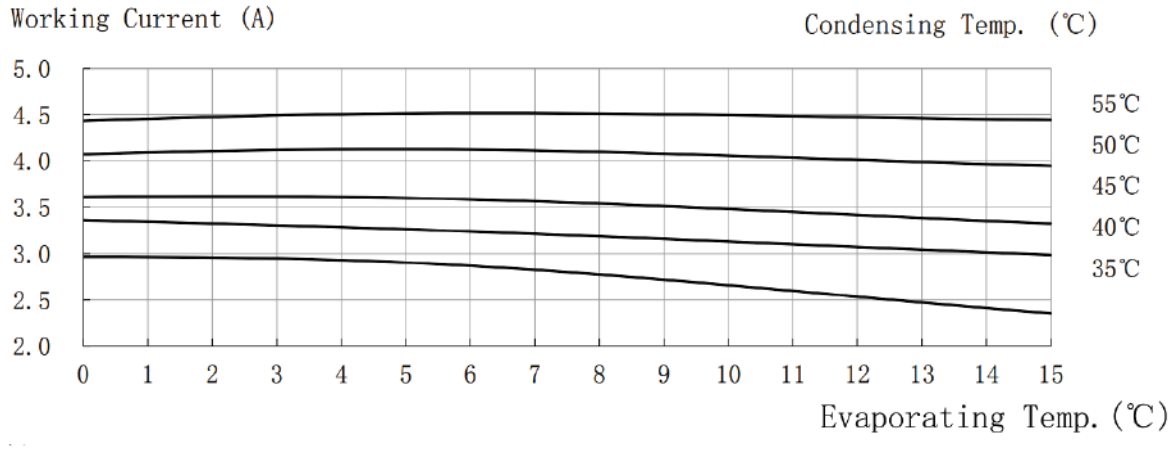

(2) Inverter compressor QXF-A120zH170A

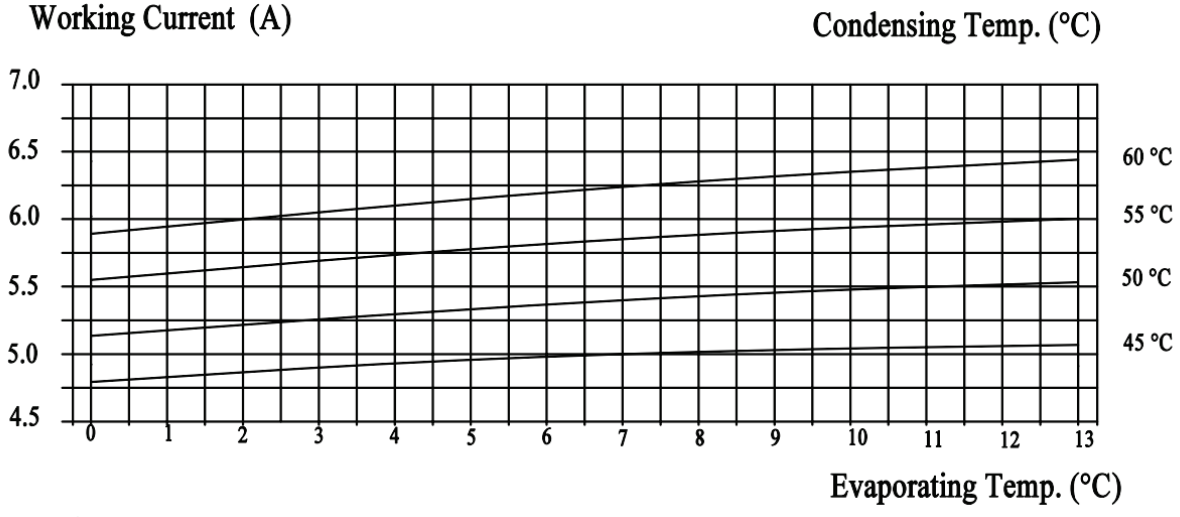

(3) Inverter compressor QXFS-M180zX170

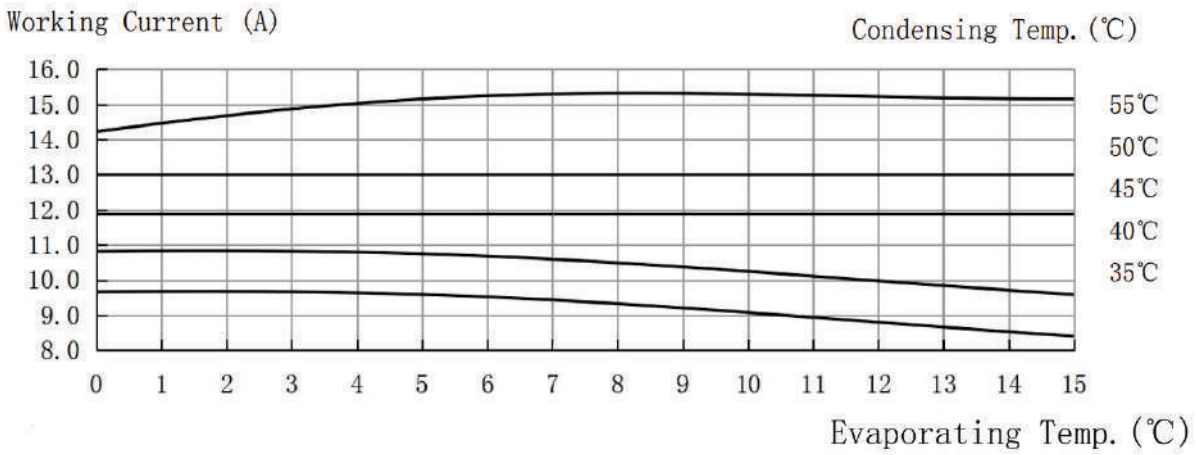

(4) Inverter compressor QXFS-B238zX070

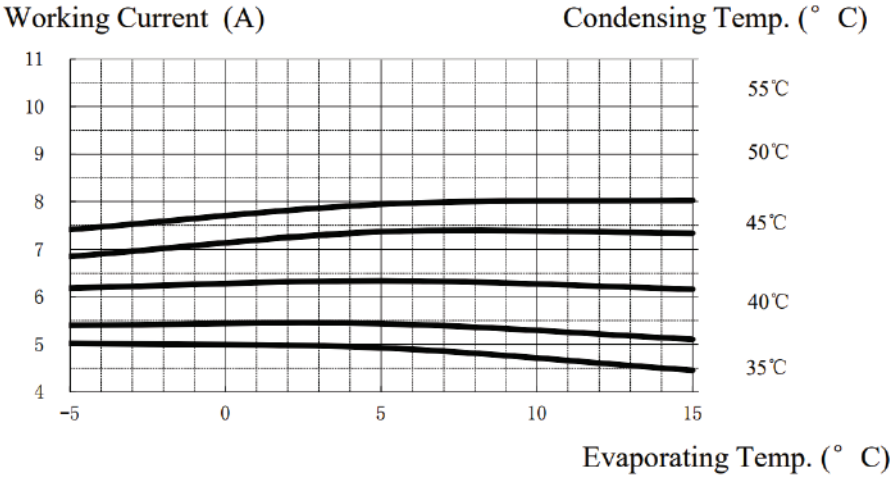

(5) Inverter compressor QXFS-D280zX070B

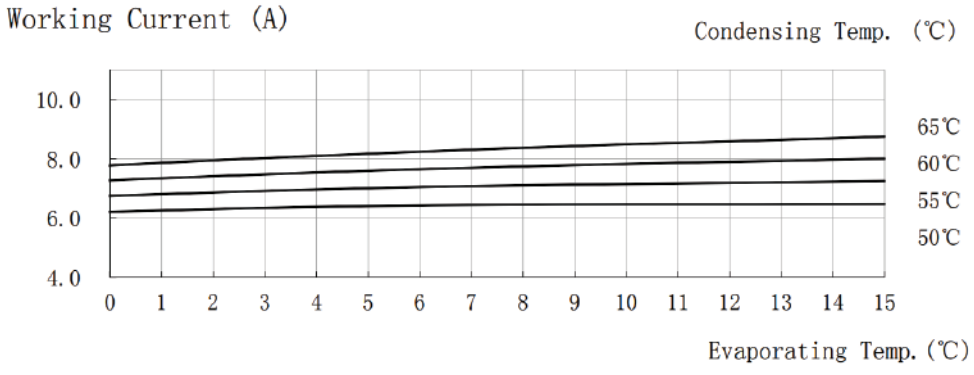

(6) Inverter compressor QXFS-D388zX050A

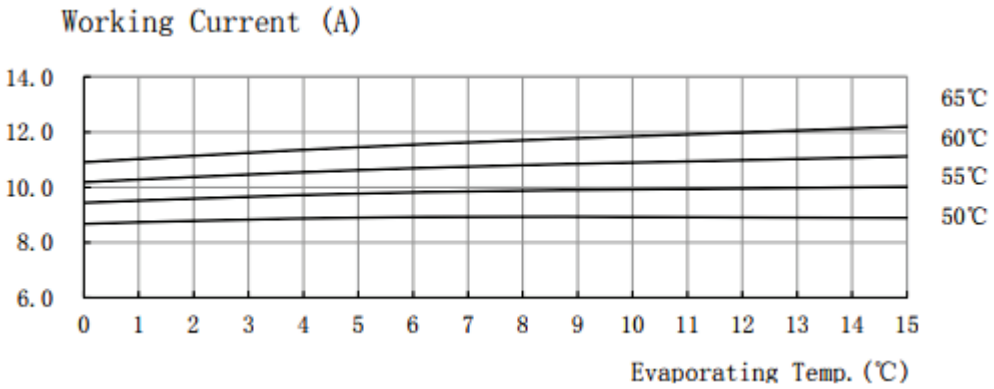

Step 2:

Judge whether the operating noise of the compressor is normal, and whether there is a sharp noise or obvious scraping. If there is a normal compressor working nearby, compare their operating noise.

Step 3:

Examine whether the electronic expansion valve of the outdoor unit is active and whether the 4-way valve works or not. How to examine:

(1) Electronic expansion valve:

The electronic expansion valve will be reset every time when the unit is powered on or off. Touch the valve and you can feel the movement of the valve spool. In the last stage of the reset process, you will hear the click of the valve and feel its vibration.

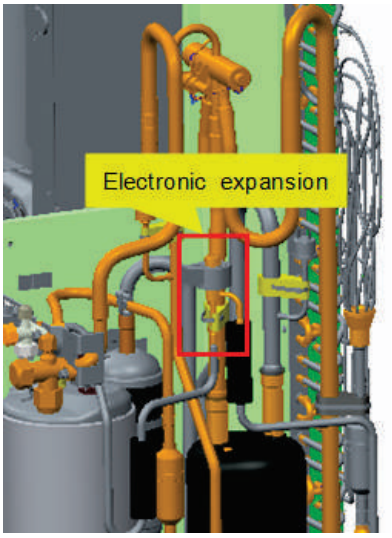

Touch the electronic expansion valve:

a. Touch the top of the electronic expansion valve and you can feel its move as it is reset upon startup.

b. Make sure the coil is fixed firmly.

(2) 4-way valve:

During normal operation, the 4 copper tubes that connect to the valve will have different temperature. When the 4-way valve is working, it will generate some noise and vibration.

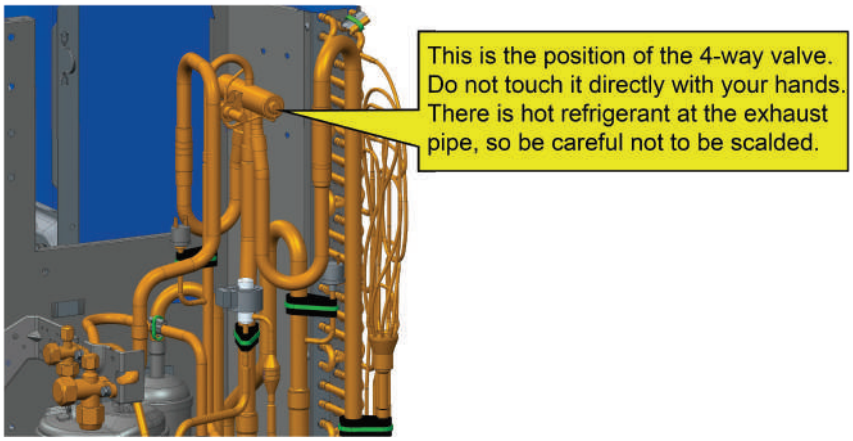

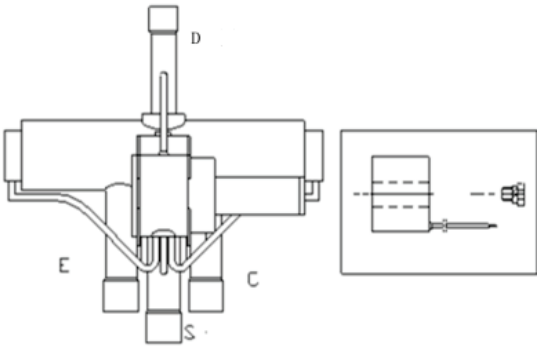

D- Connect to the exhaust side

Caution! High temperature!

Labels on the 4-way valve:

D-connect to the exhaust side; E-connect to the evaporator of indoor unit;

S-connect to the inhalation side of the liquid separator; C-connect to the condenser;

When the system is in cooling mode, C-the pipeline is with high pressure and high temperature; E, S-the pipeline is with low pressure and low temperature;

When the system is in heating mode, E-the pipeline is with high pressure and high temperature; C, S-the pipeline is with low pressure and low temperature;

Because D is connected to the exhaust side, it is with high pressure and high temperature regardless of the operating mode. When the unit is powered on, in defrosting or oil return mode, the 4-way valve will produce some noise. Do not touch the pipes directly with your hands and be cautious of the hot temperature.

Step 4:

Check the drive board of compressor, i.e. the IPM module.

Please refer to the IPM checking method in the section of troubleshooting.

Check the drive board of compressor, i.e. the IPM module.

Please refer to the IPM checking method in the section of troubleshooting.

B．On condition that the unit cannot be started up

Step 1:

Cut off the power supply and detach the cover of the wiring box of the compressor. Check the wiring of the compressor.

Step 2:

Check the resistance between the wiring terminals (U, V, W) of compressor.

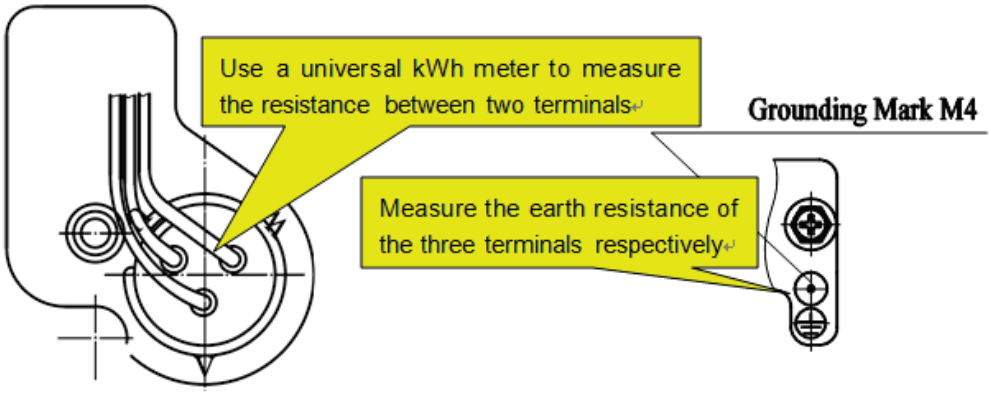

Refer to the following table for the resistance between any two terminals:

Compressor model	UV Winding resistance	VW Winding resistance	WU Winding resistance
FTz-AN108ACBD	3.41±7%Ω	3.41±7%Ω	3.41±7%Ω
QXF-A120zH170A	1.8±7%Ω	1.8±7%Ω	1.8±7%Ω
QXFS-M180zX170	1.62±7%Ω	1.62±7%Ω	1.62±7%Ω
QXFS-B238zX070	0.78±7%Ω	0.78±7%Ω	0.78±7%Ω
QXFS-D280zX070B	0.765±7%Ω	0.765±7%Ω	0.765±7%Ω
QXFS-D388zX050A	0.67±5%Ω	0.67±5%Ω	0.67±5%Ω

Measure the earth resistance of each wiring terminal. The resistance should be above 10 megohm. If not, we can judge that the compressor is faulted inside.

Step 3:

On condition that the unit cannot be started up, we also need to check the solenoid valve assembly of the system, including the electronic expansion valve. The checking method is the same as instructed above.

Step 4:

Check whether the IPM module is normal. Please refer to the IPM checking method in the section of troubleshooting.

4.4.2.2 Replacement of compressor

Step 1: Preparation

(1) Prepare the components for replacement

When carrying the old and new compressors, do not place the compressors horizontally or upside down. The angle of inclination should be within ±30°. Make sure the lubricant inside the compressors will not flow from the oil balance mouth. The suction and exhaust openings of the compressors must be sealed. If a rubber seal is missing, user adhesive tape to seal the opening. This is to prevent the compressor oil from contacting the air.

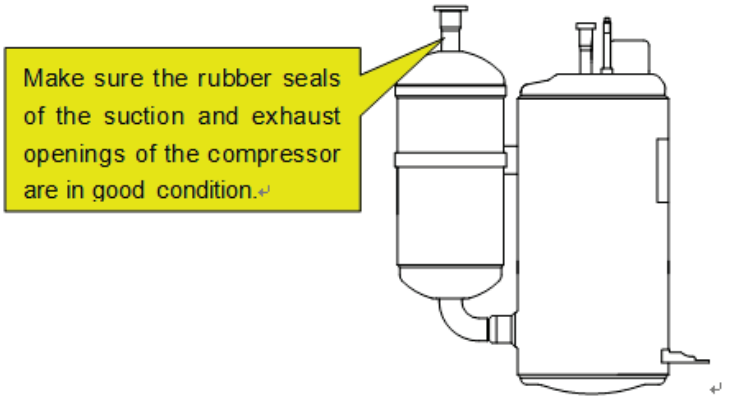

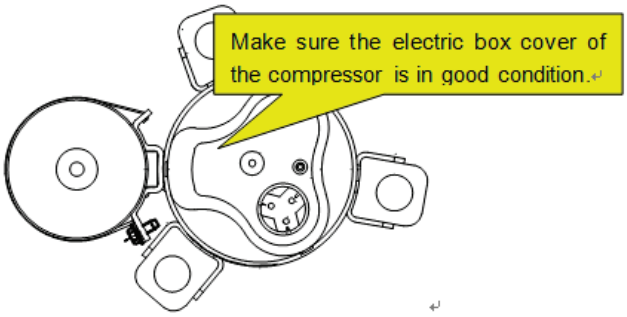

Caution!

Before replacement, make sure the nameplates and models of the compressors are identical.

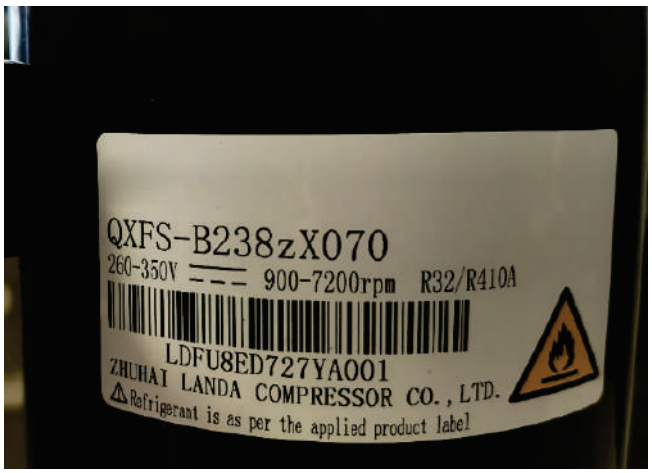

Make sure the rubber seal of the liquid separator is complete. If it is lost during transport, use adhesive tape to seal the opening at once. The container must be dry inside and well sealed.



Caution!

Make sure the lubricant is sealed inside the compressors.

(2) Prepare relevant tools

1) Prepare nitrogen. Please strictly follow the nitrogen welding standards during the welding process. Make sure there is sufficient nitrogen. The nitrogen pressure should be above 2.0MPa;

2) Prepare welding rods. Prepare some welding rods of common specifications and some special welding rods that contain more than 5% silver. They are used to weld the compressor. The suction and exhaust openings of the compressor are all connected to copper-plated steel pipes, so we need to use special welding rods and solder;

3) Prepare applicable welding tools. Please evaluate how much oxygen and acetylene should be used according to the current welding condition. Try to avoid repeated welding.

4) Prepare a complete set of tools, including an internal hexagonal wrench, diagonal pliers, pincer pliers, nipper pliers, a universal meter, a pressure gauge, cross screwdriver, straight screwdriver, more than two wrenches, insulating tape and wire cables.

Step 2: Disconnect power

If the compressor needs to be replaced after judging as above, then switch off the outdoor unit and disconnect the power cable of the outdoor unit. Use insulating tape to wrap the power cable and put a notice board on the power switch to remind people to be cautious of electric shock.

Step 3: Neaten the electric components

When you detach the compressor wires, temperature sensors and electric heaters, mark them correspondingly for the convenience of reconnecting them.

Step 4: Discharge refrigerant

Discharge refrigerant from the system. Discharge simultaneously from the high pressure side and low pressure side. Do not discharge too fast (It should take more than 12h to completely discharge the refrigerant); otherwise, large quantity of lubricant will escape from the system together with the refrigerant.

Step 5: Detach the compressor

WARNING	
(1)	The area shall be checked with an appropriate refrigerant detector prior to and during work, to ensure the technician is aware of potentially flammable atmospheres. Ensure that the leak detection equipment being used is suitable for use with flammable refrigerants, i.e. non-sparking, adequately sealed or intrinsically safe.
(2)	Under no circumstances shall potential sources of ignition be used in the searching for or detection of refrigerant leaks. A halide torch (or any other detector using a naked flame) shall not be used.

Check the condition of the damaged compressor, including its position and model.

If the information of the compressor is confirmed, check the oil quality.

(a) If the oil is clear and impurities-free, we consider that the oil of the system is not polluted. Meanwhile, if we confirm that the valves and pipes are also normal, then we can replace the compressor only. For the removal of compressor, please refer to the section: Removal of Major Components.

How to check oil quality:

(1) After the compressor is detached, put it on a solid ground and shake it at an angle of 30~45° to ensure that the contaminant at the bottom of the compressor can be poured out.

(2) Place the compressor at a position above the ground level and then pour out the oil from the air outlet of the compressor. Collect the oil in a transparent container. The amount of oil should be over 150ml.

Notes:

1) The axial direction of the compressor should not slant at an angle larger than 20° to the horizontal direction.

2) Prevent the compressor from falling.

3) Put a transparent container (over 150ml in volume) under the exhaust pipe to collect the compressor oil, thus we can see the oil quality.

(3) Put the container of compressor lubricant in a bright location and see if there is impurity and discoloration. Sniff at the compressor lubricant. Normally, there is no pungent smell.

(b) If the oil is contaminated, replace the compressor and the gas-liquid separator.

Note: Confirm whether the compressor needs to be replaced. The pipe mouths of the faulted compressor must be sealed by adhesive tape as soon as the compressor is detached. Make sure the compressor is well preserved for the ease of future analysis.

Step 6: Check the components

If the oil is contaminated, check the components of the unit, including the gas-liquid separator.

Check the gas-liquid separator

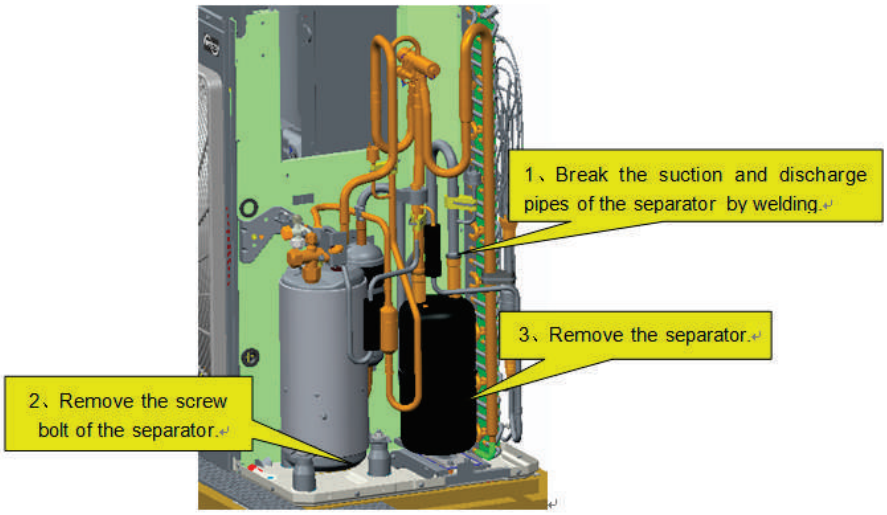

When the separator is detached, check whether there are impurities inside. Below is the checking method:

Note: When pouring the liquid from the separator, make sure the discharge pipe is at the lower position. Slant at an angle not larger than 20°

Use a transparent container to collect the content inside the separator. Check its color, seal it well and return it to the factory for inspection.

Note: If the compressor is damaged and needs to be replaced, the gas-liquid separator should also be replaced, whether or not there are impurities in the separator or other abnormal conditions.

Confirm which parts of the system should be replaced. Make sure the pipe mouths of the damaged parts or components are sealed by adhesive tape as soon as they are detached. Keep them in the original condition for future analysis.

Step 7: Clear the pipeline

After confirming which parts of the system should be replaced, check the pipeline of the system. Blow through the main pipeline with nitrogen. After clearing the pipeline, if the components are not replaced immediately, seal the pipeline with adhesive tape to prevent the system from being contaminated by water and impurities in the air.

Step 8: Replace the compressor

For the removal of compressor, please refer to the section: Removal of Major Components.

Step 9: Check/Replace the gas-liquid separator

Note: If a compressor is damaged and needs to be replaced, its gas-liquid separator should also be replaced. This is to avoid the abnormal condition of the separator from affecting the safe and reliable operation of the system.

For the removal of gas-liquid separator, please refer to the section: Removal of Major Components.

Step 10: Check the system for leaks

(1) First of all, check each welding point. Check whether the welding points are smooth and whether there is any obvious welding hole or other abnormal condition.

(2) Next, fill high-pressure nitrogen into the system for leak detection. If it is only the outdoor unit that needs to be repaired and the indoor unit is confirmed normal, then it's OK to charge high-pressure nitrogen into the outdoor unit only. Fill in the nitrogen simultaneously from the high pressure side and low pressure side. We recommend charging the nitrogen from the big and small valves at the same time. The pressure of nitrogen should be above 20kgf. Then use soapy water to check for leaks. Check the welding points particularly.

(3) Finally, retain the pressure of the system. Fill high-pressure nitrogen into the system and maintain the pressure above 25kgf. Close the big and small valves and keep the pressure of indoor and outdoor units for more than 12h. If the pressure remains unchanged, then start vacuum pumping; otherwise, check the system for leaks again.

Temperature should be considered when judging the pressure change. If temperature changes by 1℃, pressure will change by 0.01MPa or so.

For example, if temperature is 30℃ when nitrogen of 2.5MPa is charged, and temperature changes to 25℃ after 12h, we consider that the system is qualified if the pressure is found at 2.43MPa or above.

Step 11: Evacuate the system and charge refrigerant

Please refer to the section of maintenance: vacuum pumping and refrigerant charging.

Step 12: Connect electric components

Connect cables, compressor wires and the electric heating belt according to the signs marked before and the wiring diagram on the cover of the electric box.

4.5 Removal of Major Components

4.5.1 Removal of ODU Major Components

Picture	Name	Function
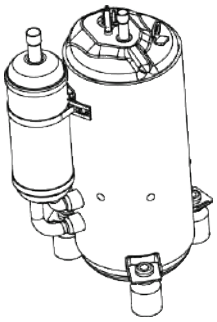	Compressor	Through compression, the low pressure refrigerant occupies a less space. As its pressure and temperature both rise, it becomes high pressure and high temperature refrigerant. It is the power drive of the system.
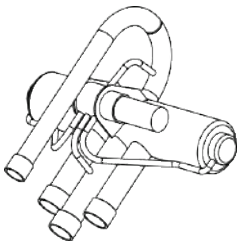	4-way valve	It is used to change directions, the flow of refrigerant in cooling/heating.
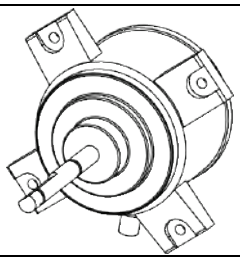	Motor	The power drive of the fan. It enables the fan to run so as to provide smooth currents of air for forced convection and heat exchange of condenser and evaporator.
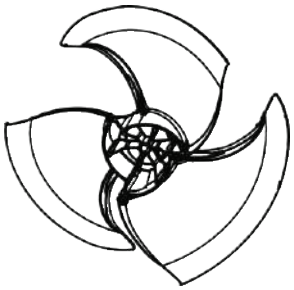	Fan	It is used to provide smooth currents of air for forced convection and heat exchange of condenser and evaporator.
	Gas liquid separator	Installed at the suction side of compressor, it can separate the liquefied refrigerant from the gaseous refrigerant to make sure that only gaseous refrigerant will be sucked into the compressor. If liquefied refrigerant gets inside the compressor, ineffective compressor or slugging phenomenon will occur.

Picture	Name	Function
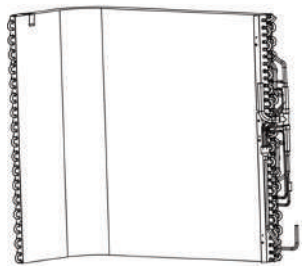	Condenser	It is used to transfer partial heat of the hot flow to the cold flow so that the flow temperature can reach the specified index. It is an energy exchanging device.
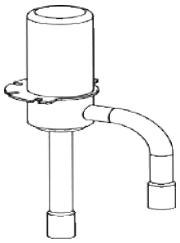	Electronic expansion valve	It is used to lower the pressure and temperature of liquefied refrigerant and adjust the flow of refrigerant entering the evaporator.

Model: ASGE-12BI2, ASGE-18BI2, ASGE-24BI2, ASGE-30BI2

Removal of front panel		
Note: Before removing the front panel, make sure power is cut off.		
Step	Picture	Work instruction
1. Remove the upper cover plate.	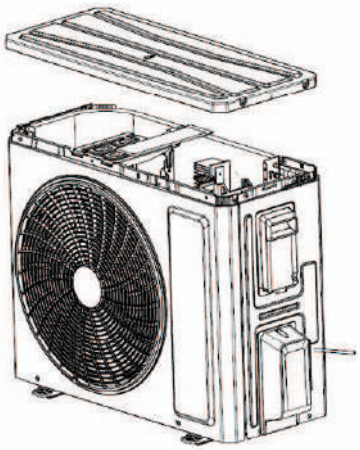	● Unscrew the screws of the upper cover plate with a screwdriver.
2. Remove the front grill.	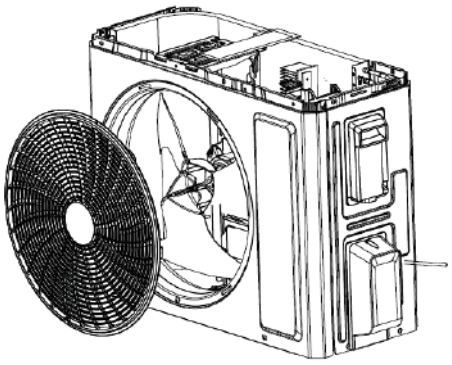	● Unscrew the screws of the front grill with a screwdriver.

Removal of front panel		
Note: Before removing the front panel, make sure power is cut off.		
Step	Picture	Work instruction
3. Remove the front plate.	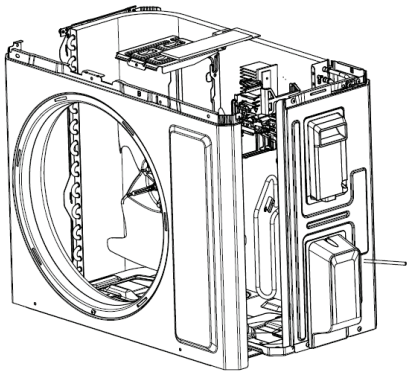	● Unscrew the screws of the front plate with a screwdriver.

Model: ASGE-12BI2, ASGE-18BI2, ASGE-24BI2, ASGE-30BI2

Removal of compressor		
Note: Before removing the compressor, make sure there is no refrigerant in the pipeline and power is cut off.		
Step	Picture	Work instruction
1. Remove the panels and wires.	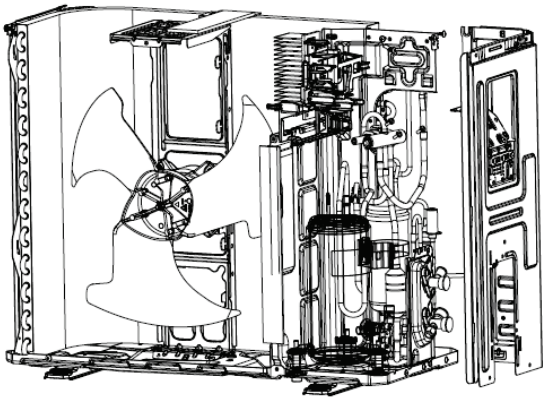	● Remove the upper, lower and front panels. ● Loosen the securing screws of the wires with a screwdriver. ● Remove the wires. Note: When removing the wires, mark the wire terminals corresponding to their color so as to avoid misconnection.
2. Loosen the securing screws at the foot of compressor.	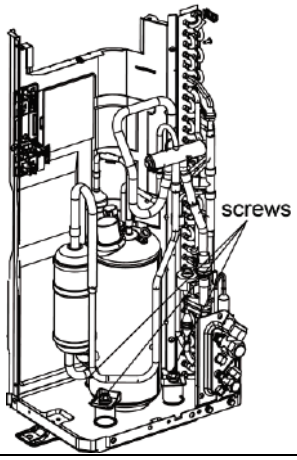	● Use a wrench to twist off the screws at the foot of compressor.

Removal of compressor		
Note: Before removing the compressor, make sure there is no refrigerant in the pipeline and power is cut off.		
Step	Picture	Work instruction
3. Break off the pipes that connecting to the compressor.	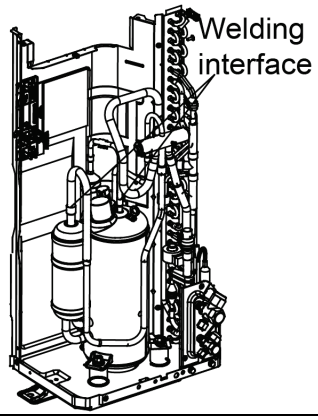	● Weld the pipes that are connected to the compressor. ● Then remove the pipes. Note: When welding the pipes, do not let the flame burn the other components.
4. Remove the compressor from the chassis.	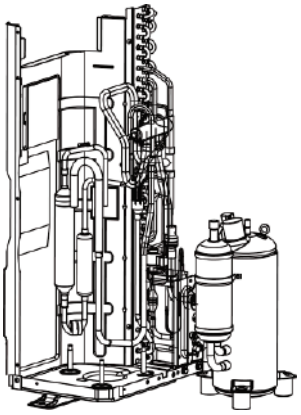	● Take out the compressor and replace it. Note: When replacing the compressor, avoid touching the nearby pipeline and components.
5. Fix the new compressor back onto the chassis.	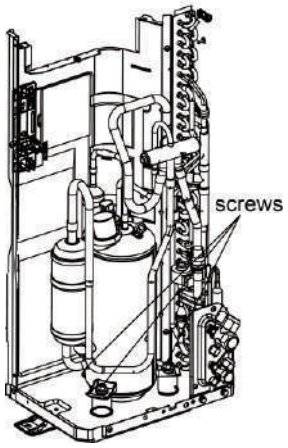	● After replacing the compressor, tighten up the screws at the foot of compressor.
6. Connect the compressor suction port and exhause port with the pipes.	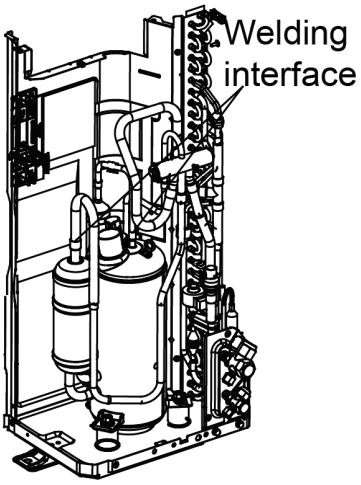	● Weld the compressor connection pipes and connect them to the compressor. Note: When replacing the compressor, avoid touching the nearby pipeline and components.

Removal of compressor		
Note: Before removing the compressor, make sure there is no refrigerant in the pipeline and power is cut off.		
Step	Picture	Work instruction
7. Connect the compressor wires.	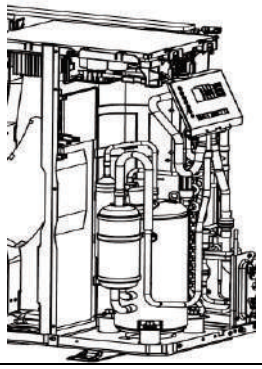	● Connect the compressor wires to the wire terminals on the top of compressor. Note: When connecting the wires, be sure to match the colors with the corresponding wire terminals.

Model: ASGE-12BI2, ASGE-18BI2, ASGE-24BI2, ASGE-30BI2

Removal of 4-way valve		
Note: Before removing the 4-way valve, make sure refrigerant is fully discharged from the unit and power is cut off.		
Step	Picture	Work instruction
1. Take off the electromagnetic coil of the 4-way valve.	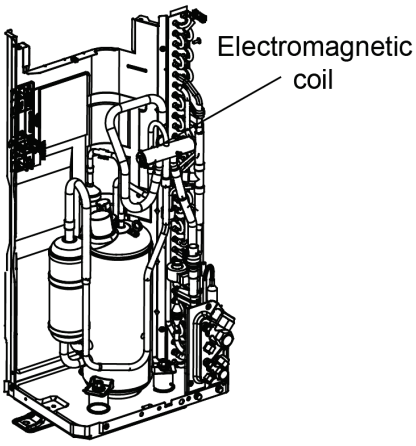	● Carefully unscrew the screws of electromagnetic coil with a screwdriver.
2. Break off the connection pipes from the 4-way valve.	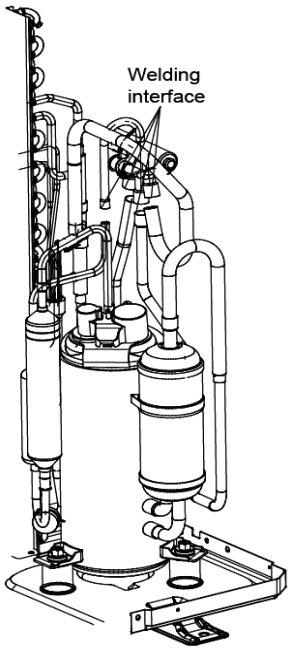	● Use a soldering gun to loosen the 4 joints on the 4-way valve and then remove the connection pipes. Note: When welding the pipes, the 4-way valve should be wrapped with wet cloth for cooling. Do not let the flame burn the other components.

Removal of 4-way valve		
Note: Before removing the 4-way valve, make sure refrigerant is fully discharged from the unit and power is cut off.		
Step	Picture	Work instruction
3. Replace the 4-way valve and connect it to the connection pipes.	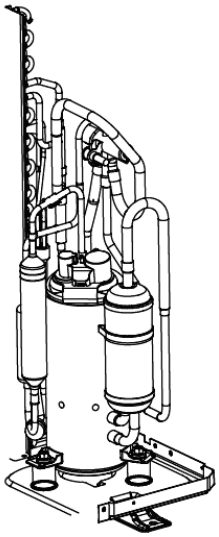	• Replace the 4-way valve and then use a soldering gun to weld the 4 joints of the 4-way valve. • Tighten up the screws of electromagnetic coil with a screwdriver. Note: When welding the pipes, the 4-way valve should be wrapped with wet cloth for cooling. Do not let the flame burn the other components.

Model:ASGE-12BI2, ASGE-18BI2, ASGE-24BI2, ASGE-30BI2

Removal of fan and motor		
Note: Before removing the fan, make sure power is cut off.		
Step	Picture	Work instruction
1. Remove the grill.	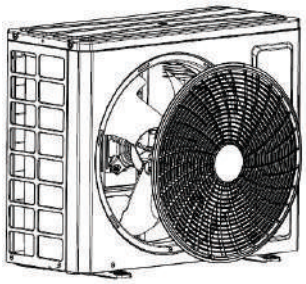	• Use a screwdriver to unscrew the two screws on the upper left and lower right corners.
2. Remove the fan.	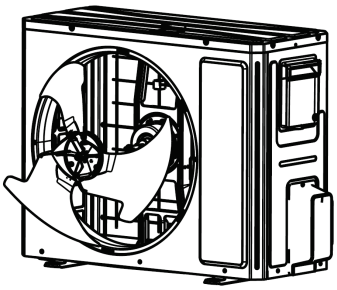	• Use a wrench to remove the specialized nut and gasket of the fan. Note: Please keep the nut and gasket safe after removing them from the fan.
3. Remove motor.	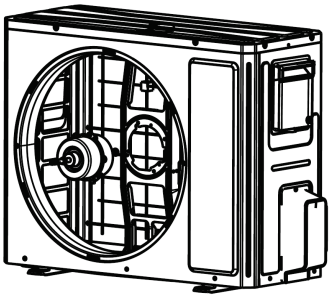	• Use a screwdriver to unscrew the bolt of motor. Note: Motor wire should be first removed from the electric box.

Model: ASGE-12BI2, ASGE-18BI2, ASGE-24BI2, ASGE-30BI2

Removal of condenser		
Note: Before removing the condenser, make sure there is no refrigerant in the pipeline and power is cut off.		
Step	Picture	Work instruction
1. Remove the panels.	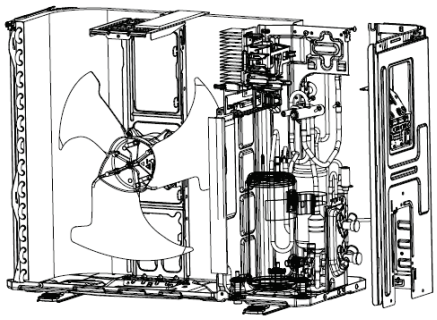	● Remove the upper, lower and front panels.
2. Remove the electric box.	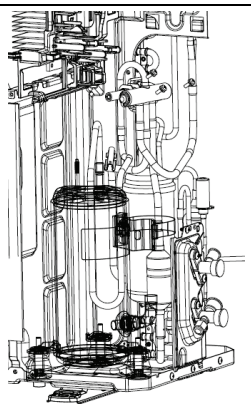	● Loosen the wire clamp at the bottom of the electric box. ● Unscrew the screws of electric box. ● The connection wires inside and outside the electric box should be removed.
3. Remove motor support.	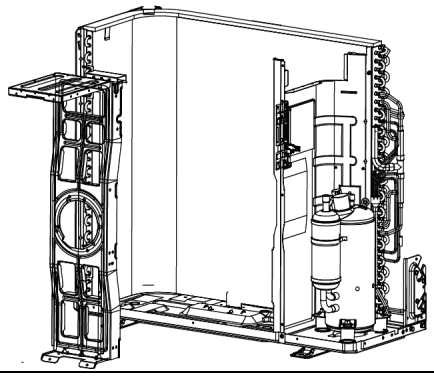	● When removing the motor support, be careful to protect the components.
4. Remove the condenser.	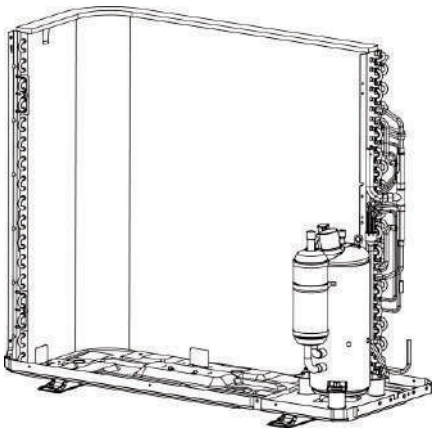	● Heat up the welding points of connection pipes through gas welding until the pipes break off. Note: When welding the pipes, do not let the flame burn the other components. The welding points of condenser are steel and copper welding points. Be sure to maintain the welding quality.

Removal of condenser		
Note: Before removing the condenser, make sure there is no refrigerant in the pipeline and power is cut off.		
Step	Picture	Work instruction
5. Take out the condenser.	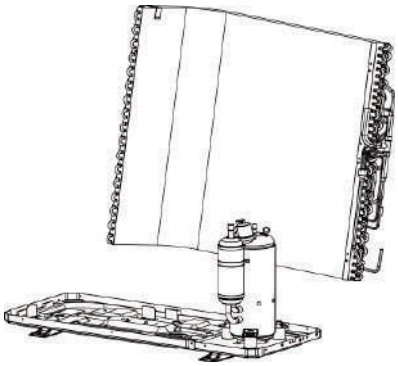	● Loosen the securing screws of condenser support. Take off the plate type heat exchanger and the support as a whole.

Model: ASGE-12BI2, ASGE-18BI2, ASGE-24BI2, ASGE-30BI2

Removal of electronic expansion valve		
Note: Before removing the electronic expansion valve, make sure there is no refrigerant in the pipeline and power is cut off.		
Step	Picture	Work instruction
1. Loosen the wire clamp at the bottom of the electric box and the screws of electric box.	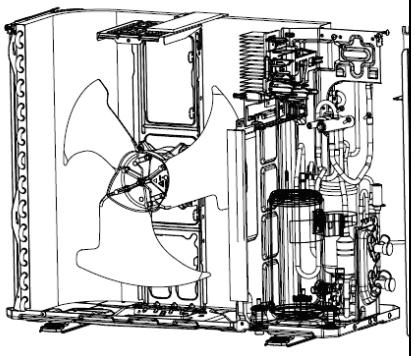	● Remove the upper, lower and front panels. ● Loosen the wire clamp at the bottom of the electric box. ● Unscrew the screws of electric box.
2. Remove the electric box.	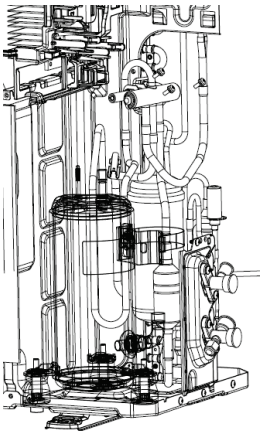	● The connection wires inside and outside the electric box should be removed. ● When removing the electric box, be careful to protect the components.

Removal of electronic expansion valve		
Note: Before removing the electronic expansion valve, make sure there is no refrigerant in the pipeline and power is cut off.		
Step	Picture	Work instruction
3. Remove the electronic expansion valve.	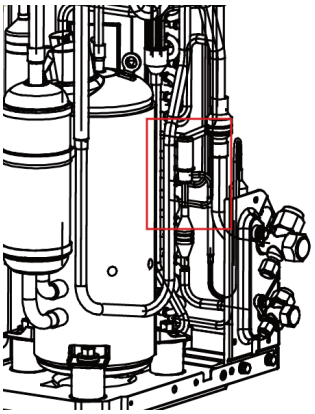	● Take off the coil of electronic expansion valve. ● Loosen the connection pipe of electronic expansion valve by welding. Then remove the connection pipe. Note: When welding the pipe, do not let the flame bunt the other components.
4. Take out the electronic expansion valve.	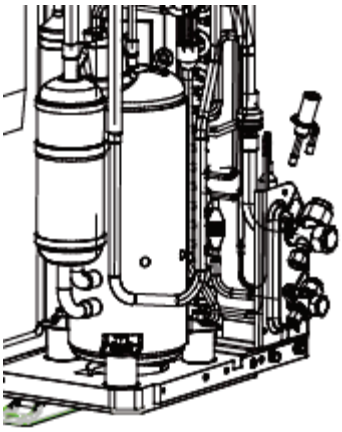	● Take out the electronic expansion valve

Model: ASGE-36BI2, ASGE-42BI2

Removal of front panel		
Note: Before removing the front panel, make sure power is cut off.		
Step	Picture	Work instruction
1. Remove the upper cover plate.	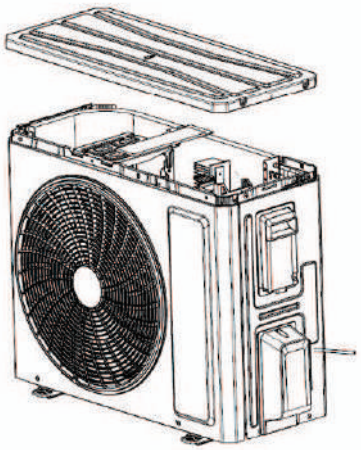	● Unscrew the screws of the upper cover plate with a screwdriver.

Removal of front panel		
Note: Before removing the front panel, make sure power is cut off.		
Step	Picture	Work instruction
2. Remove the front grill.	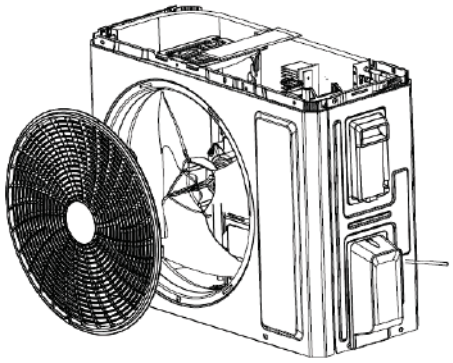	● Unscrew the screws of the front grill with a screwdriver.
3. Remove the front plate.	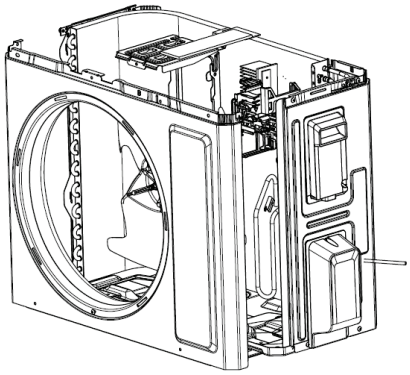	● Unscrew the screws of the front plate with a screwdriver.

Model: ASGE-36BI2, ASGE-42BI2

Removal of compressor		
Note: Before removing the compressor, make sure there is no refrigerant in the pipeline and power is cut off.		
Step	Picture	Work instruction
1. Remove the panels and wires.	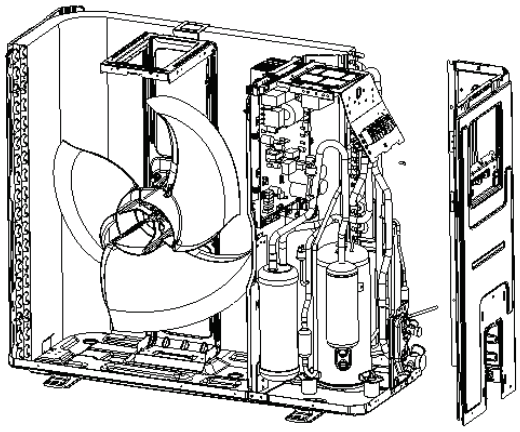	● Remove the upper, lower and front panels. ● Loosen the securing screws of the wires with a screwdriver. ● Remove the wires. Note: When removing the wires, mark the wire terminals corresponding to their color so as to avoid misconnection.

Removal of compressor		
Note: Before removing the compressor, make sure there is no refrigerant in the pipeline and power is cut off.		
Step	Picture	Work instruction
2. Loosen the securing screws at the foot of compressor.	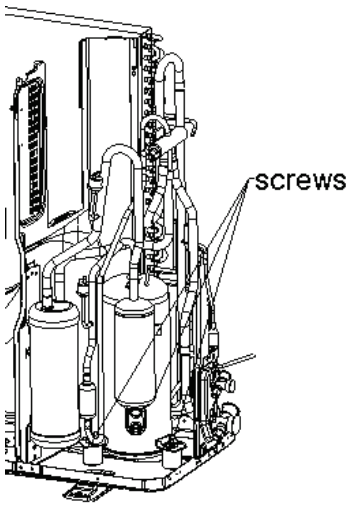	• Use a wrench to twist off the screws at the foot of compressor.
3. Break off the pipes that connecting to the compressor.	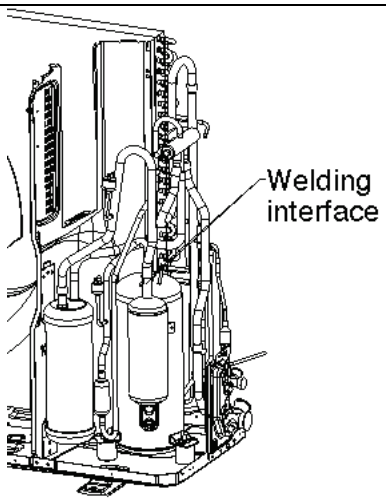	• Weld the pipes that are connected to the compressor. • Then remove the pipes. Note: When welding the pipes, do not let the flame burn the other components.
4. Remove the compressor from the chassis.	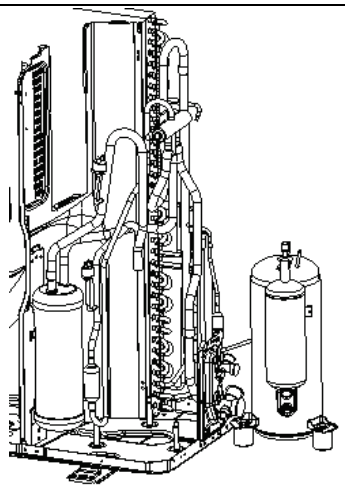	• Take out the compressor and replace it. Note: When replacing the compressor, avoid touching the nearby pipeline and components.

Removal of compressor		
Note: Before removing the compressor, make sure there is no refrigerant in the pipeline and power is cut off.		
Step	Picture	Work instruction
5. Fix the new compressor back onto the chassis.	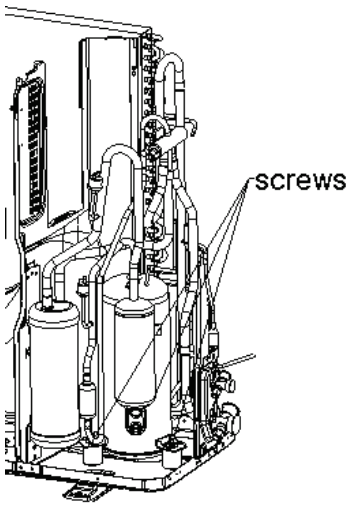	● After replacing the compressor, tighten up the screws at the foot of compressor.
6. Connect the compressor suction port and exhause port with the pipes.	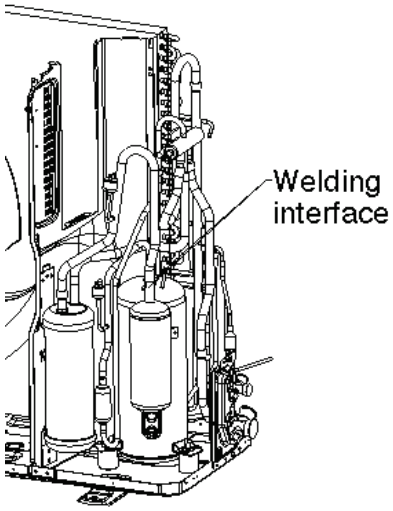	● Weld the compressor connection pipes and connect them to the compressor. Note: When replacing the compressor, avoid touching the nearby pipeline and components.
7. Connect the compressor wires.	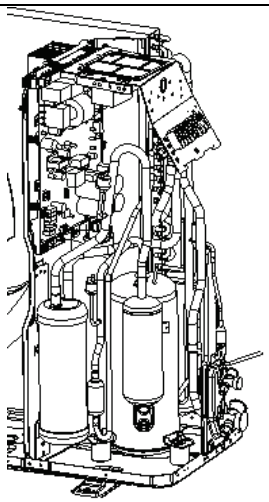	● Connect the compressor wires to the wire terminals on the top of compressor. Note: When connecting the wires, be sure to match the colors with the corresponding wire terminals.

Model: Model: ASGE-36BI2, ASGE-42BI2

Removal of 4-way valve		
Note: Before removing the 4-way valve, make sure refrigerant is fully discharged from the unit and power is cut off.		
Step	Picture	Work instruction
1. Take off the electromagnetic coil of the 4-way valve.	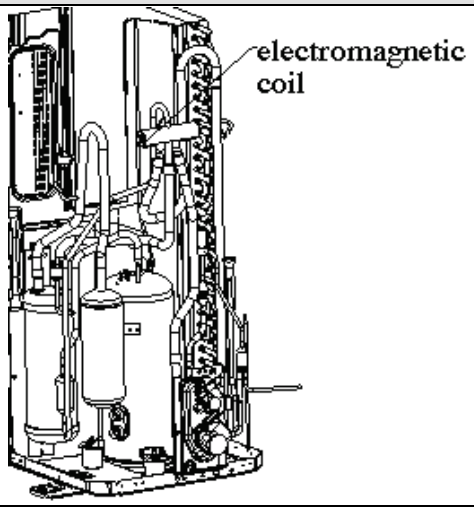	● Carefully unscrew the screws of electromagnetic coil with a screwdriver.
2. Break off the connection pipes from the 4-way valve.	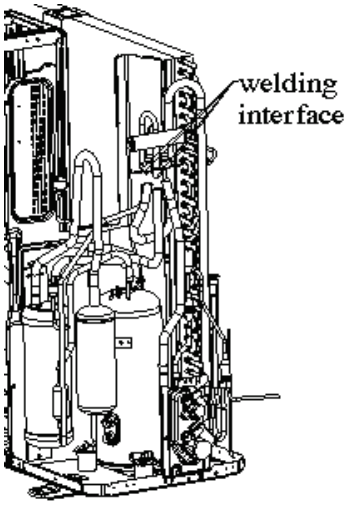	● Use a soldering gun to loosen the 4 joints on the 4-way valve and then remove the connection pipes. Note: When welding the pipes, the 4-way valve should be wrapped with wet cloth for cooling. Do not let the flame burn the other components.
3. Replace the 4-way valve and connect it to the connection pipes.	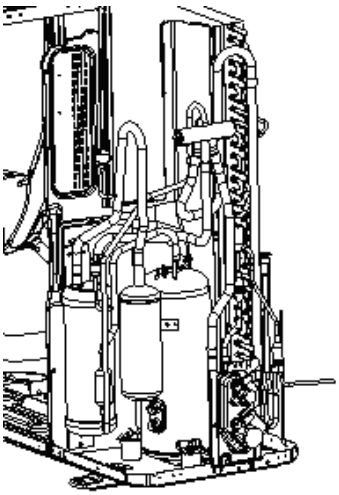	● Replace the 4-way valve and then use a soldering gun to weld the 4 joints of the 4-way valve. ● Tighten up the screws of electromagnetic coil with a screwdriver. Note: When welding the pipes, the 4-way valve should be wrapped with wet cloth for cooling. Do not let the flame burn the other components.

Model: ASGE-36BI2, ASGE-42BI2

Removal of fan and motor		
Note: Before removing the fan, make sure power is cut off.		
Step	Picture	Work instruction
1. Remove the grill.	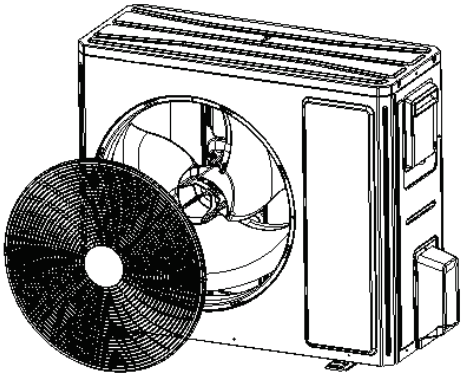	● Use a screwdriver to unscrew the two screws on the upper left and lower right corners.
2. Remove the fan.	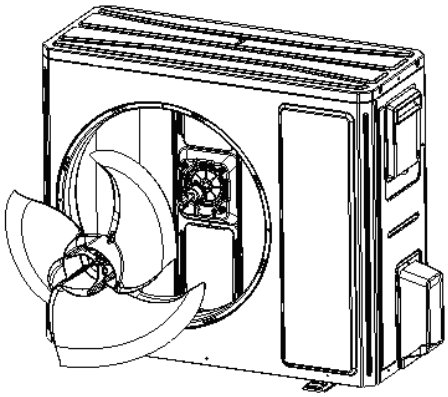	● Use a wrench to remove the specialized nut and gasket of the fan. Note: Please keep the nut and gasket safe after removing them from the fan.
3. Remove motor.	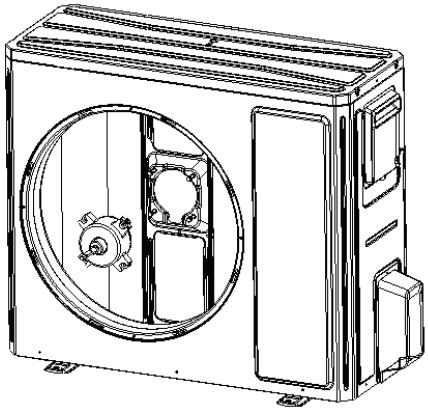	● Use a screwdriver to unscrew the bolt of motor. Note: Motor wire should be first removed from the electric box.

Model: ASGE-36BI2, ASGE-42BI2

Removal of condenser		
Note: Before removing the condenser, make sure there is no refrigerant in the pipeline and power is cut off.		
Step	Picture	Work instruction
1. Remove the panels.	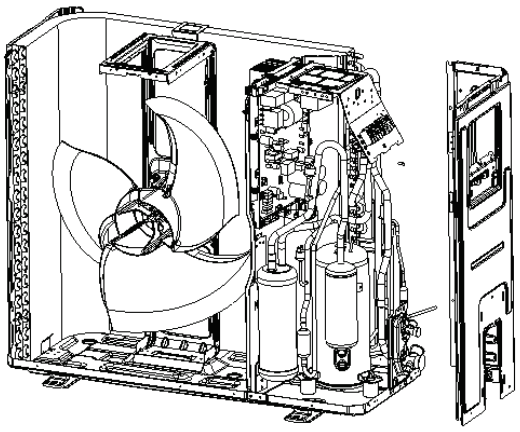	● Remove the upper, lower and front panels.
2. Remove the electric box.	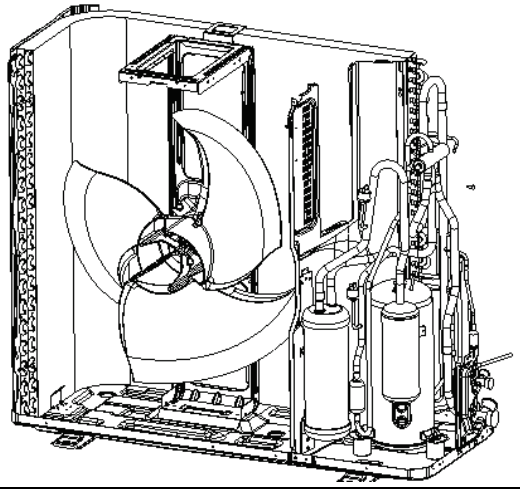	● Loosen the wire clamp at the bottom of the electric box. ● Unscrew the screws of electric box. ● The connection wires inside and outside the electric box should be removed.
3. Remove motor support.	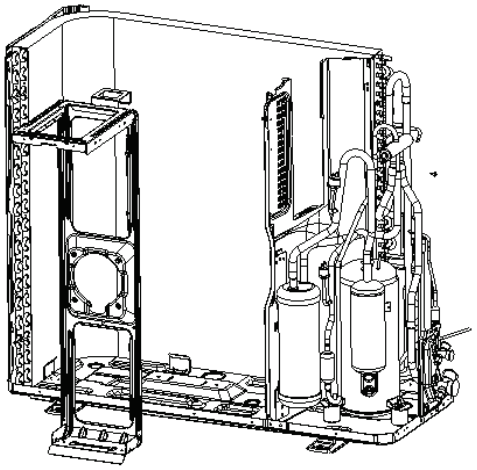	● When removing the motor support, be careful to protect the components.

Removal of condenser		
Note: Before removing the condenser, make sure there is no refrigerant in the pipeline and power is cut off.		
Step	Picture	Work instruction
4. Remove the condenser.	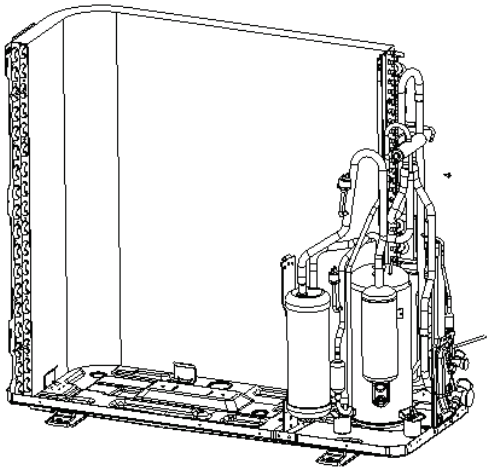	• Heat up the welding points of connection pipes through gas welding until the pipes break off. Note: When welding the pipes, do not let the flame burn the other components. The welding points of condenser are steel and copper welding points. Be sure to maintain the welding quality.
5. Take out the condenser.	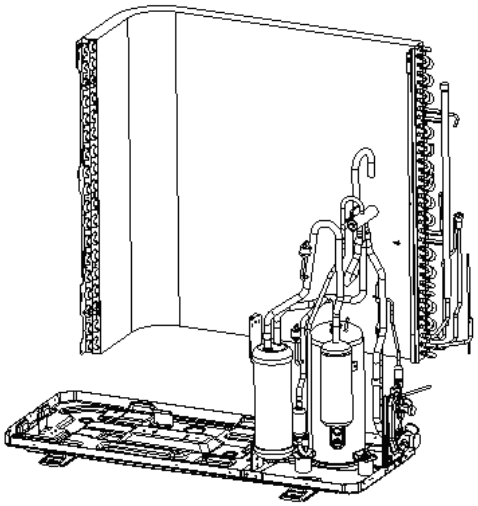	• Loosen the securing screws of condenser support. Take off the plate type heat exchanger and the support as a whole.

Model: ASGE-36BI2, ASGE-42BI2

Removal of electronic expansion valve		
Note: Before removing the electronic expansion valve, make sure there is no refrigerant in the pipeline and power is cut off.		
Step	Picture	Work instruction
1. Loosen the wire clamp at the bottom of the electric box and the screws of electric box.	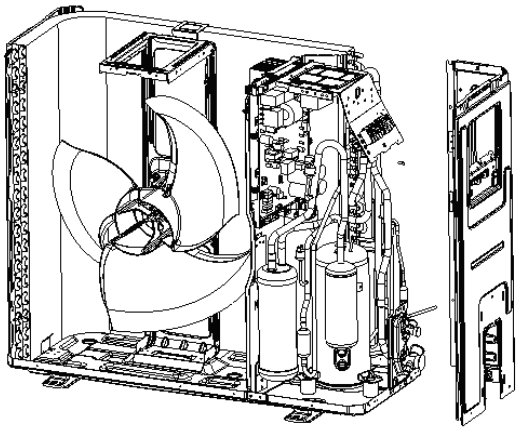	• Remove the upper, lower and front panels. • Loosen the wire clamp at the bottom of the electric box. • Unscrew the screws of electric box.

Removal of electronic expansion valve		
Note: Before removing the electronic expansion valve, make sure there is no refrigerant in the pipeline and power is cut off.		
Step	Picture	Work instruction
2. Remove the electric box.	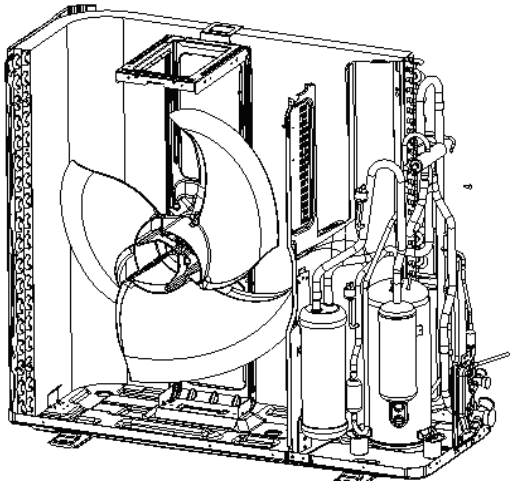	• The connection wires inside and outside the electric box should be removed. • When removing the electric box, be careful to protect the components.
3. Remove the electronic expansion valve.	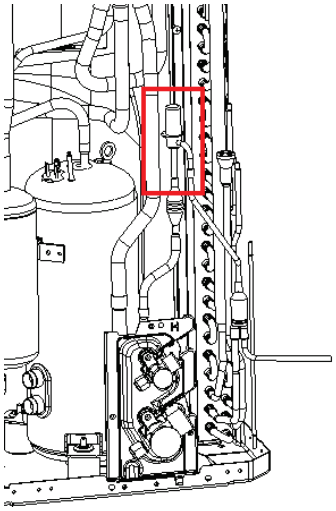	• Take off the coil of electronic expansion valve. • Loosen the connection pipe of electronic expansion valve by welding. Then remove the connection pipe. Note: When welding the pipe, do not let the flame bunt the other components.
4. Take out the electronic expansion valve.	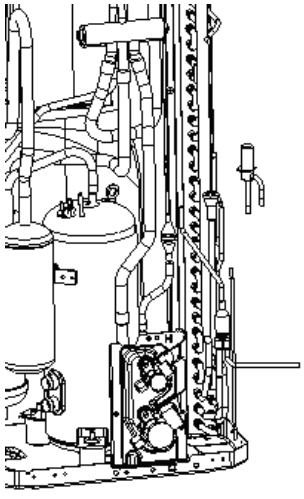	• Take out the electronic expansion valve

Model: ASGE-36BI2-3, ASGE-42BI2-3

Removal of front panel		
Note: Before removing the front panel, make sure power is cut off.		
Step	Picture	Work instruction
1. Remove the upper cover plate.	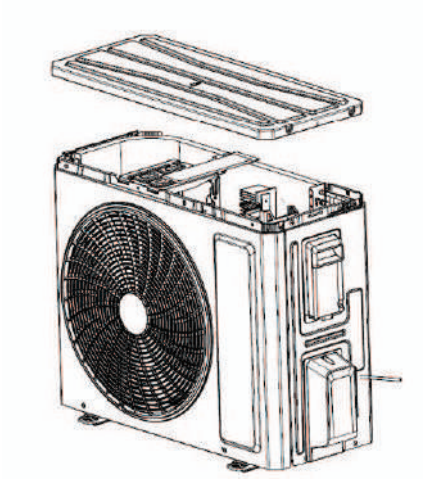	• Unscrew the screws of the upper cover plate with a screwdriver.
2.Remove the front grill.	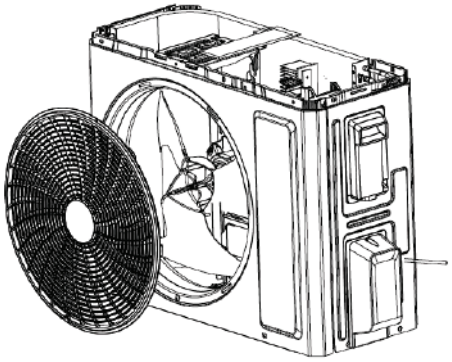	• Unscrew the screws of the front grill with a screwdriver.
3.Remove the front plate.	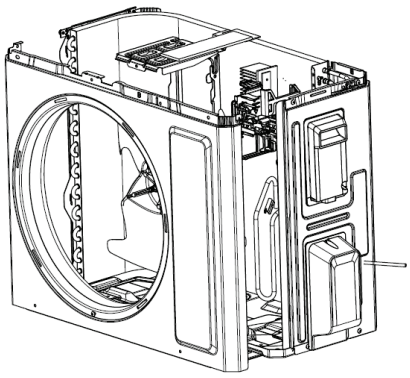	• Unscrew the screws of the front plate with a screwdriver.

Model: ASGE-36BI2-3, ASGE-42BI2-3

Removal of compressor		
Note: Before removing the compressor, make sure there is no refrigerant in the pipeline and power is cut off.		
Step	Picture	Work instruction
1. Remove the panels and wires.	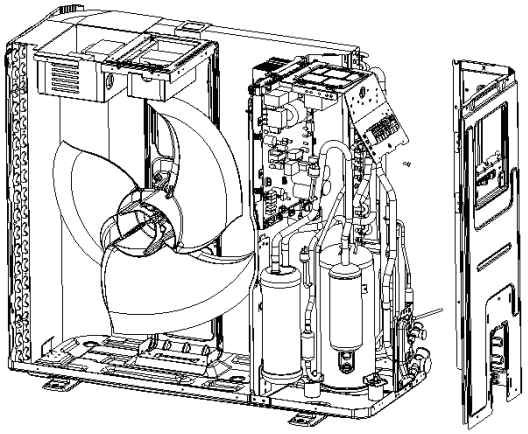	● Remove the upper, lower and front panels. ● Loosen the securing screws of the wires with a screwdriver. ● Remove the wires. Note: When removing the wires, mark the wire terminals corresponding to their color so as to avoid misconnection.
2. Loosen the securing screws at the foot of compressor.	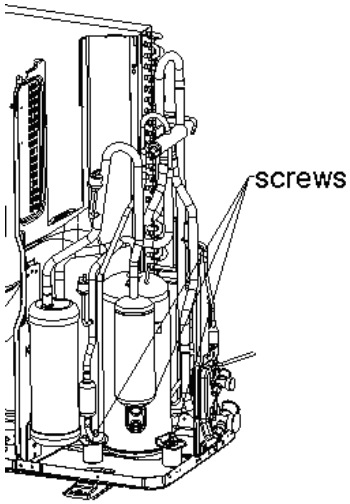	● Use a wrench to twist off the screws at the foot of compressor.
3. Break off the pipes that connecting to the compressor.	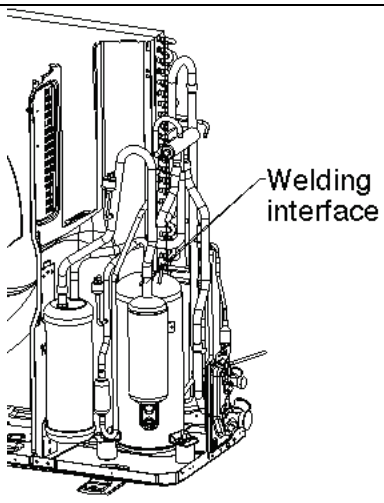	● Weld the pipes that are connected to the compressor. ● Then remove the pipes. Note: When welding the pipes, do not let the flame burn the other components.

Removal of compressor		
Note: Before removing the compressor, make sure there is no refrigerant in the pipeline and power is cut off.		
Step	Picture	Work instruction
4. Remove the compressor from the chassis.	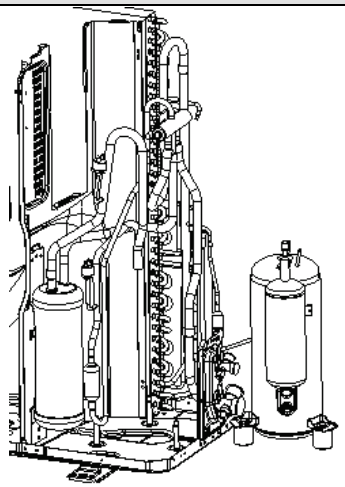	• Take out the compressor and replace it. Note: When replacing the compressor, avoid touching the nearby pipeline and components.
5. Fix the new compressor back onto the chassis.	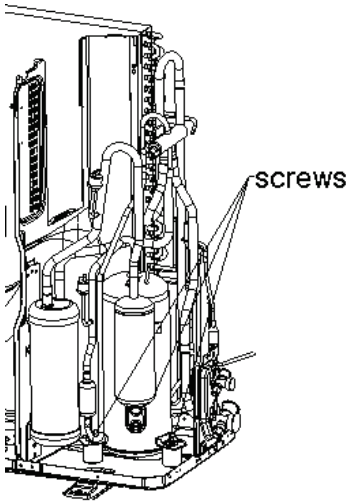	• After replacing the compressor, tighten up the screws at the foot of compressor.
6. Connect the compressor suction port and exhause port with the pipes.	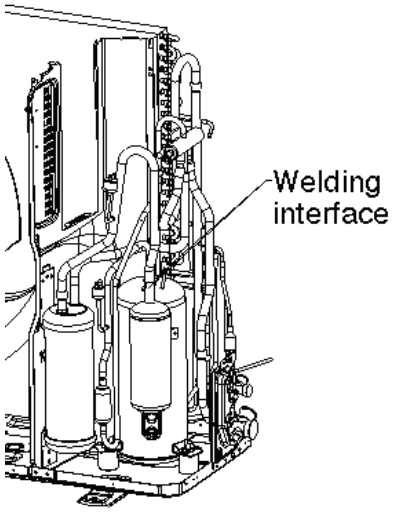	• Weld the compressor connection pipes and connect them to the compressor. Note: When replacing the compressor, avoid touching the nearby pipeline and components.

Removal of compressor		
Note: Before removing the compressor, make sure there is no refrigerant in the pipeline and power is cut off.		
Step	Picture	Work instruction
7. Connect the compressor wires.	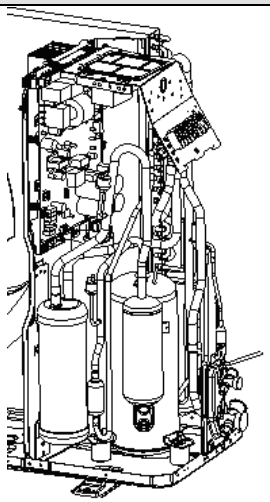	● Connect the compressor wires to the wire terminals on the top of compressor. Note: When connecting the wires, be sure to match the colors with the corresponding wire terminals.

Model: ASGE-36BI2-3, ASGE-42BI2-3

Removal of 4-way valve		
Note: Before removing the 4-way valve, make sure refrigerant is fully discharged from the unit and power is cut off.		
Step	Picture	Work instruction
1. Take off the electromagnetic coil of the 4-way valve.	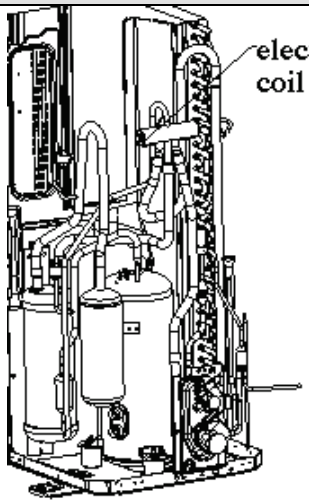	● Carefully unscrew the screws of electromagnetic coil with a screwdriver.
2. Break off the connection pipes from the 4-way valve.	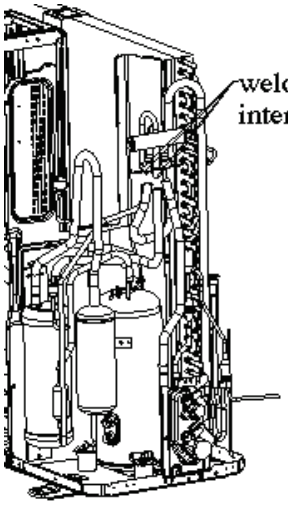	● Use a soldering gun to loosen the 4 joints on the 4-way valve and then remove the connection pipes. Note: When welding the pipes, the 4-way valve should be wrapped with wet cloth for cooling. Do not let the flame burn the other components.

Removal of 4-way valve		
Note: Before removing the 4-way valve, make sure refrigerant is fully discharged from the unit and power is cut off.		
Step	Picture	Work instruction
3. Replace the 4-way valve and connect it to the connection pipes.	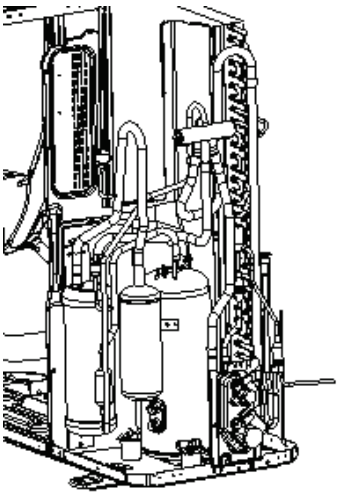	• Replace the 4-way valve and then use a soldering gun to weld the 4 joints of the 4-way valve. • Tighten up the screws of electromagnetic coil with a screwdriver. Note: When welding the pipes, the 4-way valve should be wrapped with wet cloth for cooling. Do not let the flame burn the other components.

Model: ASGE-36BI2, ASGE-42BI2-3

Removal of fan and motor		
Note: Before removing the fan, make sure power is cut off.		
Step	Picture	Work instruction
1. Remove the grill.	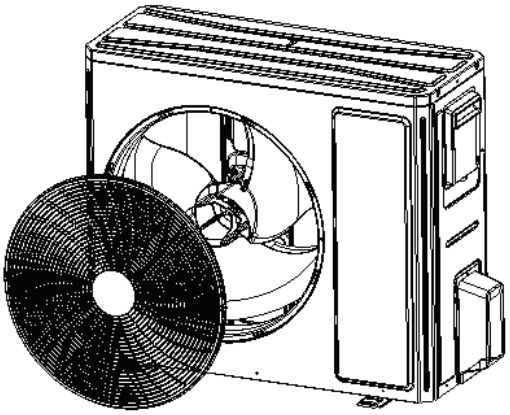	• Use a screwdriver to unscrew the two screws on the upper left and lower right corners.
2. Remove the fan.	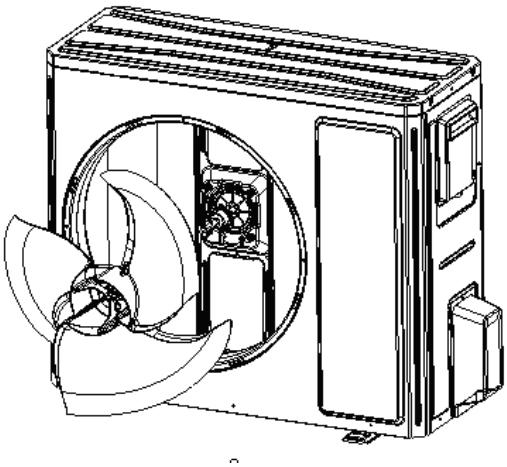	• Use a wrench to remove the specialized nut and gasket of the fan. Note: Please keep the nut and gasket safe after removing them from the fan.

Removal of fan and motor		
Note: Before removing the fan, make sure power is cut off.		
Step	Picture	Work instruction
3. Remove motor.	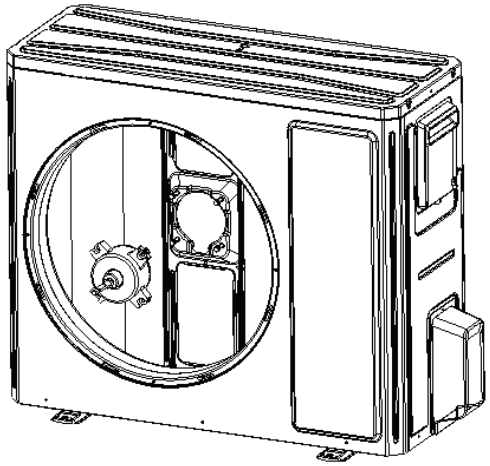	• Use a screwdriver to unscrew the bolt of motor. Note: Motor wire should be first removed from the electric box.

Model: ASGE-36BI2-3, ASGE-42BI2-3

Removal of condenser		
Note: Before removing the condenser, make sure there is no refrigerant in the pipeline and power is cut off.		
Step	Picture	Work instruction
1. Remove the panels.	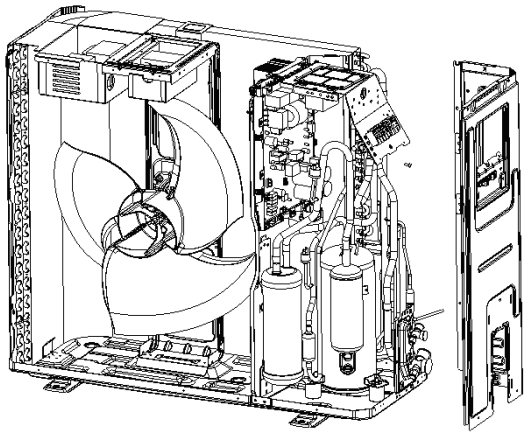	• Remove the upper, lower and front panels.
2. Remove the electric box.	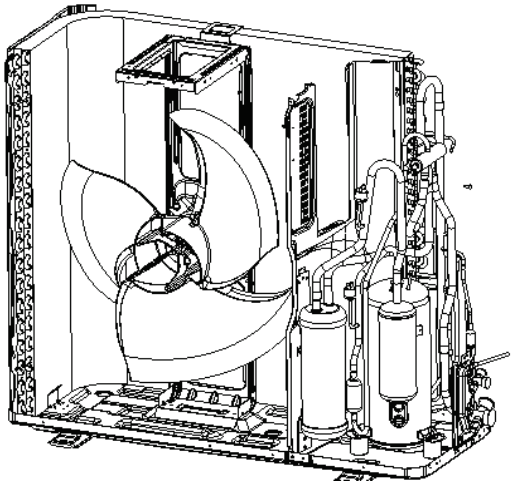	• Loosen the wire clamp at the bottom of the electric box. • Unscrew the screws of electric box. • The connection wires inside and outside the electric box should be removed.

Removal of condenser		
Note: Before removing the condenser, make sure there is no refrigerant in the pipeline and power is cut off.		
Step	Picture	Work instruction
3. Remove motor support.	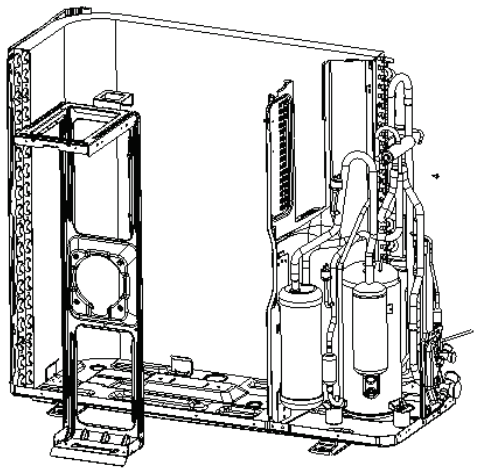	● When removing the motor support, be careful to protect the components.
4. Remove the condenser.	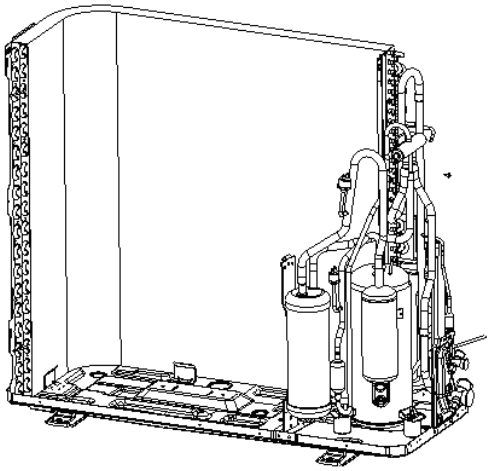	● Heat up the welding points of connection pipes through gas welding until the pipes break off. Note: When welding the pipes, do not let the flame burn the other components. The welding points of condenser are steel and copper welding points. Be sure to maintain the welding quality.
5. Take out the condenser.	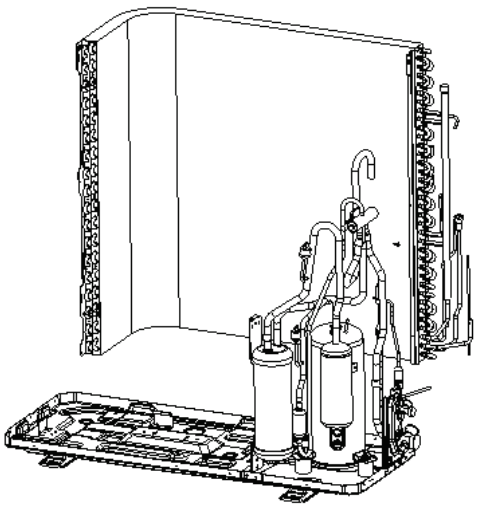	● Loosen the securing screws of condenser support. Take off the plate type heat exchanger and the support as a whole.

Model: ASGE-36BI2-3, ASGE-42BI2-3

Removal of electronic expansion valve		
Note: Before removing the electronic expansion valve, make sure there is no refrigerant in the pipeline and power is cut off.		
Step	Picture	Work instruction
1. Loosen the wire clamp at the bottom of the electric box and the screws of electric box.	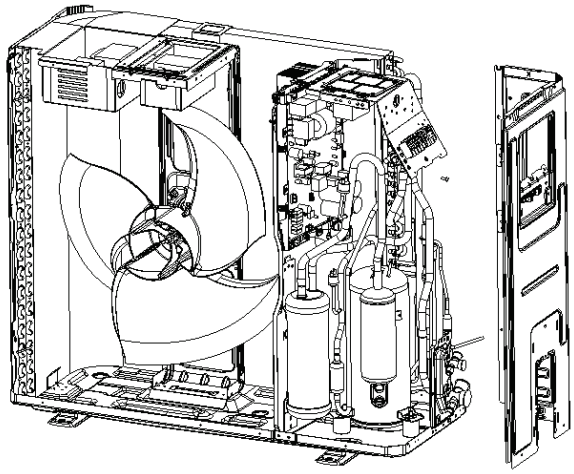	• Remove the upper, lower and front panels. • Loosen the wire clamp at the bottom of the electric box. • Unscrew the screws of electric box.
2. Remove the electric box.	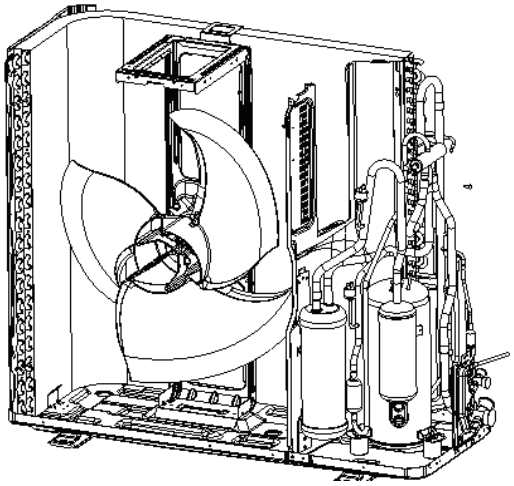	• The connection wires inside and outside the electric box should be removed. • When removing the electric box, be careful to protect the components.
3. Remove the electronic expansion valve.	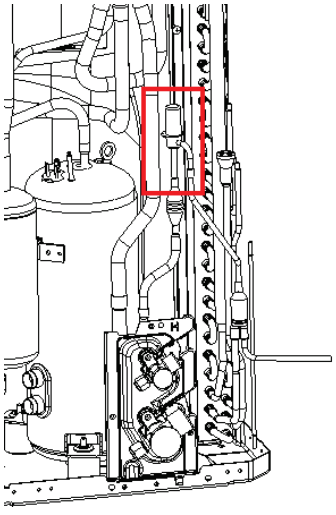	• Take off the coil of electronic expansion valve. • Loosen the connection pipe of electronic expansion valve by welding. Then remove the connection pipe. Note: When welding the pipe, do not let the flame bunt the other components.

Removal of electronic expansion valve		
Note: Before removing the electronic expansion valve, make sure there is no refrigerant in the pipeline and power is cut off.		
Step	Picture	Work instruction
4. Take out the electronic expansion valve.	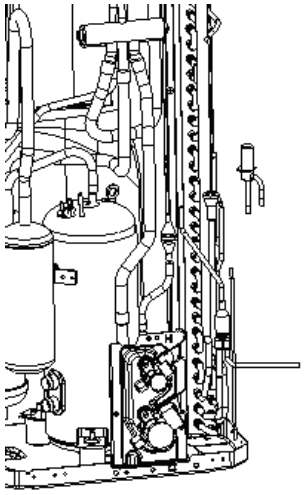	● Take out the electronic expansion valve

Model: ASGE-48BI2

Removal of front panel		
Note: Before removing the front panel, make sure power is cut off.		
Step	Picture	Work instruction
1. Remove the upper cover plate.	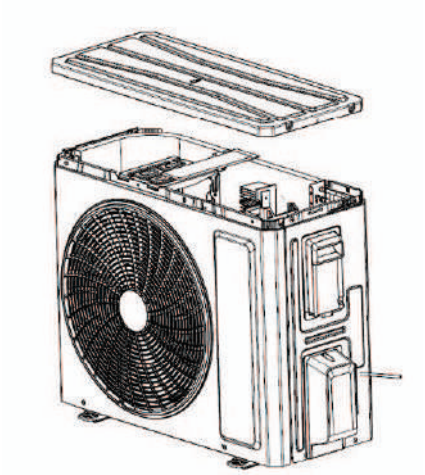	● Unscrew the screws of the upper cover plate with a screwdriver.
2. Remove the front grill.	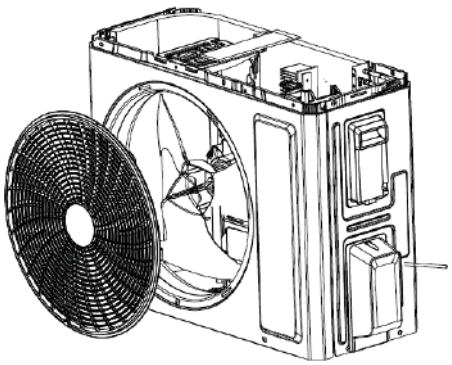	● Unscrew the screws of the front grill with a screwdriver.

Removal of front panel		
Note: Before removing the front panel, make sure power is cut off.		
Step	Picture	Work instruction
3. Remove the front plate.	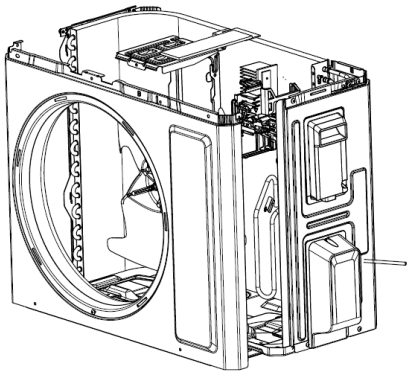	• Unscrew the screws of the front plate with a screwdriver.

Model: ASGE-48BI2

Removal of compressor		
Note: Before removing the compressor, make sure there is no refrigerant in the pipeline and power is cut off.		
Step	Picture	Work instruction
1. Remove the panels and wires.	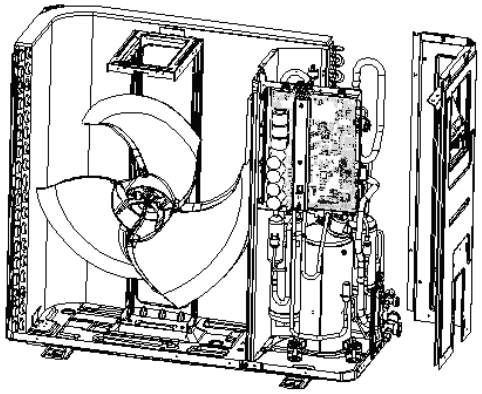	• Remove the upper, lower and front panels. • Loosen the securing screws of the wires with a screwdriver. • Remove the wires. Note: When removing the wires, mark the wire terminals corresponding to their color so as to avoid misconnection.
2. Loosen the securing screws at the foot of compressor.	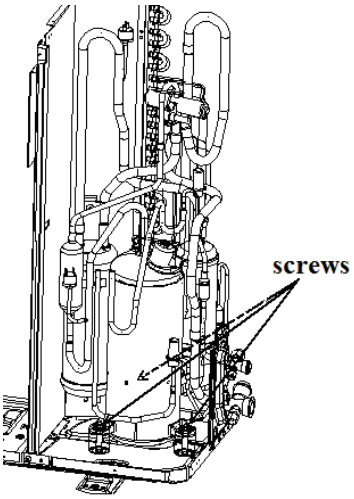	• Use a wrench to twist off the screws at the foot of compressor.

Removal of compressor		
Note: Before removing the compressor, make sure there is no refrigerant in the pipeline and power is cut off.		
Step	Picture	Work instruction
3. Break off the pipes that connecting to the compressor.	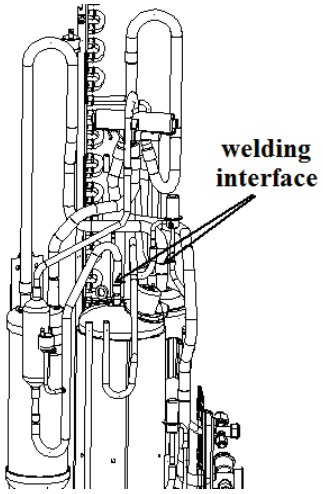	• Weld the pipes that are connected to the compressor. • Then remove the pipes. Note: When welding the pipes, do not let the flame burn the other components.
4. Remove the compressor from the chassis.	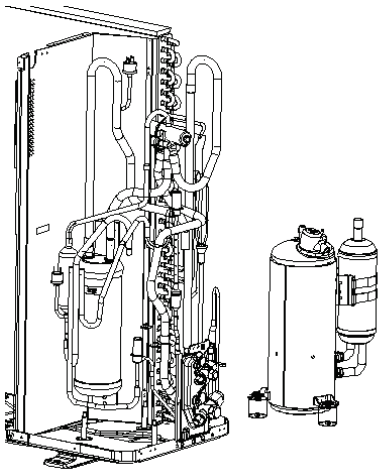	• Take out the compressor and replace it. Note: When replacing the compressor, avoid touching the nearby pipeline and components.
5. Fix the new compressor back onto the chassis.	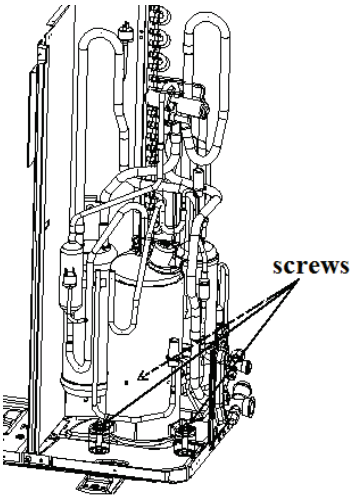	• After replacing the compressor, tighten up the screws at the foot of compressor.

Removal of compressor		
Note: Before removing the compressor, make sure there is no refrigerant in the pipeline and power is cut off.		
Step	Picture	Work instruction
6. Connect the compressor suction port and exhause port with the pipes.	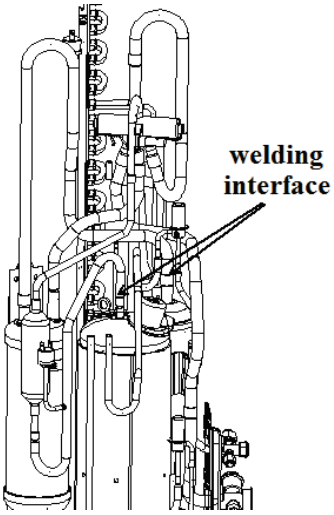	● Weld the compressor connection pipes and connect them to the compressor. Note: When replacing the compressor, avoid touching the nearby pipeline and components.
7. Connect the compressor wires.	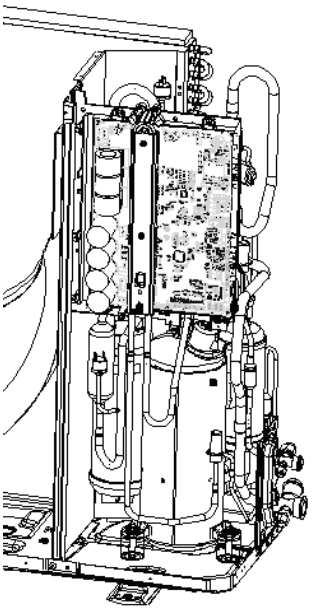	● Connect the compressor wires to the wire terminals on the top of compressor. Note: When connecting the wires, be sure to match the colors with the corresponding wire terminals.

Model: ASGE-48BI2

Removal of 4-way valve		
Note: Before removing the 4-way valve, make sure refrigerant is fully discharged from the unit and power is cut off.		
Step	Picture	Work instruction
1. Take off the electromagnetic coil of the 4-way valve.	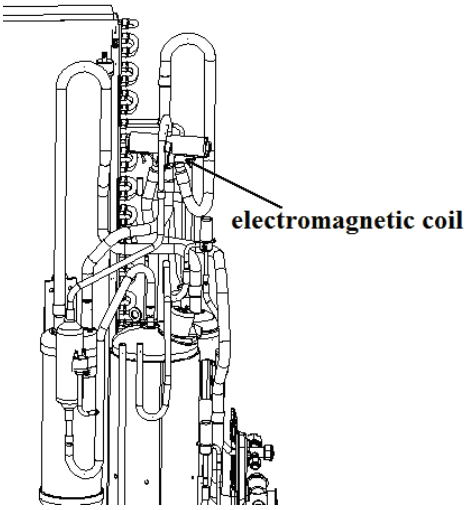	● Carefully unscrew the screws of electromagnetic coil with a screwdriver.
2. Break off the connection pipes from the 4-way valve.	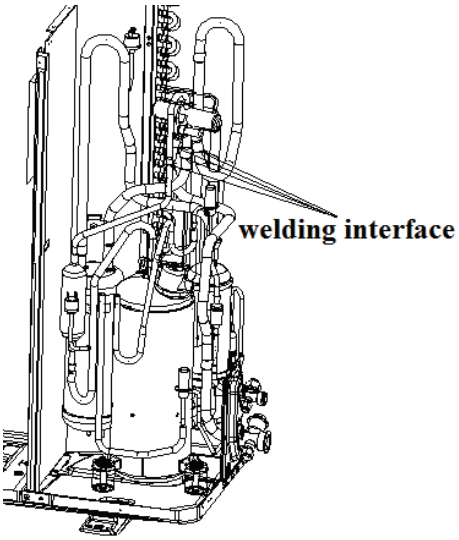	● Use a soldering gun to loosen the 4 joints on the 4-way valve and then remove the connection pipes. Note: When welding the pipes, the 4-way valve should be wrapped with wet cloth for cooling. Do not let the flame burn the other components.
3. Replace the 4-way valve and connect it to the connection pipes.	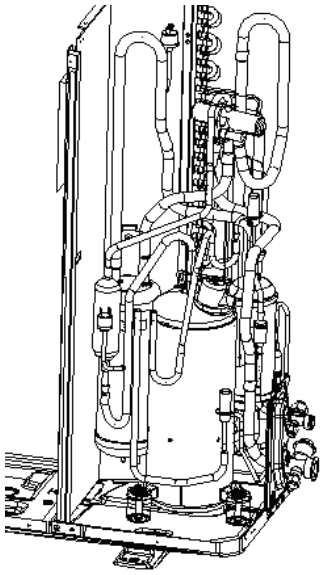	● Replace the 4-way valve and then use a soldering gun to weld the 4 joints of the 4-way valve. ● Tighten up the screws of electromagnetic coil with a screwdriver. Note: When welding the pipes, the 4-way valve should be wrapped with wet cloth for cooling. Do not let the flame burn the other components.

Model: ASGE-48BI2

Removal of fan and motor		
Note: Before removing the fan, make sure power is cut off.		
Step	Picture	Work instruction
1. Remove the grill.	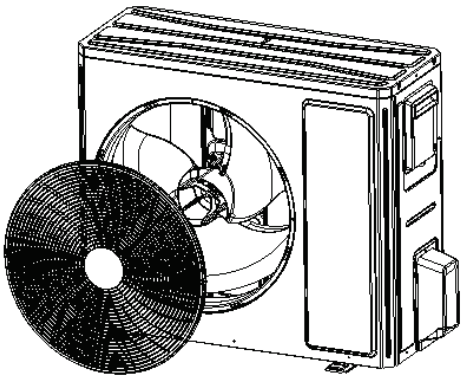	● Use a screwdriver to unscrew the two screws on the upper left and lower right corners.
2. Remove the fan.	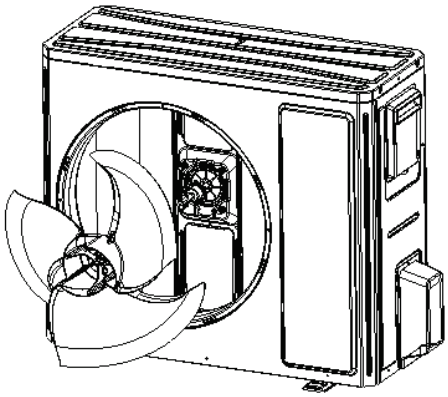	● Use a wrench to remove the specialized nut and gasket of the fan. Note: Please keep the nut and gasket safe after removing them from the fan.
3. Remove motor.	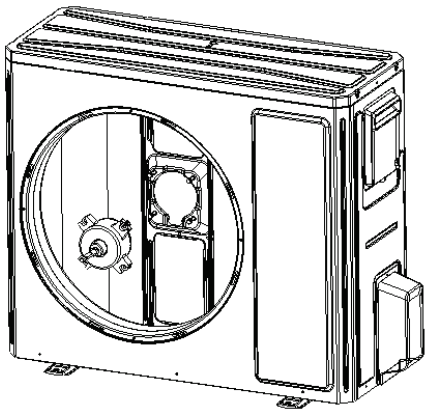	● Use a screwdriver to unscrew the bolt of motor. Note: Motor wire should be first removed from the electric box.

Model: ASGE-48BI2

Removal of condenser		
Note: Before removing the condenser, make sure there is no refrigerant in the pipeline and power is cut off.		
Step	Picture	Work instruction
1. Remove the panels.	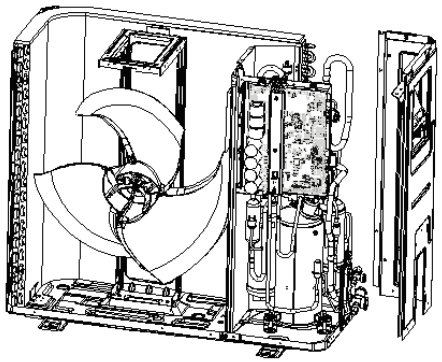	● Remove the upper, lower and front panels.
2. Remove the electric box.	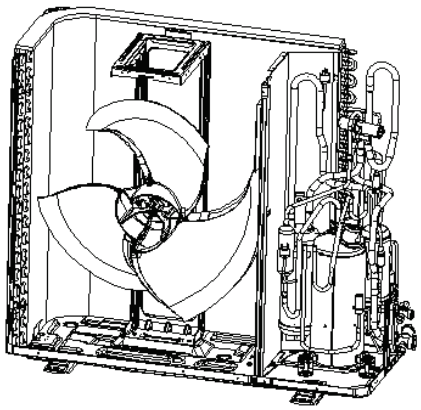	● Loosen the wire clamp at the bottom of the electric box. ● Unscrew the screws of electric box. ● The connection wires inside and outside the electric box should be removed.
3. Remove motor support.	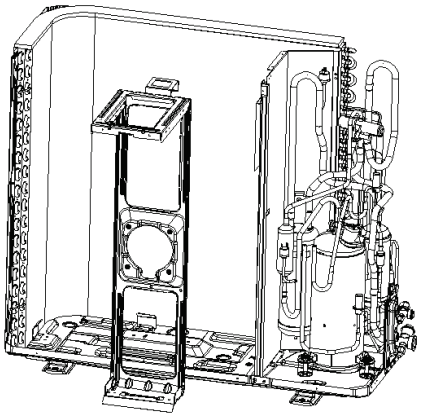	● When removing the motor support, be careful to protect the components.

Removal of condenser		
Note: Before removing the condenser, make sure there is no refrigerant in the pipeline and power is cut off.		
Step	Picture	Work instruction
4. Remove the condenser.	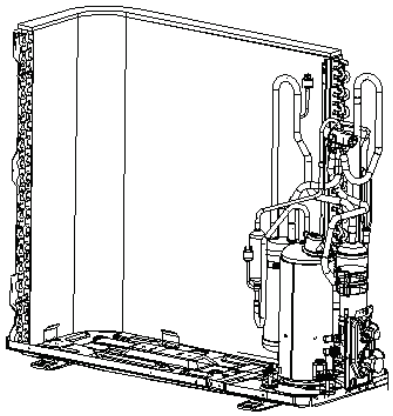	• Heat up the welding points of connection pipes through gas welding until the pipes break off. Note: When welding the pipes, do not let the flame burn the other components. The welding points of condenser are steel and copper welding points. Be sure to maintain the welding quality.
5. Take out the condenser.	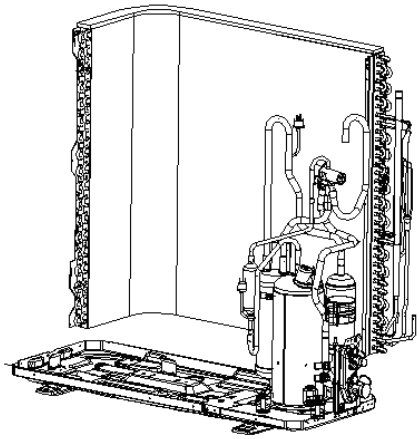	• Loosen the securing screws of condenser support. Take off the plate type heat exchanger and the support as a whole.

Model: ASGE-48BI2

Removal of electronic expansion valve		
Note: Before removing the electronic expansion valve, make sure there is no refrigerant in the pipeline and power is cut off.		
Step	Picture	Work instruction
1. Loosen the wire clamp at the bottom of the electric box and the screws of electric box.	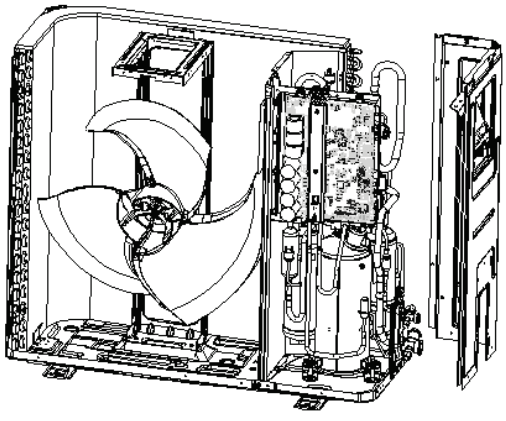	• Remove the upper, lower and front panels. • Loosen the wire clamp at the bottom of the electric box. • Unscrew the screws of electric box.

Removal of electronic expansion valve		
Note: Before removing the electronic expansion valve, make sure there is no refrigerant in the pipeline and power is cut off.		
Step	Picture	Work instruction
2. Remove the electric box.	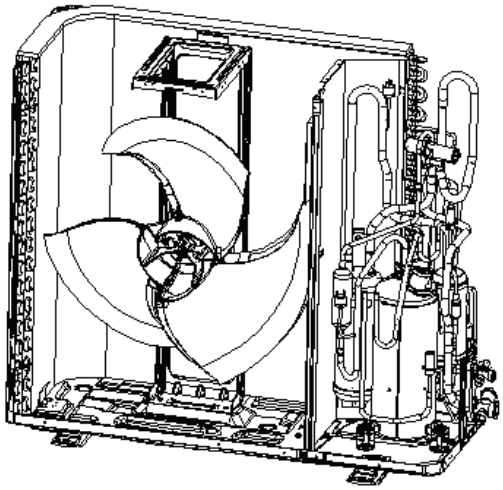	• The connection wires inside and outside the electric box should be removed. • When removing the electric box, be careful to protect the components.
3. Remove the electronic expansion valve.	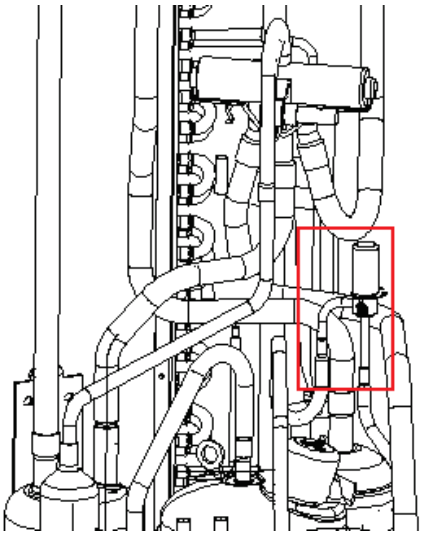	• Take off the coil of electronic expansion valve. • Loosen the connection pipe of electronic expansion valve by welding. Then remove the connection pipe. Note: When welding the pipe, do not let the flame bunt the other components.
4. Take out the electronic expansion valve.	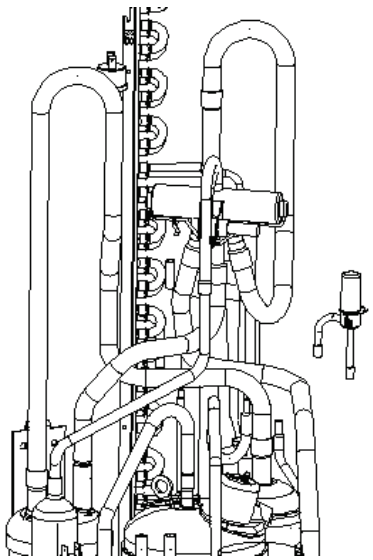	• Take out the electronic expansion valve

Model: ASGE-48BI2-3, ASGE-60BI2-3

Removal of front panel		
Note: Before removing the front panel, make sure power is cut off.		
Step	Picture	Work instruction
1. Remove the upper cover plate.	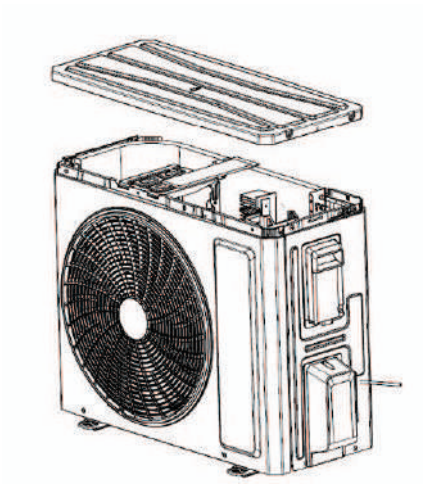	• Unscrew the screws of the upper cover plate with a screwdriver.
2. Remove the front grill.	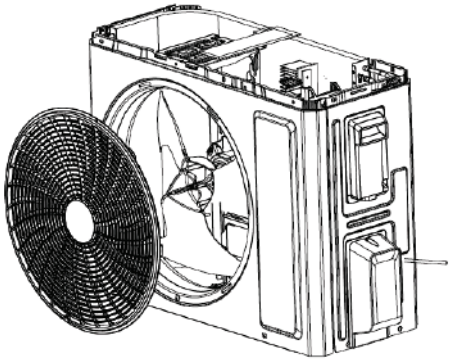	• Unscrew the screws of the front grill with a screwdriver.
3. Remove the front plate.	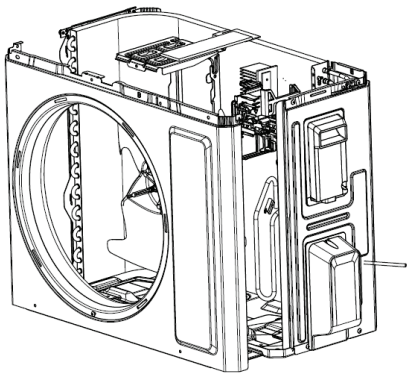	• Unscrew the screws of the front plate with a screwdriver.

Model: ASGE-48BI2-3, ASGE-60BI2-3

Removal of compressor		
Note: Before removing the compressor, make sure there is no refrigerant in the pipeline and power is cut off.		
Step	Picture	Work instruction
1. Remove the panels and wires.	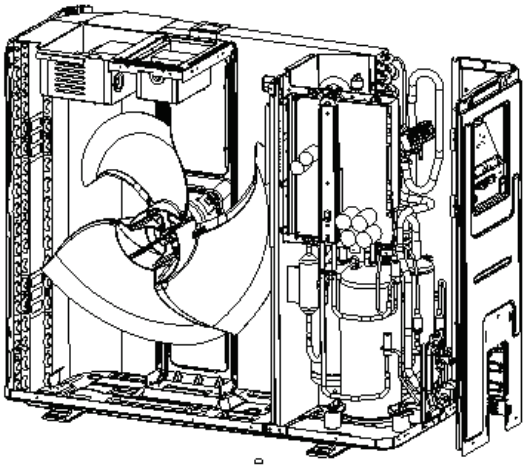	• Remove the upper, lower and front panels. • Loosen the securing screws of the wires with a screwdriver. • Remove the wires. Note: When removing the wires, mark the wire terminals corresponding to their color so as to avoid misconnection.
2. Loosen the securing screws at the foot of compressor.	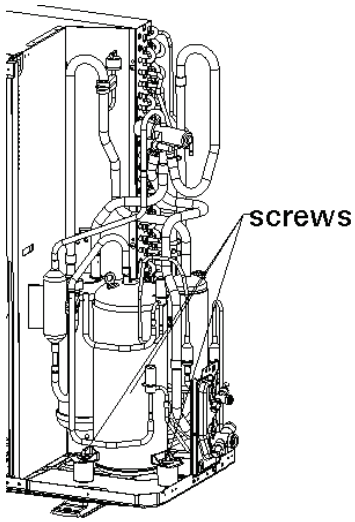	• Use a wrench to twist off the screws at the foot of compressor.
3. Break off the pipes that connecting to the compressor.	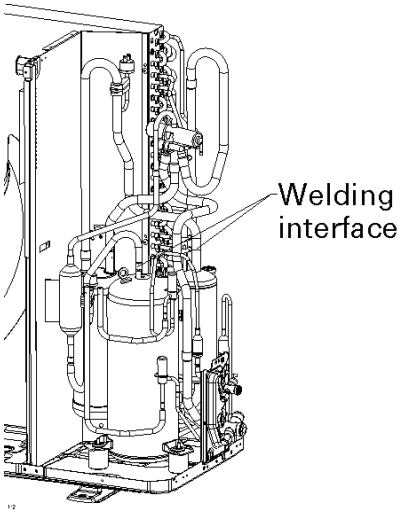	• Weld the pipes that are connected to the compressor. • Then remove the pipes. Note: When welding the pipes, do not let the flame burn the other components.

Removal of compressor		
Note: Before removing the compressor, make sure there is no refrigerant in the pipeline and power is cut off.		
Step	Picture	Work instruction
4. Remove the compressor from the chassis.	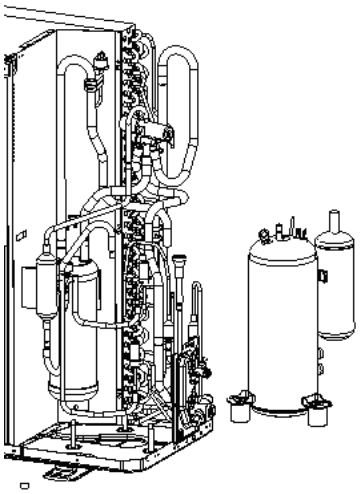	● Take out the compressor and replace it. Note: When replacing the compressor, avoid touching the nearby pipeline and components.
5. Fix the new compressor back onto the chassis.	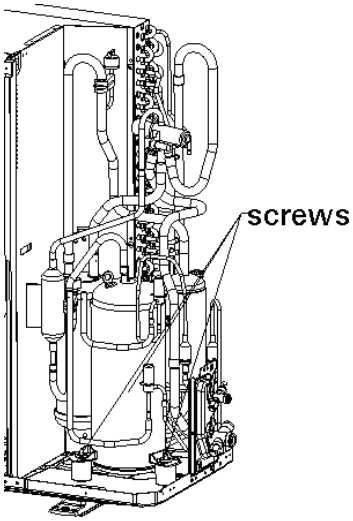	● After replacing the compressor, tighten up the screws at the foot of compressor.
6. Connect the compressor suction port and exhause port with the pipes.	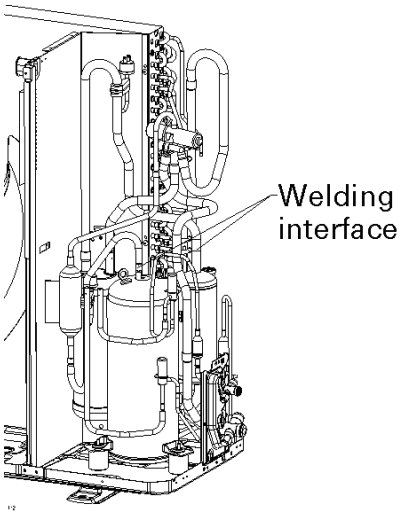	● Weld the compressor connection pipes and connect them to the compressor. Note: When replacing the compressor, avoid touching the nearby pipeline and components.

Removal of compressor		
Note: Before removing the compressor, make sure there is no refrigerant in the pipeline and power is cut off.		
Step	Picture	Work instruction
7. Connect the compressor wires.	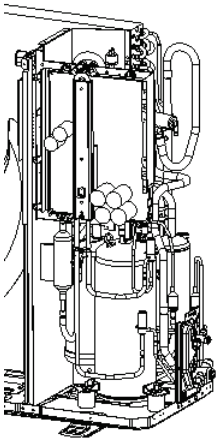	● Connect the compressor wires to the wire terminals on the top of compressor. Note: When connecting the wires, be sure to match the colors with the corresponding wire terminals.

Model: ASGE-48BI2-3, ASGE-60BI2-3

Removal of 4-way valve		
Note: Before removing the 4-way valve, make sure refrigerant is fully discharged from the unit and power is cut off.		
Step	Picture	Work instruction
1. Take off the electromagnetic coil of the 4-way valve.	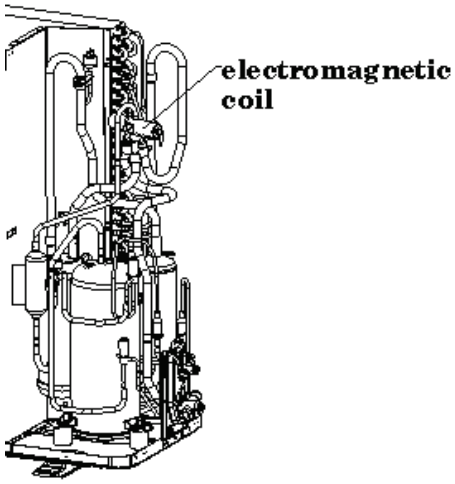	● Carefully unscrew the screws of electromagnetic coil with a screwdriver.
2. Break off the connection pipes from the 4-way valve.	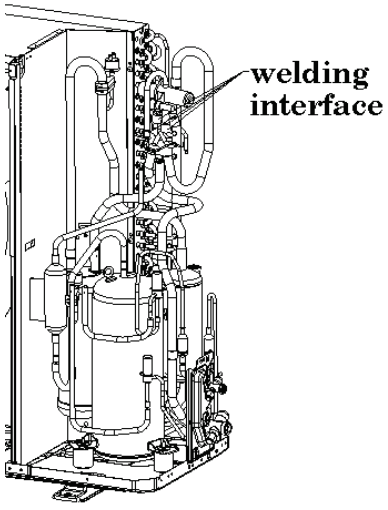	● Use a soldering gun to loosen the 4 joints on the 4-way valve and then remove the connection pipes. Note: When welding the pipes, the 4-way valve should be wrapped with wet cloth for cooling. Do not let the flame burn the other components.

Removal of 4-way valve		
Note: Before removing the 4-way valve, make sure refrigerant is fully discharged from the unit and power is cut off.		
Step	Picture	Work instruction
3. Replace the 4-way valve and connect it to the connection pipes.	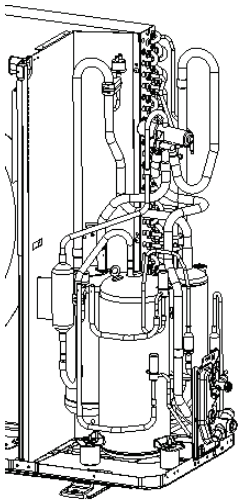	• Replace the 4-way valve and then use a soldering gun to weld the 4 joints of the 4-way valve. • Tighten up the screws of electromagnetic coil with a screwdriver. Note: When welding the pipes, the 4-way valve should be wrapped with wet cloth for cooling. Do not let the flame burn the other components.

Model: ASGE-48BI2-3, ASGE-60BI2-3

Removal of fan and motor		
Note: Before removing the fan, make sure power is cut off.		
Step	Picture	Work instruction
1. Remove the grill.	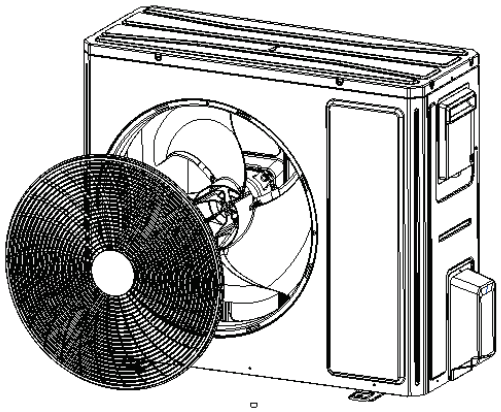	• Use a screwdriver to unscrew the two screws on the upper left and lower right corners.
2. Remove the fan.	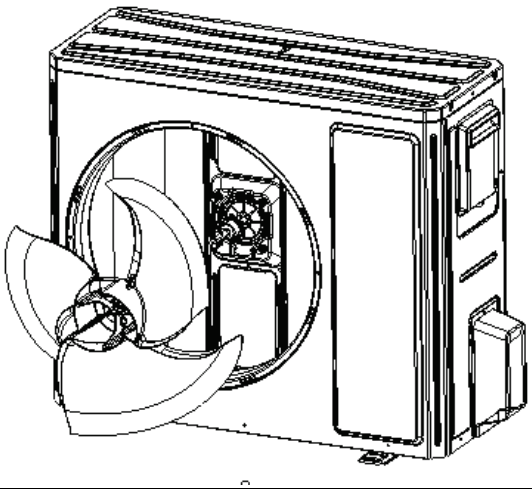	• Use a wrench to remove the specialized nut and gasket of the fan. Note: Please keep the nut and gasket safe after removing them from the fan.

Removal of fan and motor		
Note: Before removing the fan, make sure power is cut off.		
Step	Picture	Work instruction
3. Remove motor.	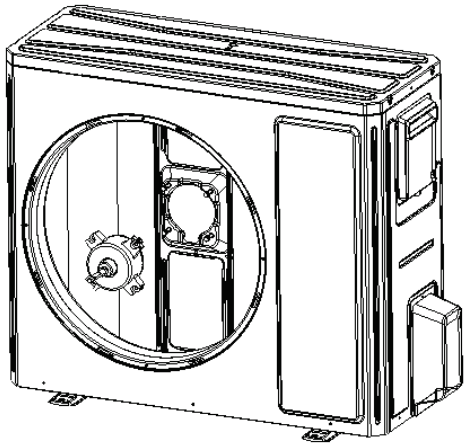	• Use a screwdriver to unscrew the bolt of motor. Note: Motor wire should be first removed from the electric box.

Model: ASGE-48BI2-3, ASGE-60BI2-3

Removal of condenser		
Note: Before removing the condenser, make sure there is no refrigerant in the pipeline and power is cut off.		
Step	Picture	Work instruction
1. Remove the panels.	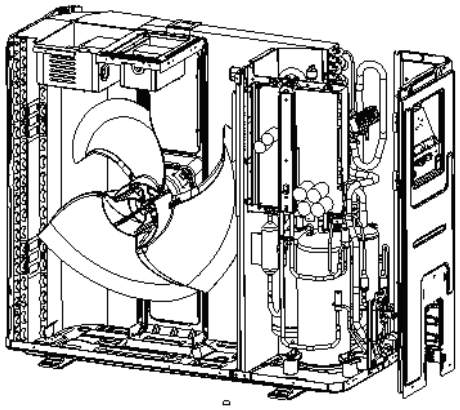	• Remove the upper, lower and front panels.
2. Remove the electric box.	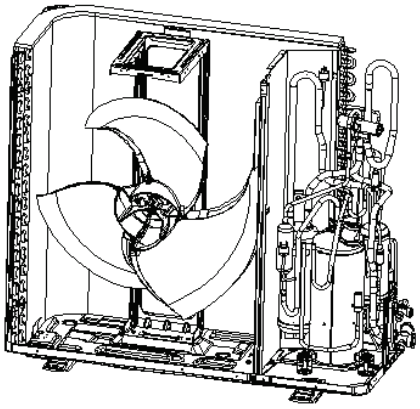	• Loosen the wire clamp at the bottom of the electric box. • Unscrew the screws of electric box. • The connection wires inside and outside the electric box should be removed.

Removal of condenser		
Note: Before removing the condenser, make sure there is no refrigerant in the pipeline and power is cut off.		
Step	Picture	Work instruction
3. Remove motor support.	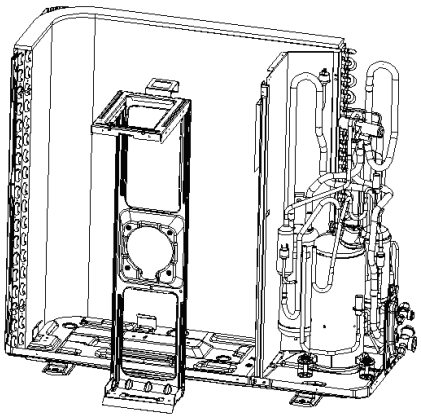	● When removing the motor support, be careful to protect the components.
4. Remove the condenser.	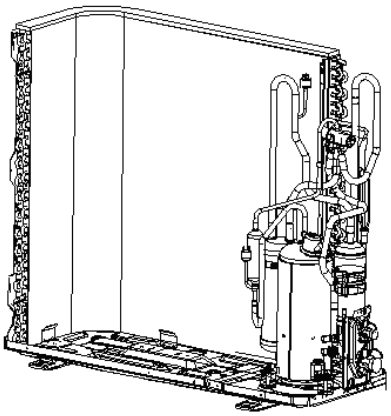	● Heat up the welding points of connection pipes through gas welding until the pipes break off. Note: When welding the pipes, do not let the flame burn the other components. The welding points of condenser are steel and copper welding points. Be sure to maintain the welding quality.
5. Take out the condenser.	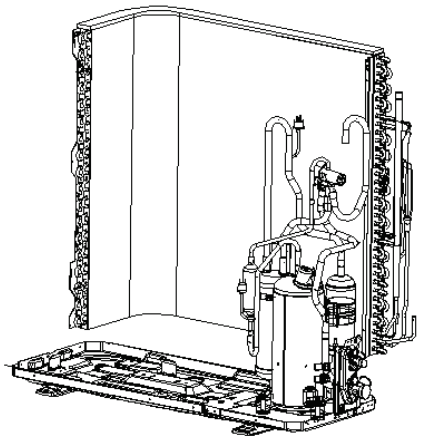	● Loosen the securing screws of condenser support. Take off the plate type heat exchanger and the support as a whole.

Model: ASGE-48BI2-3, ASGE-60BI2-3

Removal of electronic expansion valve		
Note: Before removing the electronic expansion valve, make sure there is no refrigerant in the pipeline and power is cut off.		
Step	Picture	Work instruction
1. Loosen the wire clamp at the bottom of the electric box and the screws of electric box.	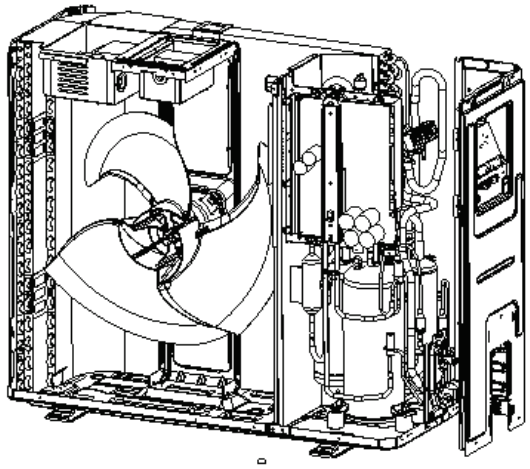	• Remove the upper, lower and front panels. • Loosen the wire clamp at the bottom of the electric box. • Unscrew the screws of electric box.
2. Remove the electric box.	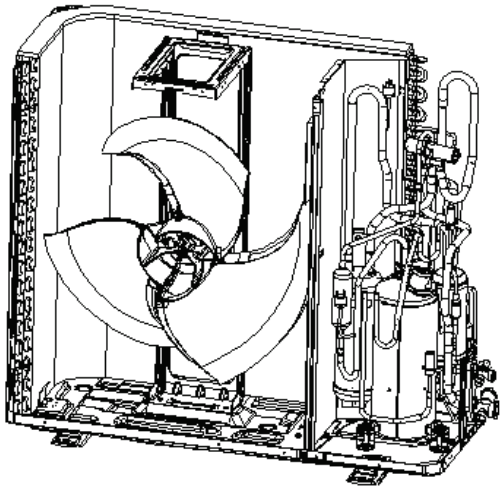	• The connection wires inside and outside the electric box should be removed. • When removing the electric box, be careful to protect the components.
3. Remove the electronic expansion valve.	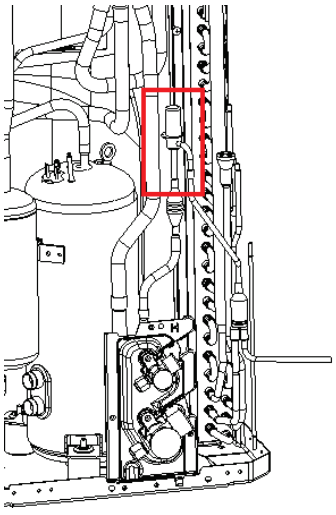	• Take off the coil of electronic expansion valve. • Loosen the connection pipe of electronic expansion valve by welding. Then remove the connection pipe. Note: When welding the pipe, do not let the flame bunt the other components.

Removal of electronic expansion valve		
Note: Before removing the electronic expansion valve, make sure there is no refrigerant in the pipeline and power is cut off.		
Step	Picture	Work instruction
4. Take out the electronic expansion valve.	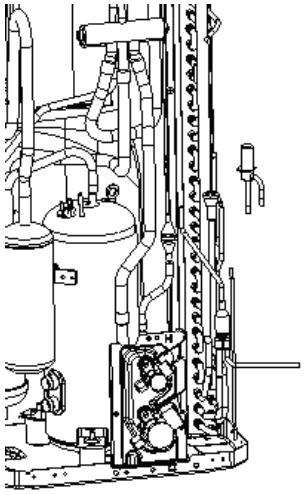	● Take out the electronic expansion valve

4.5.2 Removal of IDU Major Components

4.5.2.1 Cassette Type Unit

Model: ASC-12BI2, ASC-18BI2

<table>
<tr><td colspan="3">Removal of fan and motor</td></tr>
<tr><td colspan="3">Note: Before removing the motor, power must be cut off.</td></tr>
<tr><td>Step</td><td>Picture</td><td>Work instruction</td></tr>
<tr><td rowspan="2">1. Remove the front panel.</td><td>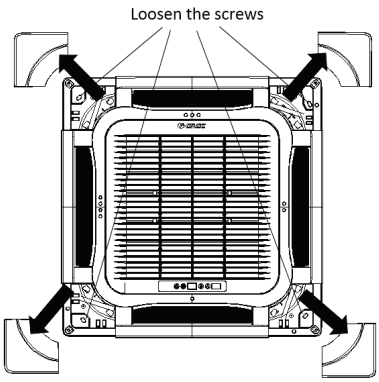
</td><td rowspan="2">Turn off the power supply of indoor unit.
Push the 4 corner plates in the directions shown by the arrows.
Loosen the screws and remove the front panel.</td></tr>
<tr><td>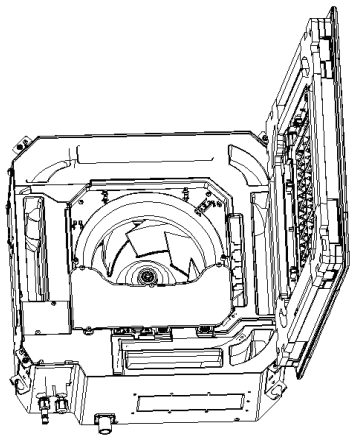</td></tr>
<tr><td>2. Remove the cover of electric box and the clamp of power cord.</td><td>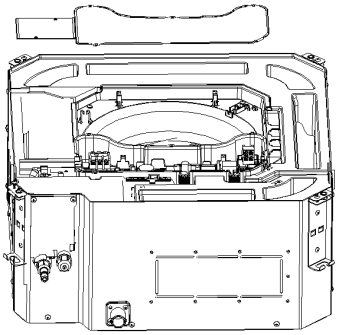</td><td>Remove the motor wire and water pump of the electric box.</td></tr>
</table>

Removal of fan and motor		
Note: Before removing the motor, power must be cut off.		
Step	Picture	Work instruction
3. Remove the water tray.	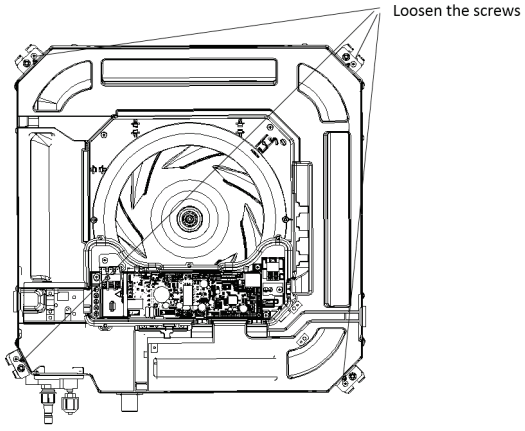  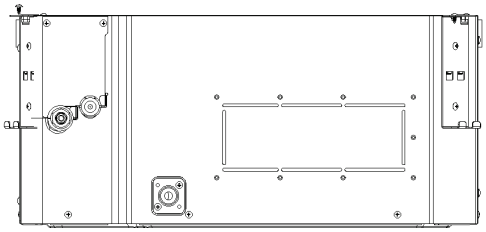	● Loosen the screws in the 4 corners and then remove the water tray.
4. Remove the fan.	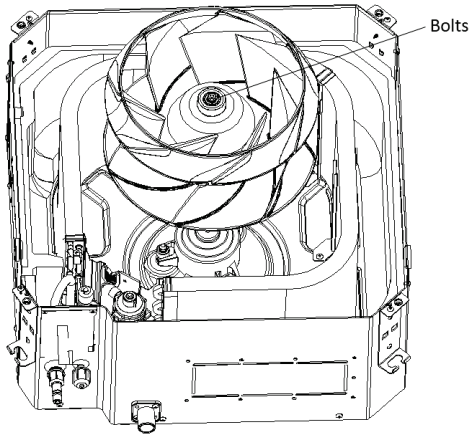	● Use a screwdriver to remove the clamping band of motor. Then remove the fan.

Removal of fan and motor		
Note: Before removing the motor, power must be cut off.		
Step	Picture	Work instruction
5. Remove motor.	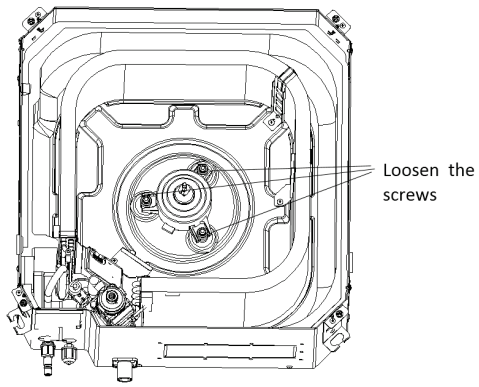 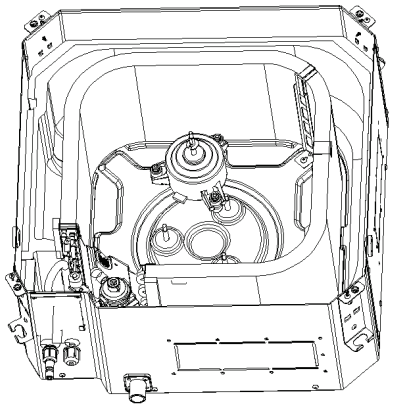	● Use a screwdriver to unscrew the 4 screws of motor. Then remove the motor.
6. Replace and install the motor.	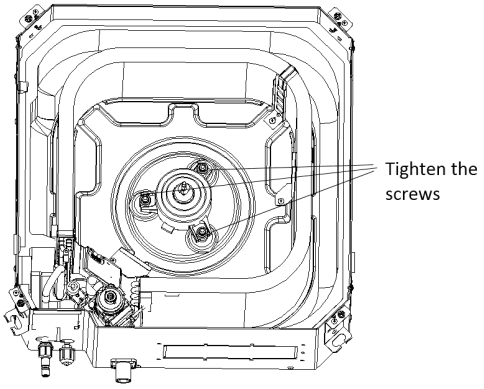	● Remove the motor from motor support and then replace with a new motor. ● Tighten the 4 screws of motor with a screwdriver.
7. Install the fan.	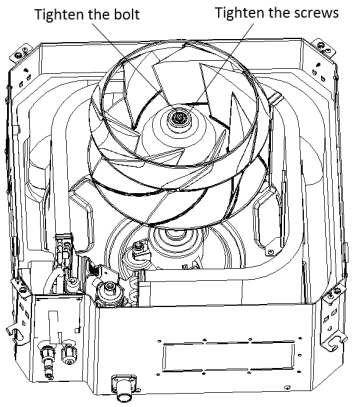	● Direct the hole of fan to the motor shaft and then mount on the fan. ● Tighten the clamping band of motor with a wrench.

Removal of fan and motor		
Note: Before removing the motor, power must be cut off.		
Step	Picture	Work instruction
8. Install the water tray and electric box.	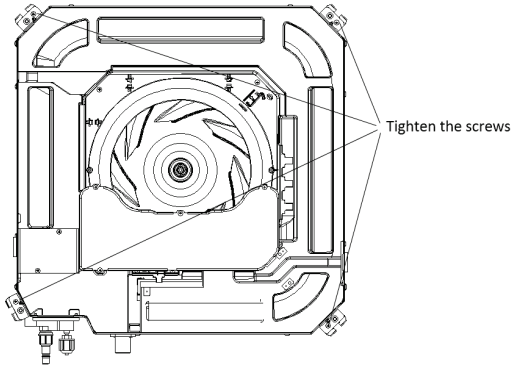	• Direct the 4 corners of water tray to the 4 corners of the unit and then press them. Use a screwdriver to tighten the screws in the 4 corners. • Connect the power cord and water pump wire. • Place back the cover of electric box and the clamp of power cord. Then tighten the screws with a screwdriver.

Take model ASC-24BI2 as an example.

Removal of fan and motor		
Note: Before removing the motor, power must be cut off.		
Step	Picture	Work instruction
1. Remove the front panel.	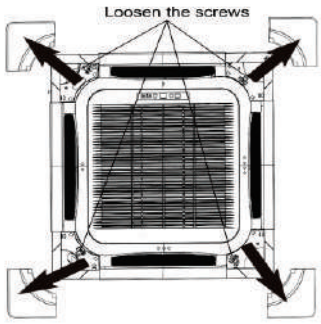 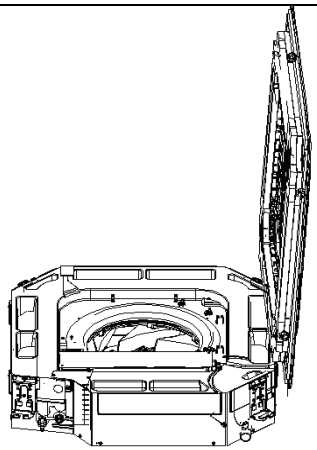	• Turn off the power supply of indoor unit. • Push the 4 corner plates in the directions shown by the arrows. • Loosen the screws and remove the front panel.
2. Remove the cover of electric box and the clamp of power cord.	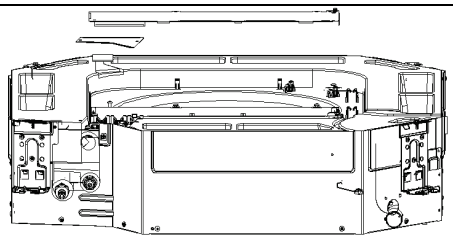	• Remove the motor wire and water pump of the electric box.

Removal of fan and motor		
Note: Before removing the motor, power must be cut off.		
Step	Picture	Work instruction
3. Remove the water tray.	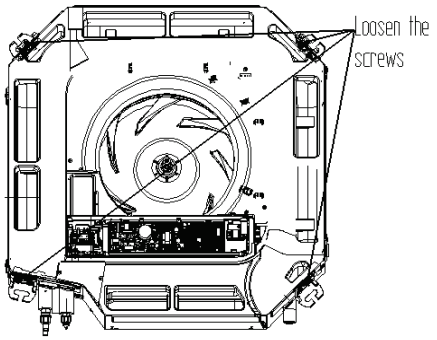  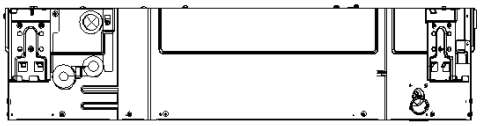	● Loosen the screws in the 4 corners and then remove the water tray.
4. Remove the fan.	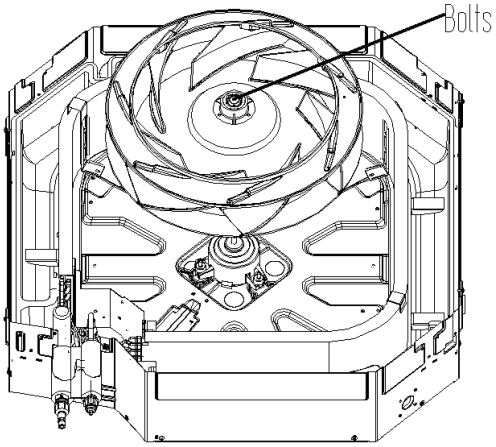	● Use a screwdriver to remove the clamping band of motor. Then remove the fan.

Removal of fan and motor		
Note: Before removing the motor, power must be cut off.		
Step	Picture	Work instruction
5. Remove motor.	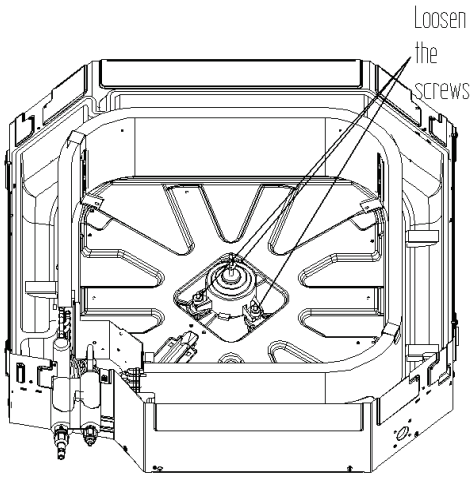 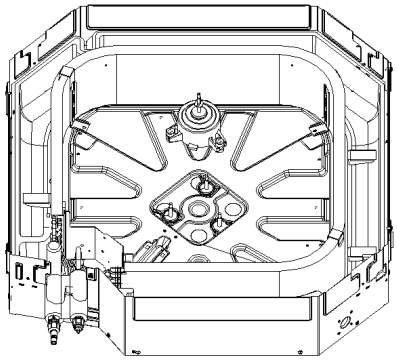	● Use a screwdriver to unscrew the 4 screws of motor. Then remove the motor.
6. Replace and install the motor.	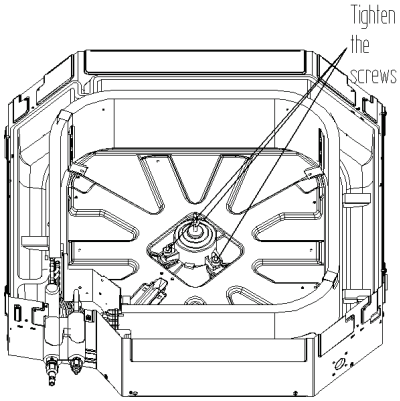	● Remove the motor from motor support and then replace with a new motor. ● Tighten the 4 screws of motor with a screwdriver.

Removal of fan and motor		
Note: Before removing the motor, power must be cut off.		
Step	Picture	Work instruction
7. Install the fan.	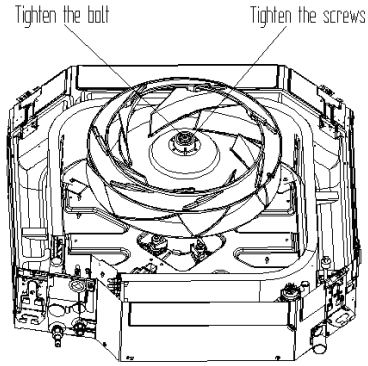	• Direct the hole of fan to the motor shaft and then mount on the fan. • Tighten the clamping band of motor with a wrench.
8. Install the water tray and electric box.	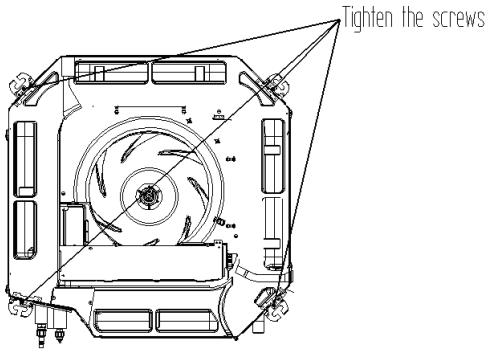	• Direct the 4 corners of water tray to the 4 corners of the unit and then press them. Use a screwdriver to tighten the screws in the 4 corners. • Connect the power cord and water pump wire. • Place back the cover of electric box and the clamp of power cord. Then tighten the screws with a screwdriver.

4.5.2.2 Duct Type Unit

Take model ASD-12BI2 as an example.

Removal of fan and motor		
Note: Before removing the motor, make sure power is cut off.		
Step	Picture	Work instruction
1. Remove the cover of electric box.	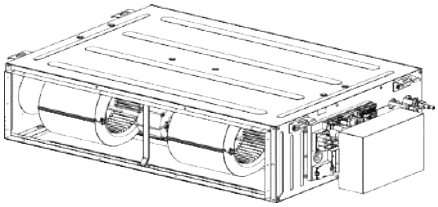	• Turn off the power supply of indoor unit. Use a screwdriver to remove the cover of electric box. Disconnect the motor wire inside the electric box.
2. Remove air return plate, the longitudinal component and air return frame.	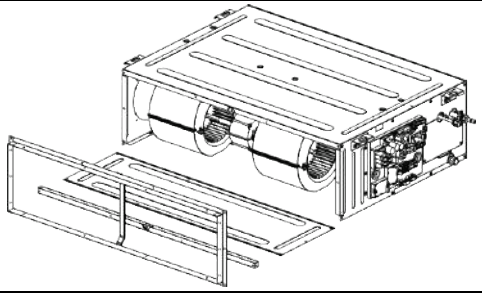	• Use a hex wrench to loosen the screws of fan. • Order of removal: air return plate, air return frame, longitudinal component, cross beam

Removal of fan and motor		
Note: Before removing the motor, make sure power is cut off.		
Step	Picture	Work instruction
3. Remove the upper volute.	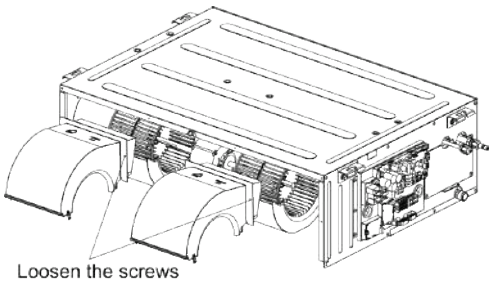	● Loosen the screws of upper volute and then pull out the upper volute.
4. Remove the lower volute.	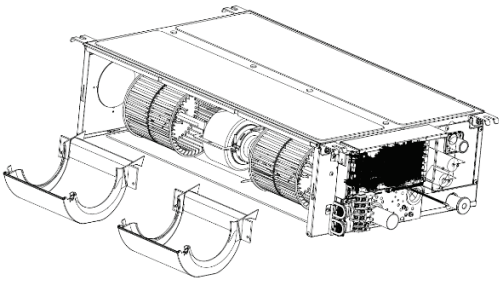	● Loosen the screws of lower volute and then rotate in the direction shown by the arrow.
5. Remove the motor and fans.	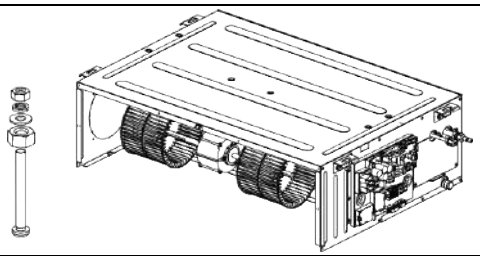	● Use a screwdriver to remove the clamping band of motor. Then remove the motor and fan as a whole.
6. Replace the motor.	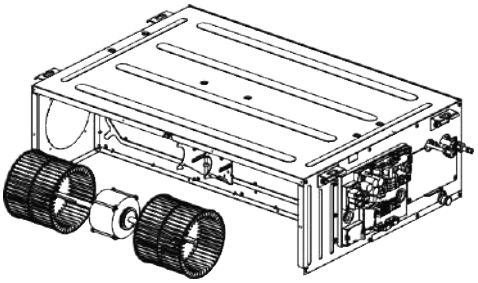	● Remove the motor from the motor support. ● Use a hex wrench to loosen the screws of fan. ● Remove the fan from the motor. ● Replace with a new motor.
7. Re-install the device in a reverse order of the removal procedure.	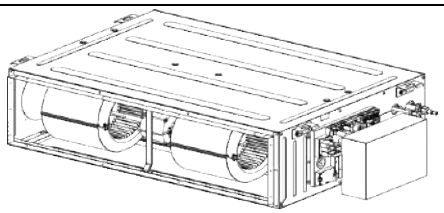	● Re-install the device in a reverse order of the removal procedure. Then connect power and test it.

Take model ASD-24BI2 as an example:

Removal of fan and motor		
Note: Before removing the motor, make sure power is cut off.		
Step	Picture	Work instruction
1. Remove the cover of electric box.	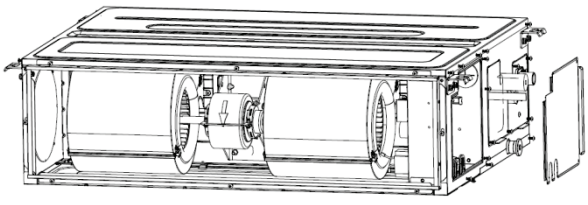	● Turn off the power supply of indoor unit. Use a screwdriver to remove the cover of electric box. Disconnect the motor wire inside the electric box.

Removal of fan and motor		
Note: Before removing the motor, make sure power is cut off.		
Step	Picture	Work instruction
2. Remove air return plate, the longitudinal component and air return frame.	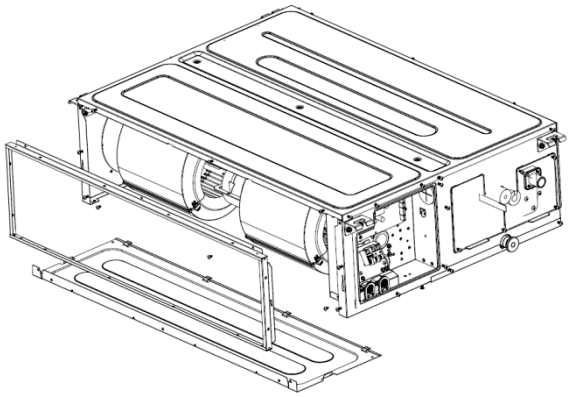	• Use a hex wrench to loosen the screws of fan. • Order of removal: air return plate, air return frame, longitudinal component, cross beam
3. Remove the upper volute.	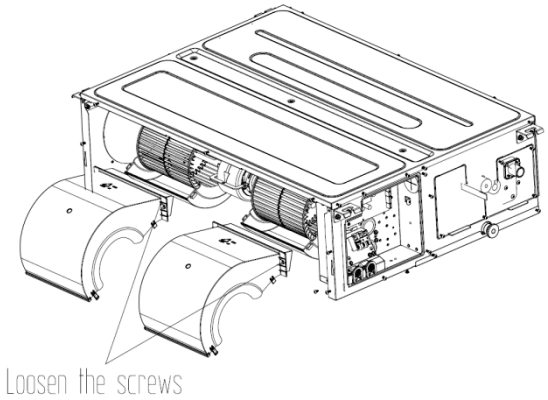	• Loosen the screws of upper volute and then pull out the upper volute.
4. Remove the lower volute.	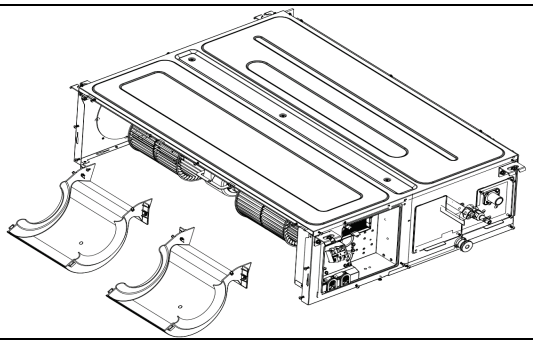	• Loosen the screws of lower volute and then rotate in the direction shown by the arrow.
5. Remove the motor and fans.	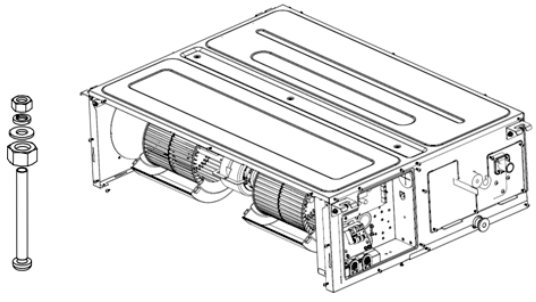	• Use a screwdriver to remove the clamping band of motor. Then remove the motor and fan as a whole.

Removal of fan and motor		
Note: Before removing the motor, make sure power is cut off.		
Step	Picture	Work instruction
6. Replace the motor.	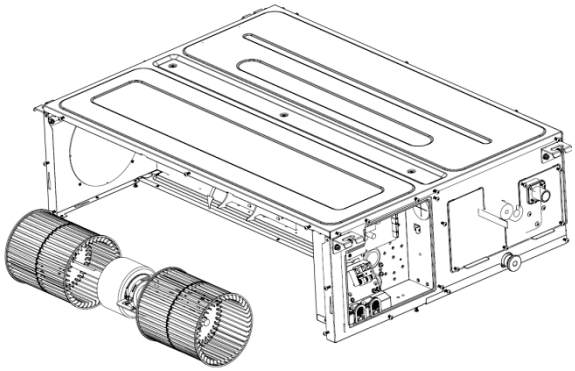	• Remove the motor from the motor support. • Use a hex wrench to loosen the screws of fan. • Remove the fan from the motor. • Replace with a new motor.
7. Re-install the device in a reverse order of the removal procedure.	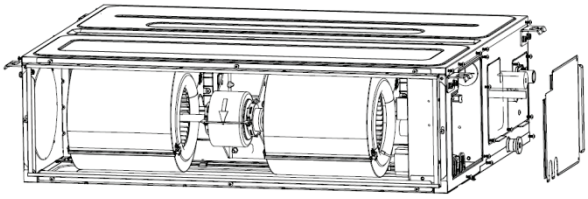	• Re-install the device in a reverse order of the removal procedure. Then connect power and test it.

Take model ASD-48BI2 as an example.

Removal of air return filter		
Note: Before removal, make sure power is cut off. During the removal procedure, take good care of all the components. Do not place the filter near any heat source.		
Step	Picture	Work instruction
Remove air return filter.	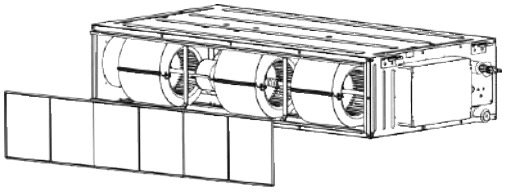	• Press the air return filters on the guide way sponge. There are 2 or 3 air return filters.

Removal of the cover of electric box and the electric box		
Note: Before removal, make sure power is cut off. During the removal procedure, take good care of all the components, especially the electric components. Do not hit or beat.		
Step	Picture	Work instruction
1. Remove the cover of electric box.	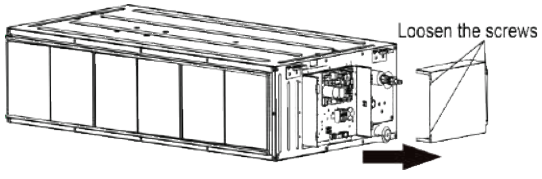	• Loosen the screws as shown by the circle and the box. Remove the box in the direction shown by the arrow.

Removal of the cover of electric box and the electric box		
Note: Before removal, make sure power is cut off. During the removal procedure, take good care of all the components, especially the electric components. Do not hit or beat.		
Step	Picture	Work instruction
2. Remove the electric box.	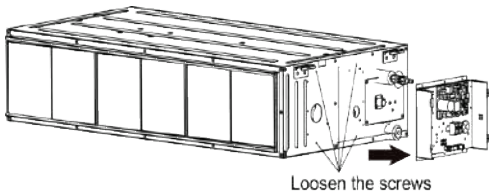	● Loosen the securing screws and remove the electric box.

Removal of water tray		
Note: Before removal, make sure power is cut off. During the removal procedure, take good care of all the components.		
Step	Picture	Work instruction
1. Remove the cover plate.	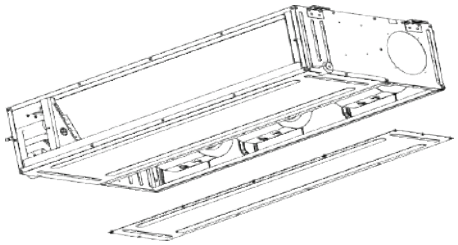	● Loosen the screws of cover plate and then remove the cover plate. (As shown in the picture, the circle indicates 6 screws of the cover plate.)
	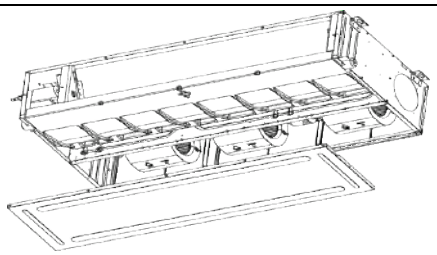	
2. Remove the water tray.	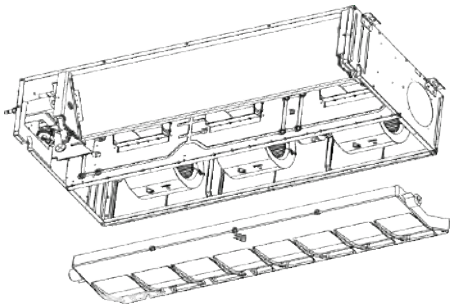	● Loosen the screws of water trap. Pull it up and remove it. The removed water tray is as shown in the picture.

Removal of evaporator		
Note: Make sure power is cut off. Take good care of the copper pipe and aluminum fins. If the removal takes a long time, please put the copper pipe under pressure.		
Step	Picture	Work instruction
1. Remove the screws on the side plate of evaporator.	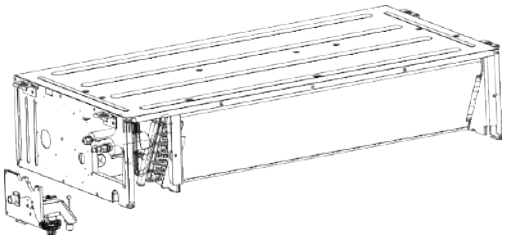	● Remove the screws of evaporator and the screws that connect the upper cover plate to the left and right side plates.

Removal of evaporator		
Note: Make sure power is cut off. Take good care of the copper pipe and aluminum fins. If the removal takes a long time, please put the copper pipe under pressure.		
Step	Picture	Work instruction
2. Remove the sealing plate the connects to the evaporator valve and the screws that connect to the flange.	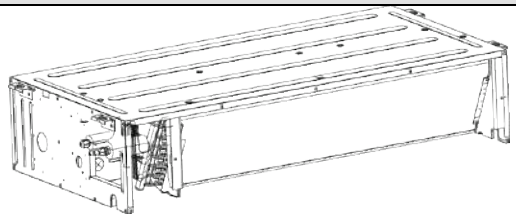	● Remove the screws of the sealing plate of valve. Then remove the sealing plate of valve. Remove the screws that connect the evaporator to the flange.
3. Remove the evaporator.	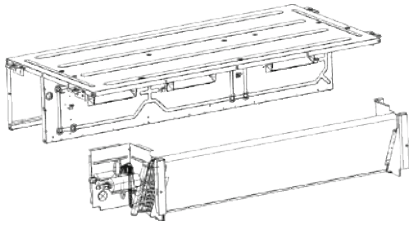	● Take off the evaporator. The removed evaporator is as shown in the picture.

4.5.2.3 Floor Ceiling Unit

Take model ASF-60BI2 as an example.

Removal of front grill		
Note: Before removal, make sure power is cut off. During the removal procedure, take good care of all the components. Do not place the filter near any heat source.		
Step	Picture	Work instruction
Remove the sub-assembly of front grill.	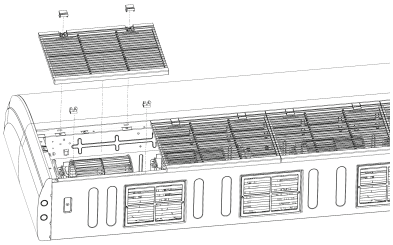	● Twist off the 2 hooks of the grill and the screws of the hooks. ● Open the grill and remove 2 lower clamps. Then remove the grill.

Remove the right and left decorative boards		
Note: Before removal, make sure power is cut off. During the removal procedure, take good care of all the components. Do not scratch the appearance components.		
Step	Picture	Work instruction
Remove the left and right panels.	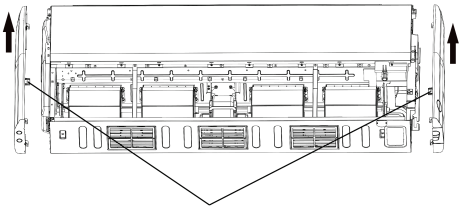	● Use a screwdriver to loosen the screws, as shown in the picture. Then pull the right and left panels upward. (Lines in the picture indicate the positions of screws.)

Removal of electric box assembly		
Note: Before removal, make sure power is cut off. During the removal procedure, take good care of all the components, especially the components in electric box. Protect it from water and collision.		
Step	Picture	Work instruction
Remove the electric box.	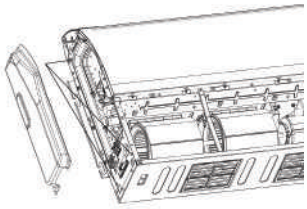	● Unscrew 34 screws as shown in the left picture and then remove the electric box.

Removal of air guide louver		
Note: Before removal, make sure power is cut off. During the removal procedure, take good care of all the components, especially the connectors of air guide louver.		
Step	Picture	Work instruction
Remove the air guide louver assembly.	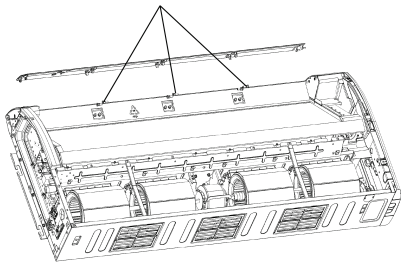	● Remove the air guide louver from its supporting assembly. Then take off the connectors from the swing motor. (As shown in the picture, the lines indicate the supporting assembly.)

Removal of water tray		
Note: Before removal, make sure power is cut off. During the removal procedure, take good care of all the components.		
Step	Picture	Work instruction
Remove the water tray.	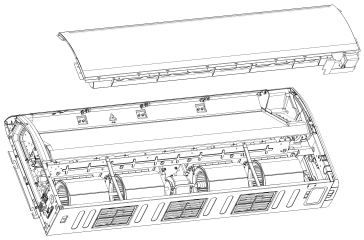	● Remove the water tray.

Removal of evaporator		
Note: Make sure power is cut off. Take good care of the copper pipe and aluminum fins. If the removal takes a long time, seal the copper pipe.		
Step	Picture	Work instruction
Remove the evaporator assembly.	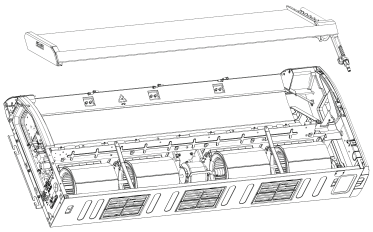	● Twist off the 6 screws of the evaporator, 3 screws of the plate board of water releasing flume, and 2 screws of the water tray. Then remove the evaporator.

Removal of display panel and fan assembly		
Note: Before removal, make sure power is cut off. During the removal procedure, take good care of all the components.		
Step	Picture	Work instruction
Remove the display panel and fan assembly.	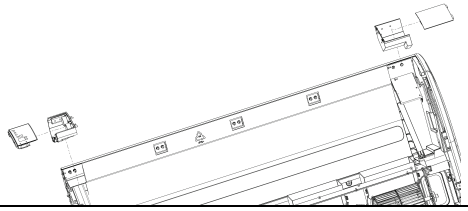	● First remove the display panel, next the bracket and then the swing motor mounting plate.

Removal of fan and motor		
Note: Before removal, make sure power is cut off. During the removal procedure, take good care of all the components, especially the screws of fan.		
Step	Picture	Work instruction
1. Remove the volutes.	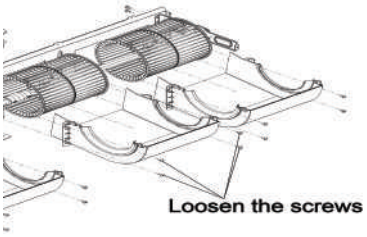	● Press the retaining ring at the joint of front and rear volutes. Then pull up the front volute. Then loosen the screws of the rear volute. Lift up the retaining ring of the rear volute and take it off. (As shown in the picture, the lines indicate the screws on both sides of the volutes.
2. Remove the fan.	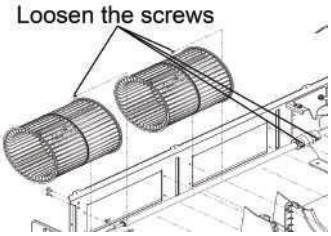	● Loosen the 2 screws of the coupler. Take out the shaft and axial flow fan. Loosen the screws of axial flow fan and remove the axial flow fan.

Removal of fan and motor		
Note: Before removal, make sure power is cut off. During the removal procedure, take good care of all the components, especially the screws of fan.		
Step	Picture	Work instruction
3. Remove the bearing fixed plate.	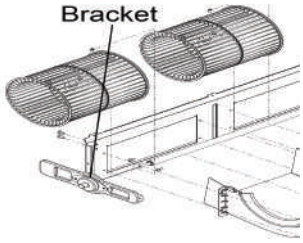	● Twist off the screws and nuts of bracket. Then remove the bracket.
4. Remove the motor	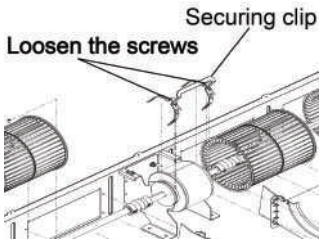	● Loosen the 2 screws of the motor securing clip. Remove the motor securing clip and its assembly.

Appendices

1. Resistance/Temperature Lists of Temperature Sensors

1.1 Voltage List of 15 KΩ Temperature Sensors (including ODU and IDO temperature sensors)

Temperature (℃)	Resistance (kΩ)	Voltage (V)	Temperature (℃)	Resistance (kΩ)	Voltage (V)
-20	144	0.311	71	2.523	2.825
-19	138.1	0.323	72	2.439	2.838
-18	128.6	0.345	73	2.358	2.852
-17	121.6	0.362	74	2.28	2.865
-16	115	0.381	75	2.205	2.877
-15	108.7	0.4	76	2.133	2.889
-14	102.9	0.42	77	2.064	2.901
-13	97.4	0.44	78	1.997	2.912
-12	92.22	0.462	79	1.933	2.923
-11	87.35	0.484	80	1.871	2.934
-10	82.75	0.506	81	1.811	2.945
-9	78.43	0.53	82	1.754	2.955
-8	74.35	0.554	83	1.699	2.964
-7	70.5	0.579	84	1.645	2.974
-6	66.88	0.605	85	1.594	2.983
-5	63.46	0.631	86	1.544	2.992
-4	60.23	0.658	87	1.497	3.001
-3	57.18	0.686	88	1.451	3.009
-2	54.31	0.714	89	1.408	3.017
-1	51.59	0.743	90	1.363	3.025
0	49.02	0.773	91	1.322	3.033
1	46.8	0.801	92	1.282	3.04
2	44.31	0.835	93	1.244	3.047
3	42.14	0.866	94	1.207	3.054
4	40.09	0.899	95	1.171	3.061
5	38.15	0.931	96	1.136	3.068
6	36.32	0.965	97	1.103	3.074
7	34.58	0.998	98	1.071	3.08
8	32.94	1.033	99	1.039	3.086
9	31.38	1.067	100	1.009	3.092
10	29.9	1.102	101	0.98	3.098
11	28.51	1.138	102	0.952	3.103

Temperature (℃)	Resistance (kΩ)	Voltage (V)	Temperature (℃)	Resistance (kΩ)	Voltage (V)
12	27.18	1.174	103	0.925	3.108
13	25.92	1.21	104	0.898	3.114
14	24.73	1.246	105	0.873	3.119
15	23.6	1.282	106	0.848	3.123
16	22.53	1.319	107	0.825	3.128
17	21.51	1.356	108	0.802	3.133
18	20.54	1.393	109	0.779	3.137
19	19.63	1.429	110	0.758	3.141
20	18.75	1.467	111	0.737	3.145
21	17.93	1.503	112	0.717	3.15
22	17.14	1.54	113	0.697	3.153
23	16.39	1.577	114	0.678	3.157
24	15.68	1.613	115	0.66	3.161
25	15	1.65	116	0.642	3.165
26	14.36	1.686	117	0.625	3.168
27	13.74	1.722	118	0.608	3.171
28	13.16	1.758	119	0.592	3.175
29	12.6	1.793	120	0.577	3.178
30	12.07	1.829	121	0.561	3.181
31	11.57	1.863	122	0.547	3.184
32	11.09	1.897	123	0.532	3.187
33	10.63	1.931	124	0.519	3.19
34	10.2	1.964	125	0.505	3.192
35	9.779	1.998	126	0.492	3.195
36	9.382	2.03	127	0.48	3.198
37	9.003	2.062	128	0.467	3.2
38	8.642	2.094	129	0.456	3.203
39	5.997	2.125	130	0.444	3.205
41	7.653	2.185	131	0.433	3.207
42	7.352	2.215	132	0.422	3.21
43	7.065	2.243	133	0.412	3.212
44	6.791	2.272	134	0.401	3.214
45	6.529	2.299	135	0.391	3.216
46	6.278	2.326	136	0.382	3.218
47	6.038	2.353	137	0.372	3.22
48	5.809	2.379	138	0.363	3.222
49	5.589	2.404	139	0.355	3.224
50	5.379	2.429	140	0.346	3.226
51	5.179	2.453	141	0.338	3.227
52	4.986	2.477	142	0.33	3.229
53	4.802	2.5	143	0.322	3.231
54	4.625	2.522	144	0.314	3.232
55	4.456	2.544	145	0.307	3.234
56	4.294	2.566	146	0.299	3.235

Temperature (℃)	Resistance (kΩ)	Voltage (V)	Temperature (℃)	Resistance (kΩ)	Voltage (V)
57	4.139	2.586	147	0.292	3.237
58	3.99	2.607	148	0.286	3.238
59	3.848	2.626	149	0.279	3.24
60	3.711	2.646	150	0.273	3.241
61	3.579	2.664	151	0.266	3.242
62	3.454	2.682	152	0.261	3.244
63	3.333	2.7	153	0.254	3.245
64	3.217	2.717	154	0.248	3.246
65	3.105	2.734	155	0.243	3.247
66	2.998	2.75	156	0.237	3.249
67	2.898	2.766	157	0.232	3.25
68	2.797	2.781	158	0.227	3.251
69	2.702	2.796	159	0.222	3.252
70	2.611	2.811	160	0.217	3.253

1.2 Voltage List of 20 KΩ Pipeline Temperature Sensors (including temperature sensors for defroster, IDU and ODU pipes)

Temperature (℃)	Resistance (kΩ)	Voltage (V)	Temperature (℃)	Resistance (kΩ)	Voltage (V)
-30	361.8	0.173	66	3.998	2.75
-29	339.8	0.183	67	3.861	2.766
-28	319.2	0.195	68	3.729	2.781
-27	300	0.206	69	3.603	2.796
-26	282.2	0.218	70	3.481	2.811
-25	265.5	0.231	71	3.364	2.825
-24	249.9	0.245	72	3.252	2.838
-23	235.3	0.259	73	3.144	2.852
-22	221.6	0.273	74	3.04	2.865
-21	208.9	0.288	75	2.94	2.877
-20	196.9	0.304	76	2.844	2.889
-19	181.4	0.328	77	2.752	2.901
-18	171.4	0.345	78	2.663	2.912
-17	162.1	0.362	79	2.577	2.923
-16	153.3	0.381	80	2.495	2.934
-15	145	0.4	81	2.415	2.944
-14	137.2	0.42	82	2.339	2.954
-13	129.9	0.44	83	2.265	2.964
-12	123	0.462	84	2.194	2.974
-11	116.5	0.484	85	2.125	2.983
-10	110.3	0.507	86	2.059	2.992
-9	104.6	0.53	87	1.996	3.001

Temperature (℃)	Resistance (kΩ)	Voltage (V)	Temperature (℃)	Resistance (kΩ)	Voltage (V)
-8	99.13	0.554	88	1.934	3.009
-7	94	0.579	89	1.875	3.017
-6	89.17	0.605	90	1.818	3.025
-5	84.61	0.631	91	1.763	3.033
-4	80.31	0.658	92	1.71	3.04
-3	76.24	0.686	93	1.658	3.047
-2	72.41	0.714	94	1.609	3.054
-1	68.79	0.743	95	1.561	3.061
0	65.37	0.773	96	1.515	3.068
1	62.13	0.804	97	1.47	3.074
2	59.08	0.835	98	1.427	3.08
3	56.19	0.866	99	1.386	3.086
4	53.46	0.898	100	1.346	3.092
5	50.87	0.931	101	1.307	3.098
6	48.42	0.965	102	1.269	3.103
7	46.11	0.998	103	1.233	3.108
8	43.92	1.033	104	1.198	3.114
9	41.84	1.067	105	1.164	3.119
10	39.87	1.102	106	1.131	3.123
11	38.01	1.138	107	1.099	3.128
12	36.24	1.174	108	1.069	3.133
13	34.57	1.209	109	1.039	3.137
14	32.98	1.246	110	1.01	3.141
15	31.47	1.282	111	0.9825	3.145
16	30.04	1.319	112	0.9556	3.15
17	28.68	1.356	113	0.9295	3.153
18	27.39	1.393	114	0.9043	3.157
19	26.17	1.429	115	0.8799	3.161
20	25.01	1.466	116	0.8562	3.165
21	23.9	1.503	117	0.8333	3.168
22	22.85	1.54	118	0.8111	3.171
23	21.85	1.577	119	0.7895	3.175
24	20.9	1.614	120	0.7687	3.178
25	20	1.65	121	0.7485	3.181
26	19.14	1.686	122	0.7289	3.184
27	18.32	1.722	123	0.7099	3.187
28	17.55	1.758	124	0.6915	3.19
29	16.8	1.793	125	0.6736	3.192
30	16.1	1.828	126	0.6563	3.195
31	15.43	1.863	127	0.6395	3.198
32	14.79	1.897	128	0.6232	3.2
33	14.18	1.931	129	0.6074	3.203
34	13.59	1.965	130	0.5921	3.205
35	13.04	1.998	131	0.5772	3.207

Temperature (℃)	Resistance (kΩ)	Voltage (V)	Temperature (℃)	Resistance (kΩ)	Voltage (V)
36	12.51	2.03	132	0.5627	3.21
37	12	2.063	133	0.5487	3.212
38	11.52	2.094	134	0.5351	3.214
39	11.06	2.125	135	0.5219	3.216
40	10.62	2.155	136	0.509	3.218
41	10.2	2.185	137	0.4966	3.22
42	9.803	2.215	138	0.4845	3.222
43	9.42	2.243	139	0.4727	3.224
44	9.054	2.272	140	0.4613	3.226
45	8.705	2.299	141	0.4502	3.227
46	8.37	2.326	142	0.4394	3.229
47	8.051	2.353	143	0.4289	3.231
48	7.745	2.379	144	0.4187	3.232
49	7.453	2.404	145	0.4088	3.234
50	7.173	2.429	146	0.3992	3.235
51	6.905	2.453	147	0.3899	3.237
52	6.648	2.477	148	0.3808	3.238
53	6.403	2.5	149	0.3719	3.24
54	6.167	2.522	150	0.3633	3.241
55	5.942	2.544	151	0.3549	3.242
56	5.726	2.565	152	0.3468	3.244
57	5.519	2.586	153	0.3389	3.245
58	5.32	2.607	154	0.3312	3.246
59	5.13	2.626	155	0.3237	3.247
60	4.948	2.646	156	0.3164	3.249
61	4.773	2.664	157	0.3093	3.25
62	4.605	2.682	158	0.3024	3.251
63	4.443	2.7	159	0.2956	3.252
64	4.289	2.717	160	0.2891	3.253
65	4.14	2.734			

1.3 Voltage List of 50 KΩ Discharge Temperature Sensors (including discharge air temperature sensor)

Temperature (℃)	Resistance (kΩ)	Voltage (V)	Temperature (℃)	Resistance (kΩ)	Voltage (V)
-30	911.56	0.036	61	11.736	1.518
-29	853.66	0.038	62	11.322	1.548
-28	799.98	0.041	63	10.925	1.577
-27	750.18	0.043	64	10.544	1.606
-26	703.92	0.046	65	10.178	1.635
-25	660.93	0.049	66	9.8269	1.664
-24	620.94	0.052	67	9.4896	1.693
-23	583.72	0.056	68	9.1655	1.722

Temperature (℃)	Resistance (kΩ)	Voltage (V)	Temperature (℃)	Resistance (kΩ)	Voltage (V)
-22	549.04	0.059	69	8.9542	1.741
-21	516.71	0.063	70	8.5551	1.778
-20	486.55	0.066	71	5.9676	1.806
-19	458.4	0.07	72	7.9913	1.834
-18	432.1	0.075	73	7.7257	1.862
-17	407.51	0.079	74	7.4702	1.889
-16	384.51	0.084	75	7.2245	1.916
-15	362.99	0.088	76	6.9882	1.943
-14	342.83	0.094	77	6.7608	1.969
-13	323.94	0.099	78	6.542	1.995
-12	306.23	0.104	79	6.3315	2.021
-11	289.61	0.11	80	6.1288	2.046
-10	274.02	0.116	81	5.9336	2.071
-9	259.37	0.123	82	5.7457	2.096
-8	245.61	0.129	83	5.5647	2.12
-7	232.67	0.136	84	5.3903	2.144
-6	220.5	0.143	85	5.2223	2.168
-5	209.05	0.151	86	5.0605	2.191
-4	195.97	0.158	87	4.9044	2.214
-3	188.12	0.167	88	4.7541	2.237
-2	178.65	0.175	89	4.6091	2.259
-1	169.68	0.184	90	4.4693	2.281
0	161.02	0.193	91	4.3345	2.302
1	153	0.202	92	4.2044	2.323
2	145.42	0.212	93	4.0789	2.344
3	135.96	0.223	94	3.9579	2.364
4	131.5	0.233	95	3.841	2.384
5	126.17	0.242	96	3.7283	2.404
6	119.08	0.256	97	3.6194	2.423
7	113.37	0.267	98	3.5143	2.442
8	107.96	0.28	99	3.4128	2.46
9	102.85	0.292	100	3.3147	2.478
10	98.006	0.306	101	3.22	2.496
11	93.42	0.319	102	3.1285	2.514
12	89.075	0.333	103	3.0401	2.531
13	84.956	0.348	104	2.9547	2.547
14	81.052	0.362	105	2.8721	2.564
15	77.349	0.378	106	2.7922	2.58
16	73.896	0.393	107	2.715	2.595
17	70.503	0.41	108	2.6404	2.611
18	67.338	0.427	109	2.5682	2.626
19	64.333	0.444	110	2.4983	2.64
20	61.478	0.462	111	2.4308	2.655
21	58.766	0.48	112	2.3654	2.669

Temperature (℃)	Resistance (kΩ)	Voltage (V)	Temperature (℃)	Resistance (kΩ)	Voltage (V)
22	56.189	0.499	113	2.3021	2.682
23	53.738	0.518	114	2.2409	2.696
24	51.408	0.537	115	2.1816	2.709
25	49.191	0.558	116	2.1242	2.722
26	47.082	0.578	117	2.0686	2.734
27	45.074	0.599	118	2.0148	2.747
28	43.163	0.621	119	1.9626	2.759
29	41.313	0.643	120	1.9123	2.77
30	39.61	0.665	121	1.8652	2.781
31	37.958	0.688	122	1.8158	2.793
32	36.384	0.711	123	1.7698	2.804
33	34.883	0.735	124	1.7253	2.814
34	33.453	0.759	125	1.6821	2.825
35	32.088	0.784	126	1.6402	2.835
36	30.787	0.809	127	1.5996	2.845
37	29.544	0.835	128	1.5602	2.855
38	28.359	0.86	129	1.522	2.864
39	27.227	0.886	130	1.485	2.873
40	26.147	0.913	131	1.449	2.882
41	25.114	0.94	132	1.4141	2.891
42	24.128	0.967	133	1.3803	2.9
43	23.186	0.994	134	1.3474	2.908
44	22.286	1.022	135	1.3155	2.916
45	21.425	1.05	136	1.2846	2.924
46	20.601	1.078	137	1.2545	2.932
47	19.814	1.107	138	1.2233	2.94
48	19.061	1.136	139	1.1969	2.947
49	18.34	1.164	140	1.1694	2.955
50	17.651	1.193	141	1.1476	2.96
51	16.99	1.223	142	1.1166	2.969
52	16.358	1.252	143	1.0913	2.975
53	15.753	1.281	144	1.0667	2.982
54	15.173	1.311	145	1.0429	2.988
55	14.618	1.34	146	1.0197	2.995
56	14.085	1.37	147	0.9971	3.001
57	13.575	1.4	148	0.9752	3.007
58	13.086	1.429	149	0.9538	3.013
59	12.617	1.459	150	0.9331	3.018
60	12.368	1.475			

2. Temperature/Pressure List of Refrigerant

R32							
Pressure	Temperature		Pressure	Temperature		Pressure	Temperature
Kpa	℃		Kpa	℃		Kpa	℃
100	-51.909		1250	14.153		2400	38.688
150	-43.635		1300	15.52		2450	39.529
200	-37.323		1350	16.847		2500	40.358
250	-32.15		1400	18.138		2550	41.173
300	-27.731		1450	19.395		2600	41.977
350	-23.85		1500	20.619		2650	42.769
400	-20.378		1550	21.813		2700	43.55
450	-17.225		1600	22.978		2750	44.32
500	-14.331		1650	24.116		2800	45.079
550	-11.65		1700	25.229		2850	45.828
600	-9.1503		1750	26.317		2900	46.567
650	-6.8046		1800	27.382		2950	47.296
700	-4.5925		1850	28.425		3000	48.015
750	-2.4975		1900	29.447		3050	48.726
800	-0.50613		1950	30.448		3100	49.428
850	1.393		2000	31.431		3150	50.121
900	3.2092		2050	32.395		3200	50.806
950	4.9506		2100	33.341		3250	51.482
1000	6.624		2150	34.271		3300	52.15
1050	8.2352		2200	35.184		3350	52.811
1100	9.7896		2250	36.082		3400	53.464
1150	11.291		2300	36.965		3450	54.11
1200	12.745		2350	37.834		3500	54.748

3. Refrigerant Notice/Concentration

This air conditioner uses R32 refrigerant. The construction area for installation, operation and storage of the air conditioner must be larger than the minimum construction area. The minimum area for installation is determined by:

1.Refrigerant charging quantity for the entire system (ex-factory charging quantity + additional charging quantity);

2.Checking out in the applicable tables:

(1) For indoor unit, confirm the model of indoor unit and check the corresponding table.

(2) For outdoor unit that is installed or placed indoors, select the corresponding table according to the height of the room.

Height of the room	Select the applicable table
<1.8m	Floor standing type
≥1.8m	Wall mounted type

3.Refer to the following table to check out the minimum construction area.

Ceiling type		Wall mounted type		Floor standing type	
Weight (kg)	Area (m^2)	Weight (kg)	Area (m^2)	Weight (kg)	Area (m^2)
<1.224	—	<1.224	—	<1.224	—
1.224	0.956	1.224	1.43	1.224	12.9
1.4	1.25	1.4	1.87	1.4	16.8
1.6	1.63	1.6	2.44	1.6	22.0
1.8	2.07	1.8	3.09	1.8	27.8
2.0	2.55	2.0	3.81	2.0	34.3
2.2	3.09	2.2	4.61	2.2	41.5
2.4	3.68	2.4	5.49	2.4	49.4
2.6	4.31	2.6	6.44	2.6	58.0
2.8	5.00	2.8	7.47	2.8	67.3
3.0	5.74	3.0	8.58	3.0	77.2
3.2	6.54	3.2	9.76	3.2	87.9
3.4	7.38	3.4	11.0	3.4	99.2
3.6	8.27	3.6	12.4	3.6	111
3.8	9.22	3.8	13.8	3.8	124
4.0	10.2	4.0	15.3	4.0	137
4.2	11.3	4.2	16.8	4.2	151
4.4	12.4	4.4	18.5	4.4	166
4.6	13.5	4.6	20.2	4.6	182
4.8	14.7	4.8	22.0	4.8	198
5.0	16.0	5.0	23.8	5.0	215
5.2	17.3	5.2	25.8	5.2	232
5.4	18.6	5.4	27.8	5.4	250
5.6	20.0	5.6	29.9	5.6	269
5.8	21.5	5.8	32.1	5.8	289
6.0	23.0	6.0	34.3	6.0	309
6.2	24.5	6.2	36.6	6.2	330
6.4	26.1	6.4	39.1	6.4	351
6.6	27.8	6.6	41.5	6.6	374
6.8	29.5	6.8	44.1	6.8	397
7.0	31.3	7.0	46.7	7.0	420
7.2	33.1	7.2	49.4	7.2	445
7.4	34.9	7.4	52.2	7.4	470
7.6	36.9	7.6	55.1	7.6	496
7.8	38.8	7.8	58.0	7.8	522
8.0	40.8	8.0	61.0	8.0	549

NOTE CONCERNING PROTECTION OF ENVIRONMENT



This product must not be disposed of via normal household waste after its service life, but must be taken to a collection station for the recycling of electrical and electronic devices. The symbol on the product, the operating instructions or the packaging indicate such disposal procedures. The materials are recyclable in accordance with their respective symbols. By means of re-use, material recycling or any other form of recycling old appliances you are making an important contribution to the protection of our environment. Please ask your local council where your nearest disposal station is located.

INFORMATION CONCERNING USED REFRIGERANT MEDIUM

This unit is containing fluorinated gases included in the Kyoto protocol.
The maintenance and the liquidation must be carried out by qualified personnel.

Type of refrigerant: R32
The quantity of the refrigerant: Please see the unit label.
The value GWP: 675 (1 kg R32 = 0,675 t CO_2 eq)
GWP = Global Warming Potential

 Appliance filled with flammable gas R32.

In case of quality problem or other please contact your local supplier or authorized service center.
Emergency number: 112

PRODUCER

SINCLAIR CORPORATION Ltd.
16 Great Queen Street
WC2B 5AH London
United Kingdom
www.sinclair-world.com

This product was manufactured in China (Made in China).

REPRESENTATIVE

SINCLAIR Global Group s.r.o.
Purkynova 45
612 00 Brno
Czech Republic

TECHNICAL SUPPORT

SINCLAIR Global Group s.r.o.
Purkynova 45
612 00 Brno
Czech Republic
Tel.: +420 800 100 285 | Fax: +420 541 590 124
www.sinclair-solutions.com | info@sinclair-solutions.com

CE

NOTES


sinclair
AIR CONDITIONING