Engineering Data Book

Ver. 01 | 13-10-2023

EN

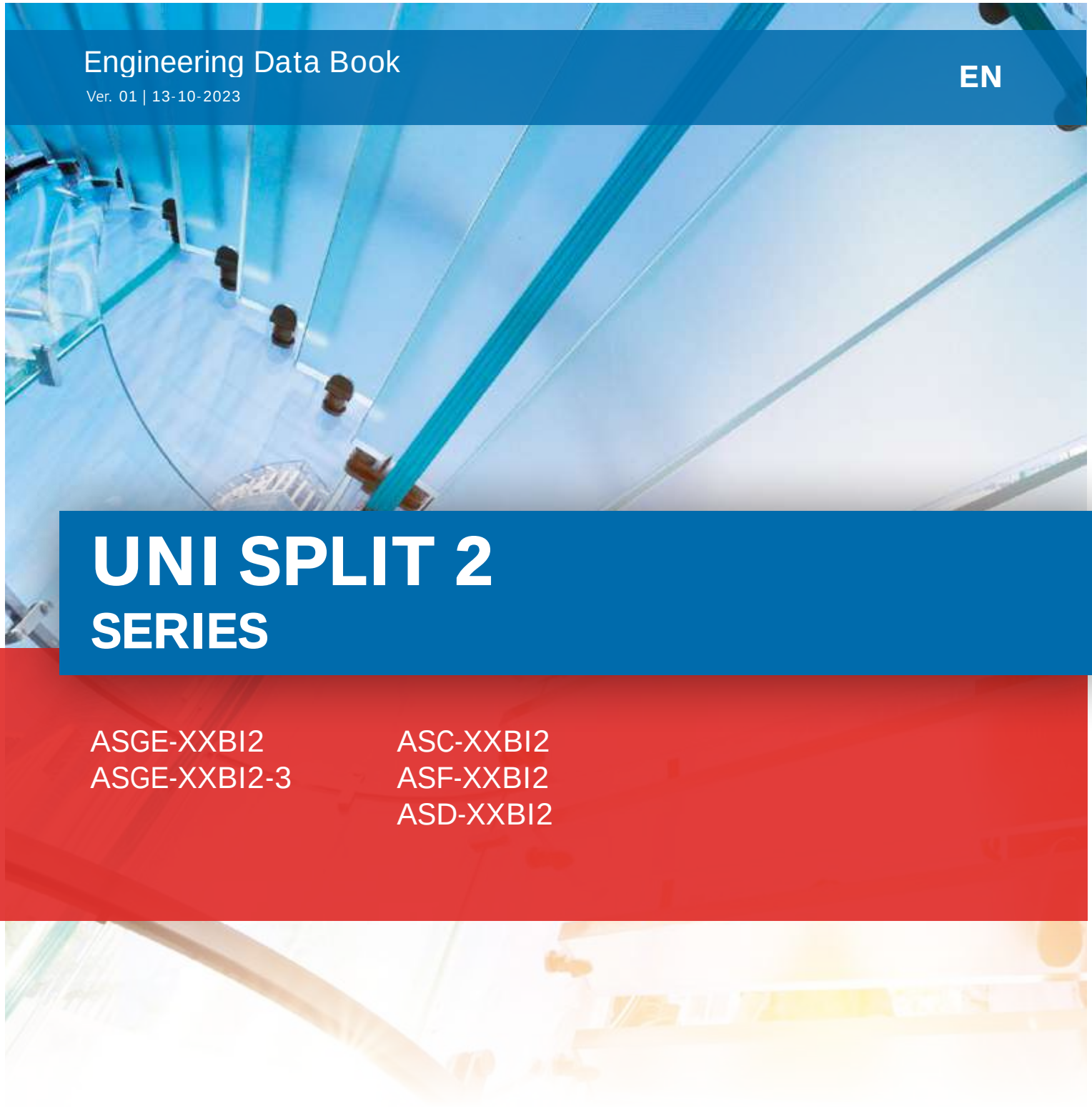

UNI SPLIT 2
SERIES

ASGE-XXBI2
ASGE-XXBI2-3

ASC-XXBI2
ASF-XXBI2
ASD-XXBI2

sinclair
AIR CONDITIONING

IMPORTANT NOTE:

Read this manual carefully before installing or operating your new air conditioning unit.
Make sure to save this manual for future reference.

CONTENTS

1 PRODUCT LIST 1
2 PRODUCT FEATURES 6
3 PRODUCT PARAMETERS 26
4 OPERATION RANGE 38
5 CAPACITY CORRECTION 39
6 AIR VOLUME STATIC PRESSURE CURVE 76
7 AIRFLOW CHART 81
8 NOISE 102
9 DIMENSIONS AND INSTALLATION SITE 106
10 ELECTRICAL INSTALLATION 117
11 LIST OF STANDARD AND OPTIONAL PARTS 123

1 PRODUCT LIST

1.1 Outdoor Unit Lineup

Model	Power Supply (V,Ph,Hz)	Appearance
ASGE-12BI2	220-240V ~50/60Hz	
ASGE-18BI2	220-240V ~50/60Hz	
ASGE-24BI2	220-240V ~50/60Hz	
ASGE-30BI2		
ASGE-36BI2	220-240V ~50/60Hz	
ASGE-42BI2		
ASGE-48BI2		

Model	Power Supply (V,Ph,Hz)	Appearance
ASGE-36BI2-3	380-415V 3N~50/60Hz	
ASGE-42BI2-3		
ASGE-48BI2-3		
ASGE-60BI2-3	380-415V 3N~50/60Hz	

Notes:

- If one outdoor unit is to be connected with multiple indoor units, the indoor units must have the same cooling capacity and be of the same type.

1.2 Indoor Unit Lineup

- Sinclair UNI split 2 adopts self-adaptation technology to be matched with different types of indoor units (duct type, cassette type, floor ceiling type, wall-mounted type) according to the room decoration design and user demands, saving the cost of warehouse management and after-sales maintenance.
- It is widely applicable for apartments, villas, hotels, office buildings and small and medium sized supermarkets.
- Cooling capacity range:3.5kW~16 kW; Applicable area:16~140m²

	Model	Rated Cooling/ Heating Capacity (kW)	Appearance	Features
Cassette Type	ASC-12BI2	3.50/4.00		●Compact cassette unit with dimensions of 570mm×570mm; can be perfectly fit into a standard 600mm×600mm ceiling space; ●With 8-way air discharge panels for 360° air supply; ●Thanks to the built-in electric box, maintenance can be carried out after opening the grill –no need to remove the ceiling; **General series:** ●With 8-way air discharge panels for 360°air supply; ●5 fan speeds can be set to meet different air flow requirements; ●Panels with smart sensors are optional; ●Plasmacluster ion sterilization module is included, for a healthy and comfortable environment;
	ASC-18BI2	5.00/5.60		
	ASC-24BI2	7.10/7.80		
	ASC-30BI2	8.50/8.80		
	ASC-36BI2	10.50/11.50		
	ASC-42BI2	12.10/13.50		
	ASC-48BI2	13.40/15.50		
	ASC-60BI2	14.50/17.00		

Duct Type

Model	Rated Cooling/ Heating Capacity (kW)	Appearance	Features
ASD-12BI2	3.50/4.00		●Ultra thin structure, only 200mm thick; ●Static pressure up to 80Pa, with 5 static pressure stages and 7 fan speeds; ●With drain pump as standard accessories. The delivery lift can reach 1000mm; ●Two air return modes to choose from: bottom air return and rear air return;
ASD-18BI2	5.30/5.60		
ASD-24BI2	7.10/8.00		**General series:** ●Up to 9 static pressure stages with a maximum of 200Pa can be set, to suit different static pressure requirements; ●Compact structure, only 260mm thick; models 7.1kW/8.5kW are only 900mm in length, suitable to places with narrow ceiling space; ●With drain pump as standard accessories. The delivery lift can reach 1000mm; ●Two air return modes to choose from: bottom air return and rear air return; ●Plasmacluster ion sterilization module is included, for a healthy and comfortable environment;
ASD-30BI2	8.50/8.80		
ASD-36BI2	10.50/11.50		
ASD-42BI2	12.10/13.50		
ASD-48BI2	13.40/15.50		
ASD-60BI2	16.00/17.00		

	Model	Rated Cooling/ Heating Capacity (kW)	Appearance	Features
Floor Ceiling Type	ASF-12BI2	3.50/4.00		**General series:** ●Two installation methods to choose from: floor or ceiling mounted; ●Dual air guide louvers for multi-layer air discharge and higher level of comfort; the bright white appearance makes it simple and beautiful; ●2 digit 7-segment display of temperature and error codes; ●Plasmacluster ion sterilization module is included, for a healthy and comfortable environment;
	ASF-18BI2	5.30/5.60		
	ASF-24BI2	7.10/7.70	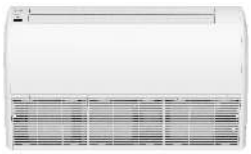	
	ASF-30BI2	8.50/8.80		
	ASF-36BI2	10.00/11.50		
	ASF-42BI2	12.10/13.50		
	ASF-48BI2	13.40/15.50		
	ASF-60BI2	16.00/17.00		

Notes:

- 1 Ton =12000Btu/h = 3.517kW
- The outdoor unit is compatible with three types of indoor units: cassette type, duct type and floor ceiling type.

2 PRODUCT FEATURES

2.1 Energy-Saving

UNI split 2 adopts R32 refrigerant .Thanks to the high-efficiency structural design, all DC inverter control, high-efficiency compressor and motor, optimized wind field design and enhanced heat exchange technology, they can achieve 10% energy savings on average compared to the last generation.

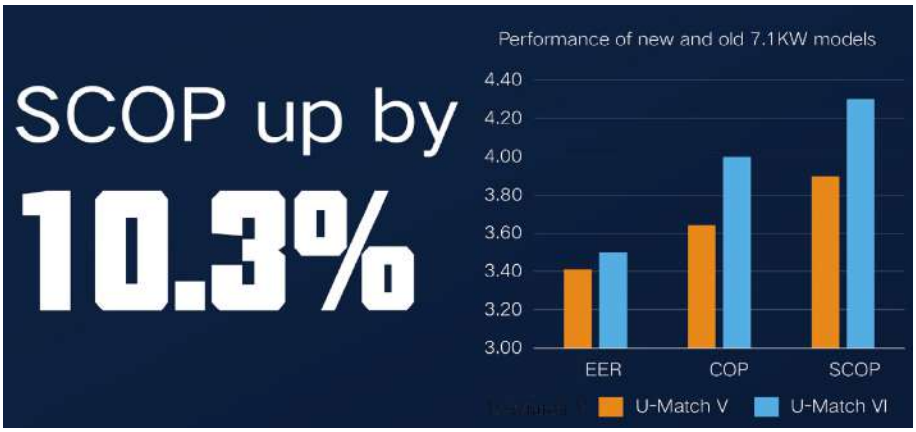

2.1.1 High Efficiency Compressor

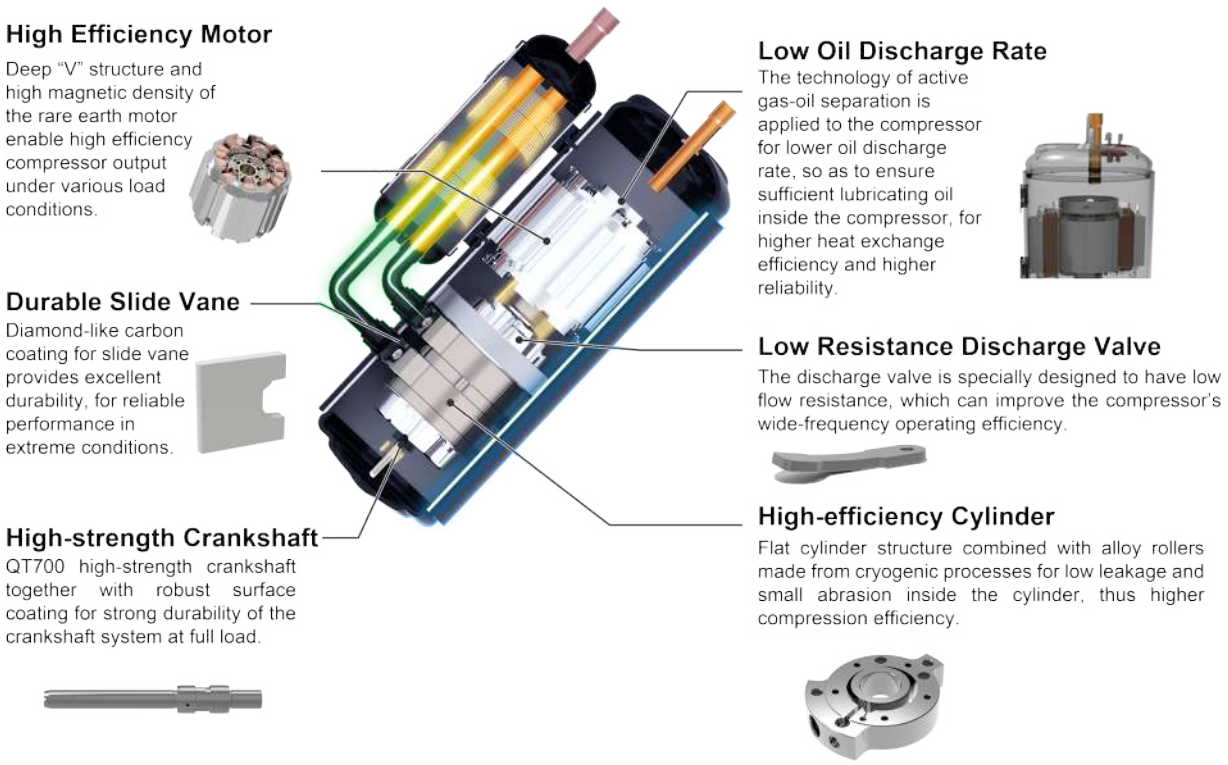

2.1.2 High-Efficiency DC Motor

- DC Brushless Motor (outdoor)

Thanks to the high-efficiency DC inverter design and high-power density structure, the external motor has less magnetic flux leakage and less loss. Motor efficiency is 32% higher than that of conventional AC motors.



- DC Brushless Motor (indoor)



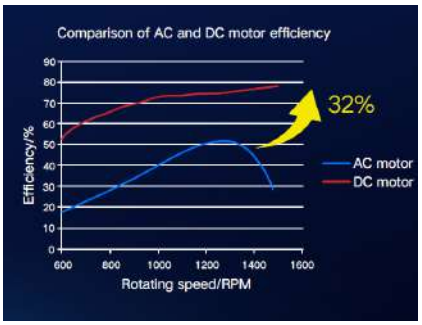

2.1.3 Enhanced Heat Exchange Design

- The newly designed internally threaded copper pipe can effectively improve heat exchange performance.

Smaller addendum angle helps to increase the internal heat transfer area;
Larger helix angle helps to improve turbulence intensity and enhance convective heat transfer;
More teeth, larger internal heat transfer area, higher heat exchange efficiency

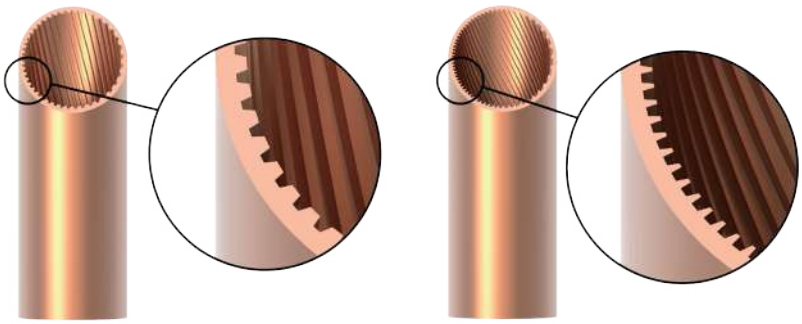

Old Series New Series

- The low resistance distribution type sub-cooling flow path, new type fins and optimized wind field design also contribute to the increase of heat exchange efficiency.

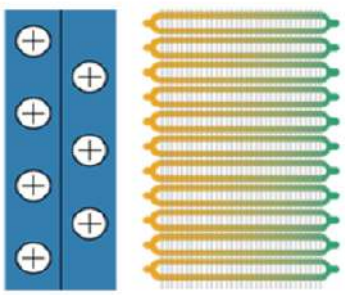

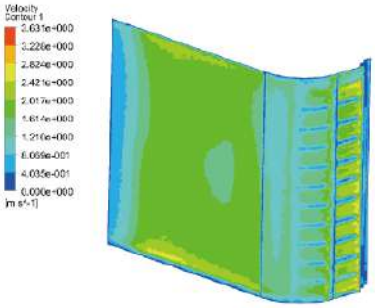

2.1.4 Wind Field Optimization

- **Low wind resistance grille:** 2% increase in air volume by optimizing the“raindrop” grille and rotating divergent low wind resistance structure.
- **Low wind resistance motor support:** the U-shaped motor support results in 55% decrease in windward area and 1.5% increase in air volume.
- **Efficient bionic fan blades:**bionic fan blades with long chord length and a big rooting-in angle are used to improve the aerodynamic performance of the fan, leading to 10% increase in air volume.

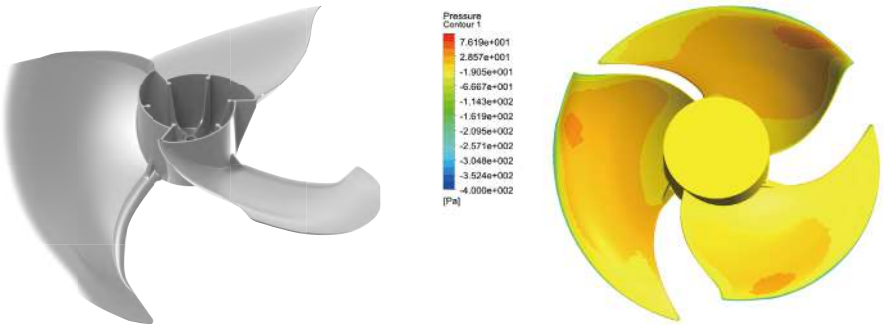

2.2 Health Protection

2.2.1 Fresh Air Control

Duct units and floor ceiling units of the entire series are equipped with fresh air inlets. They can introduce 8%~12% fresh outside air into the room to ensure indoor air quality.

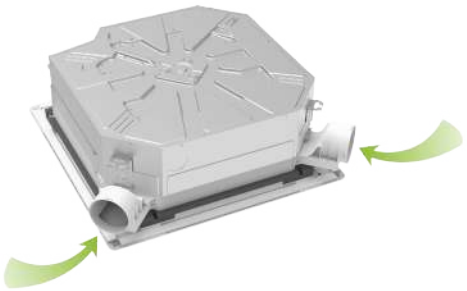

2.2.2 Various Options of Sterilization Filters

Different choices of anti-bacterial or purifying filters are offered to be installed (e.g. catechin, active carbon, etc…)

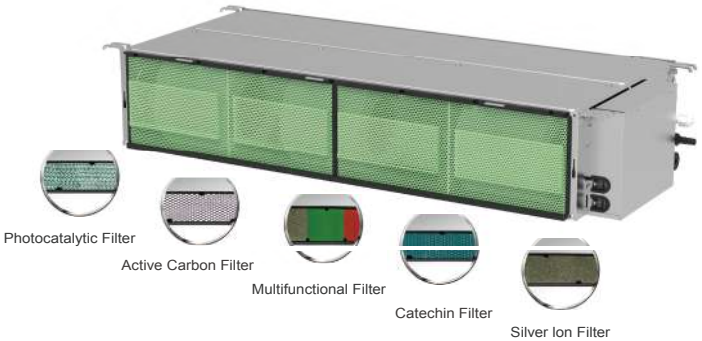

Note: applicable to duct units of "12", "18", "48", and "60" only.

2.2.3 Plasmacluster Ion Sterilization

Through high-voltage discharge of the plasmacluster ion module, the air is ionized and generates a large number of ions, which then combine with bacteria and viruses to make them inactivated.



2.2.4 56℃ Self-cleaning System

Sinclair high-temperature self-cleaning system with 5 stages of deep cleaning can effectively clean away dust and dirt on the evaporator and then automatically enter the stage of high-temperature sterilization, to make the conditioned air cleaner and healthier.

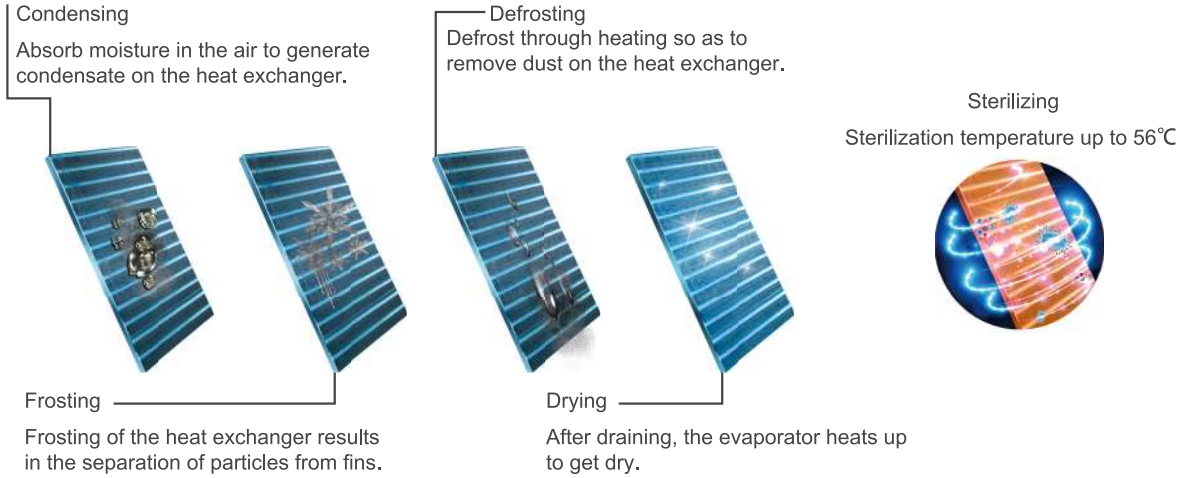

2.2.5 Plasma Sterilization Module

- Primary filter: filter out hair, pollen, fluff, flying insects and large particles.
- Generator: generate plasma to kill bacteria and viruses with charged particles.
- Collector: collect dust, dead bacteria and other harmful substances.



Notes：

1. A variety of sterilization filters and plasma sterilization module are optional for duct type units.
2. Plasmacluster ion sterilization function is as standard.
3. Applicable only to duct units of "12" and "18".

2.3 Enhanced Comfort

2.3.1 Stable Temperature Control

UNI split 2 provide stable temperature control and more comfortable user experience by adopting DC inverter compressors with variable capacity output, DC motors with stepless speed regulation, electronic expansion valves with accurate flow control ranging from 0 to 480P ,and ambient temperature sensing technology with a precision of ±0.5℃ .

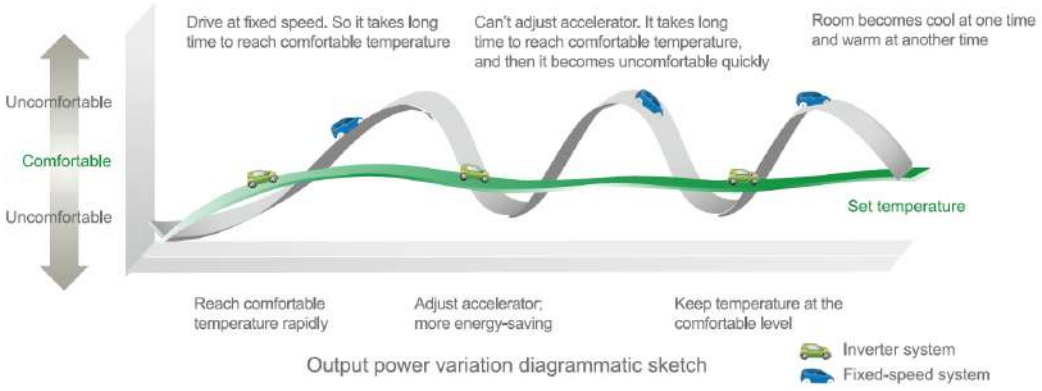

2.3.2 Fast Cooling / Heating

By detecting the set temperature, indoor and outdoor ambient temperatures, it will automatically enable fast cooling or heating, which is 20% faster than standard cooling or heating.



2.3.3 I Demand Function

This function enables the air conditioner to operate at less than 75% rated power. For some places, the government may have restrictions in power use during peak hours. This can save energy while relieving power consumption stress caused by full load operation.

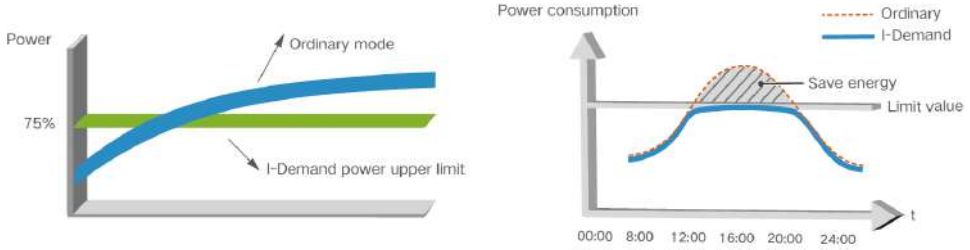

2.3.4 Quiet Design

2.3.4.1 Low Noise Fan Blade Design

Noise is down by 3dB(A) through the optimization of the fan blade profile.

Based on a full analysis of the low resistance and silent characteristics of birds flying at high speed, the fan blades are designed with the shape of eagle wings to improve the air flow on the surface of the blade rotating at high speed, and to suppress the trailing edge noise intensity of the blade for lower noise;

The tail of the blade imitates the serrated shape of eagle wings, with excellent aerodynamic performance and low noise after repeated optimization through software simulation.

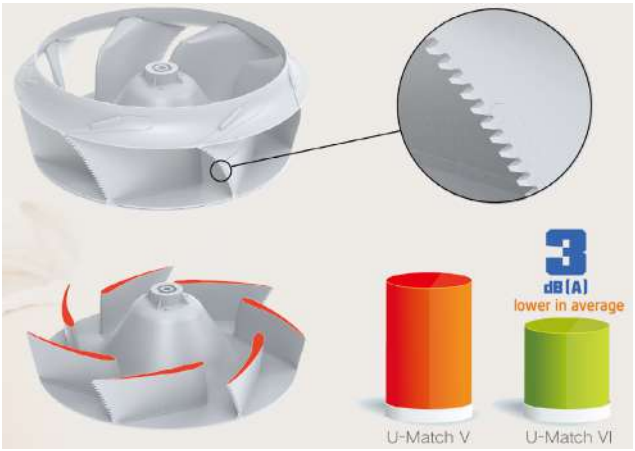

2.3.4.2 Compressor Quiet Design

① New Flange Support Structure

New support structure for flange component, with high stiffness, low vibration and improved sound quality.



② Dual-layer Sound Absorption Design

Wide-spectrum sound absorption structure, leading to significant reduction in exhaust noise.



③ Newly Designed Support

High-strength support is used to avoid sympathetic vibration, enabling lower operating sound.



④ L-shaped Feet

L-shaped compressor feet are adopted to lower the center of gravity and reduce vibration



⑤ Reservoir

Thicker casing is designed to improve the compressor's stiffness and reduce noise radiation

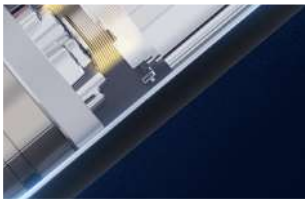



2.4 Reliability

2.4.1 Wide Operation Range

The cooling system equipped with all DC inverter technology adopts stepless speed regulation for its compressor and fan motor and accurate flow control for the electronic expansion valve, which ensure reliable operation in a wide operation range, making the units well-suited to a wider range of applications.

Ambient temperature range for cooling: -20℃ ~52℃

Ambient temperature range for heating: -20℃ ~24℃



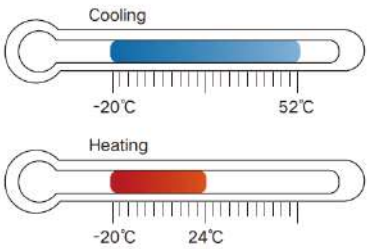

2.4.2 Wide Voltage Range

Through the optimization of drive and electronic control parameters, UNI split 2 can operate in a wide voltage range and run normally even if the voltage is down to 180V. They can be used in islands or places with unstable power supply.

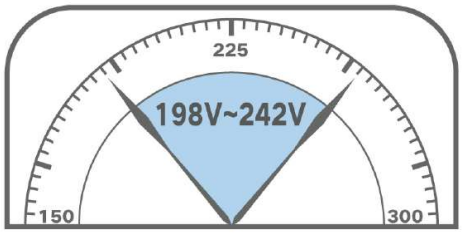

Others

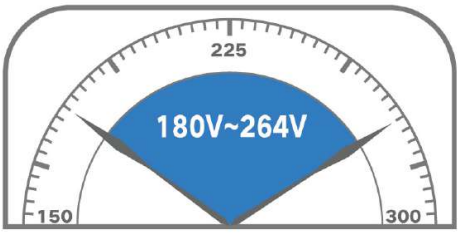

SINCLAIR

2.4.3 PCB 3-layer Anticorrosion Coating

PCB boards of outdoor units all have three layers of anticorrosion coating, which can prevent moisture, insects and dust.

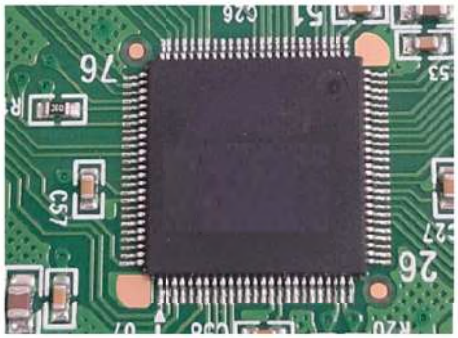

Before coating

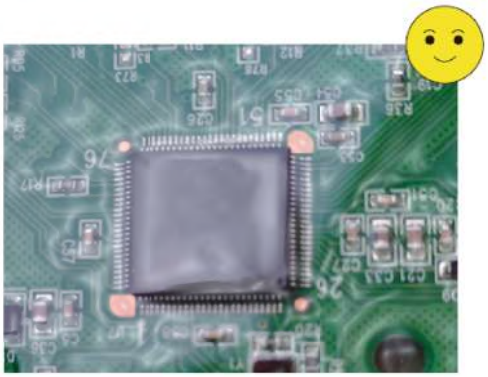

After coating with three anticorrosion layers

2.4.4 Wired Controller Moisture-proof

The wired controller adopts double moisture-proof sealing designs, which can effectively protect the PCB from dampness

Responsive and water-proof touch buttons, with long service life.

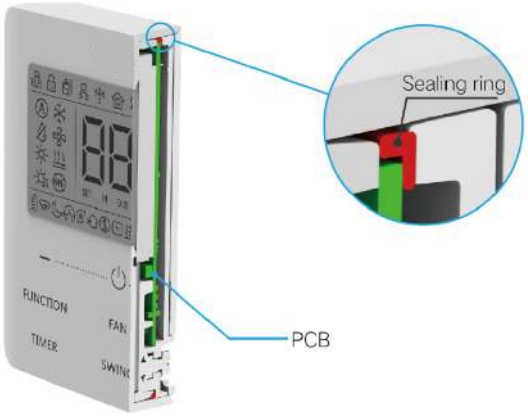

2.4.6 Multiple Safety Protection Measures

Our units are CE certified



2.5 Intelligent Control

2.5.1 Multiple Control Functions

A variety of control modules to be selected, providing multiple intelligent control functions for users.

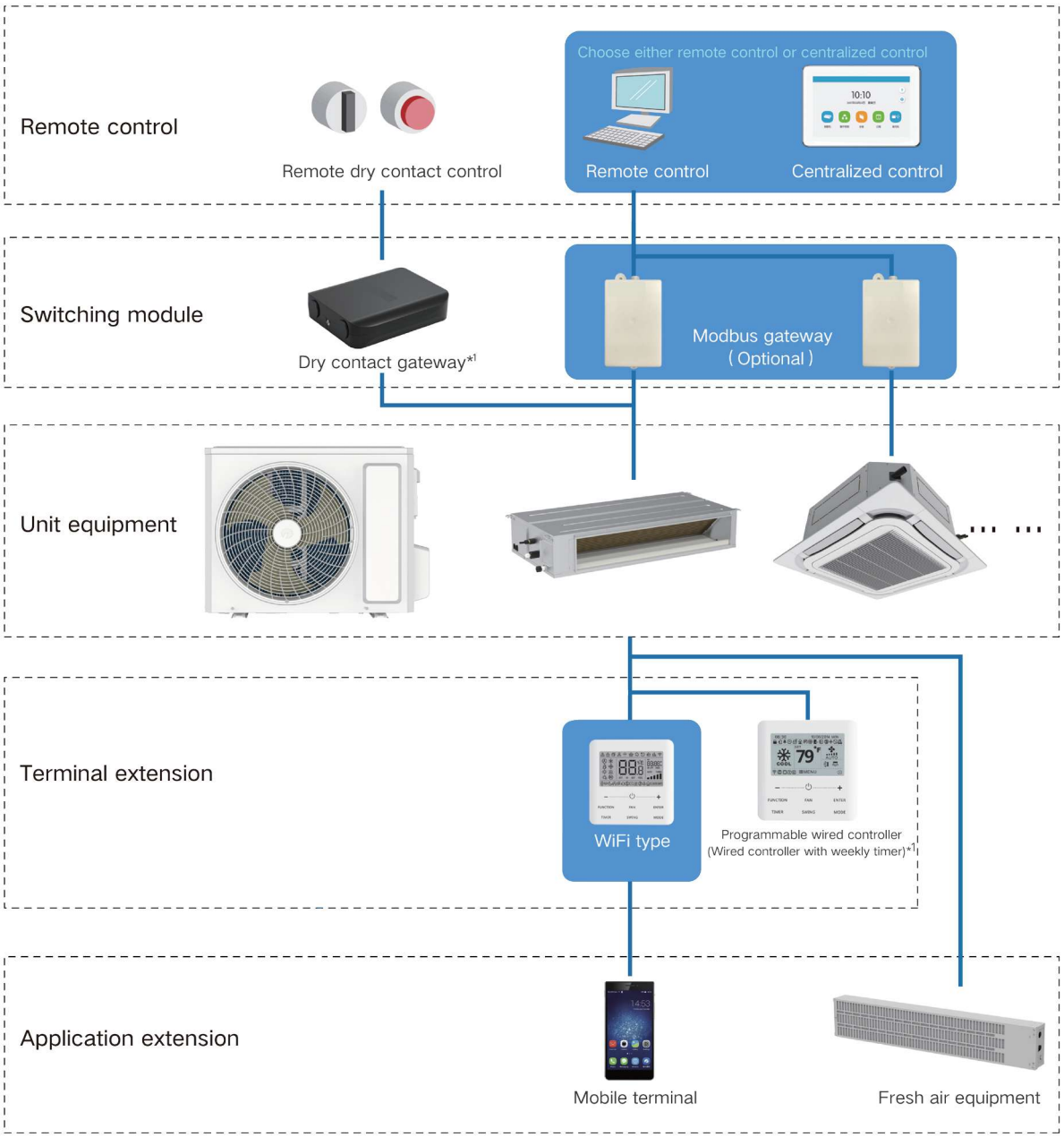

Notes:

*1. It is under development. This picture is for reference only.

*2. Please consult our salespersons before placing an order.

2.5.2 WiFi Intelligent Control (under development)

Air conditioners in the whole house can be centrally controlled by the mobile app, which is more convenient to use.



2.5.3 Centralized Control

Our centralized controller (model SCC-36) can control up to 36 indoor units.

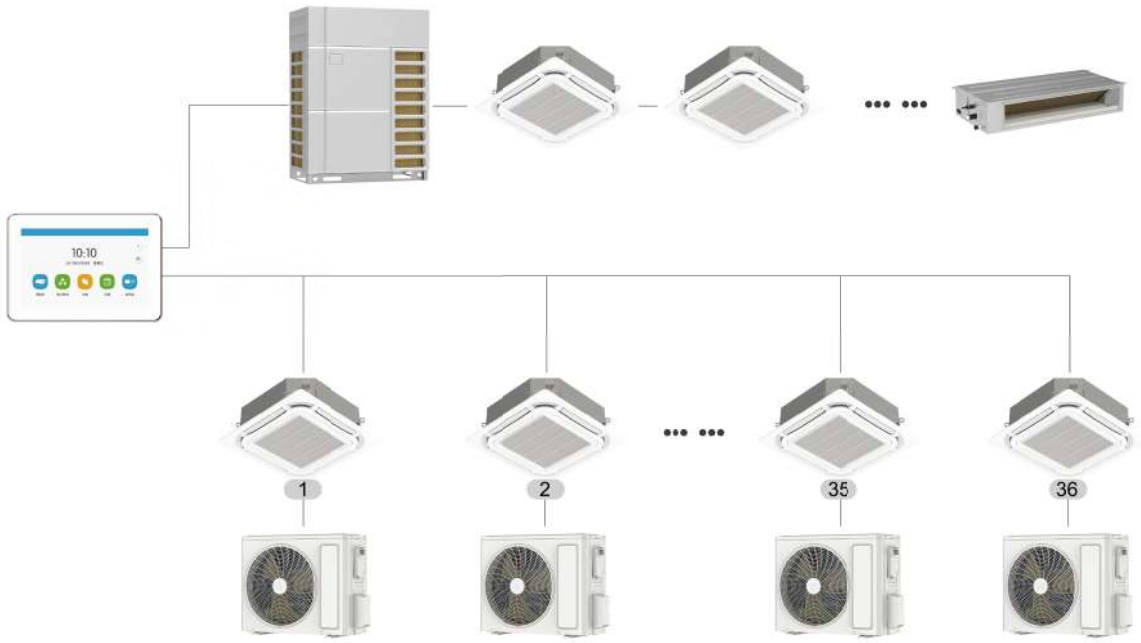

Note: This topology is only for general series. For series with special functions, the Modbus gateway is not needed.

2.5.4 Diversified Control Forms

	Control form	Wired remote controller	Wireless remote controller
Controlled by a single controller	Basic system	Stepless and 2-core (max. length of the wiring is 30m). 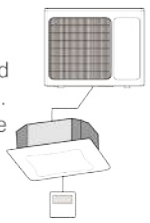	The receiver is installed in the indoor unit. 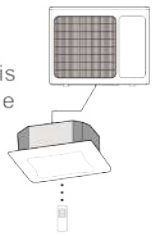
Controlled by dual controllers	Dual wired controllers or one wired controller and one remote controller	Connect to 2 wired controllers 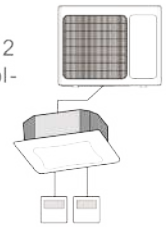	Controlled by one remote controller and one wired controller. 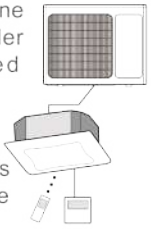 The receiver is installed in the indoor unit
Dry contact control	Input signal to control the unit in virtue of the dry contact in dry contact gateway.	Linkage control 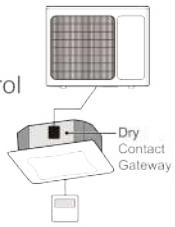	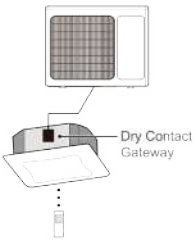
Central far-end control	The farthest communication distance is 800m; 255 sets of units can be controlled at most; The controllable unit quantity of our central controller is 36 sets.	Central controller (optional components) 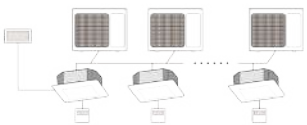	Central controller (optional components) 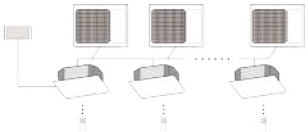

2.5.7 No KIT Needed for Multi-split Application

Multi-split kit is no longer needed for UNI split 2. Current standard wired controllers can satisfy the needs for controlling multiple indoor units with one single controller, providing more convenience for installa-tion.

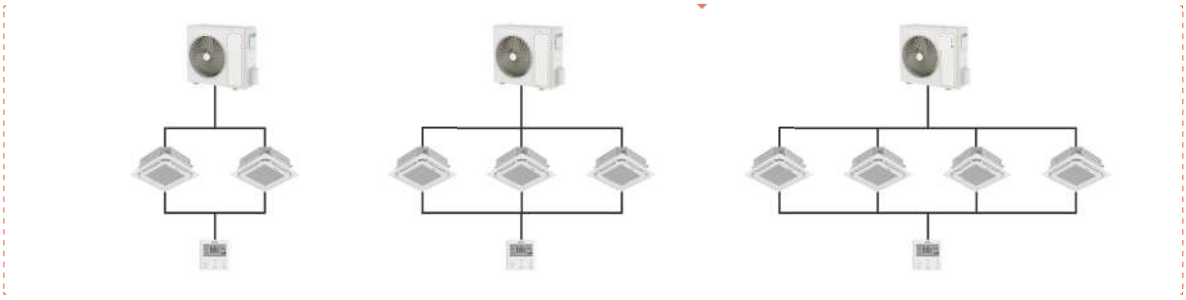

2.5.9 Dry Contact Gateway

Sinclair dry contact gateway (optional) provides signal output contacts for fire alarm, remote ON/OFF switch, operating status, running mode, error indicating, etc.

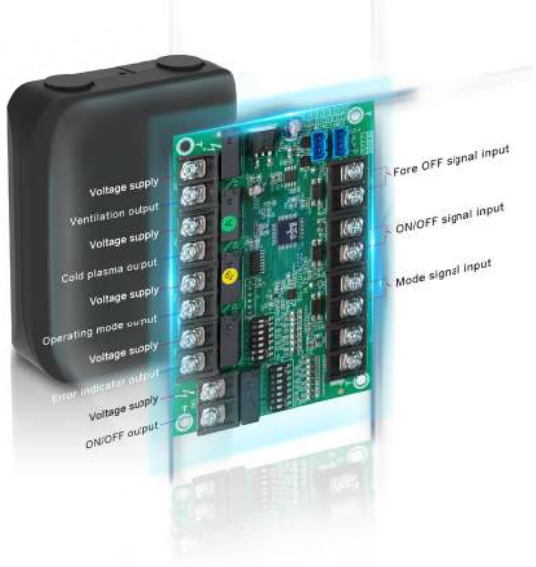

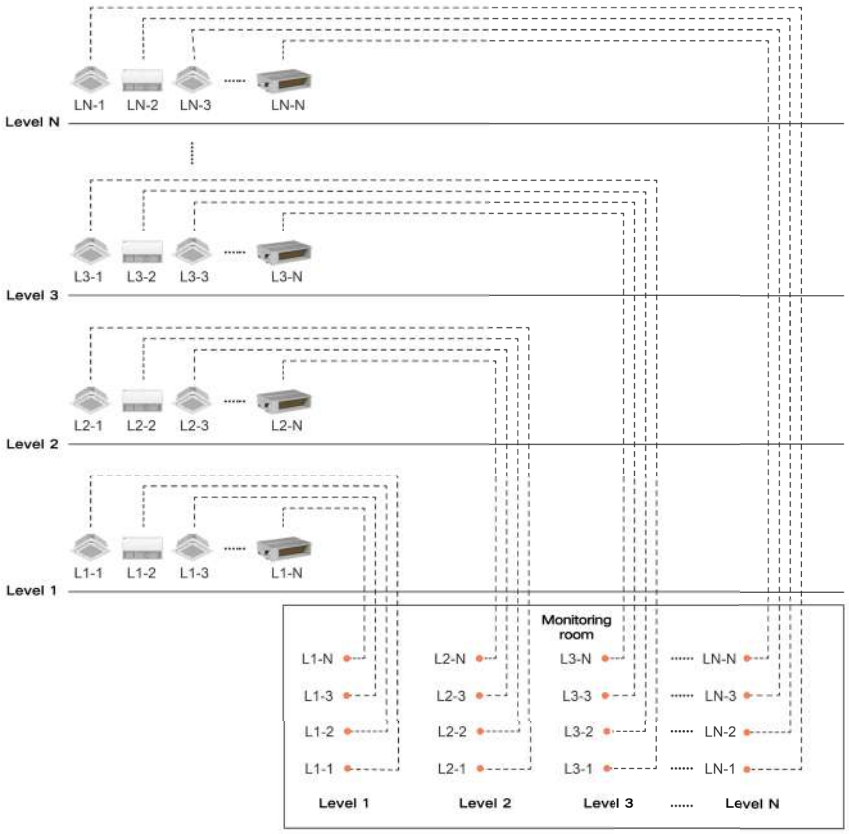

Application scenario: aircraft boarding bridge, public places, linking with units via ON/OFF signal control.

2.6 IDU (Indoor Unit)

2.6.1 Balanced Air Supply in 360°

- For cassette units, the panels can discharge air in 360°, with wider air supply range and even temperature distribution.

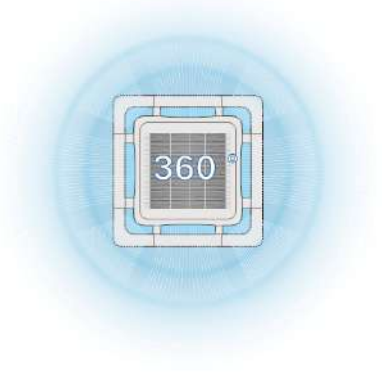

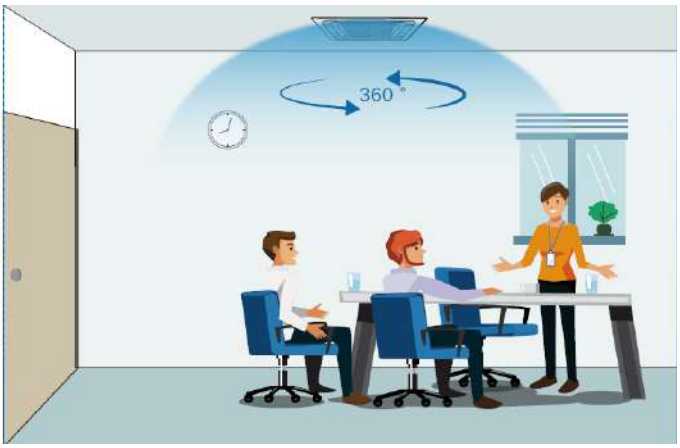

• Top-down Cooling and Bottom-up Heating

In cooling, the cool air will blow horizontally instead of directly blowing to people; while in heating, the warm air will blow vertically and then fall onto the ground.



Cooling



Heating

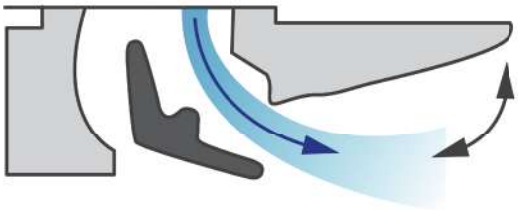

Horizontal air supply in cooling

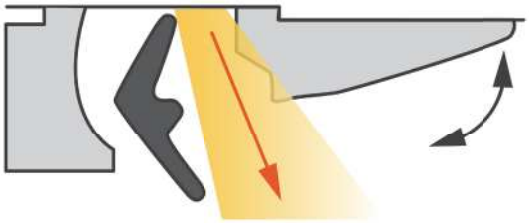

Vertical air supply in heating

- DC Drain Pump with High Lift

12V DC drain pump with 1000mm lift is standard for cassette units. It is energy-efficient and safe due to the DC design and weak current control.

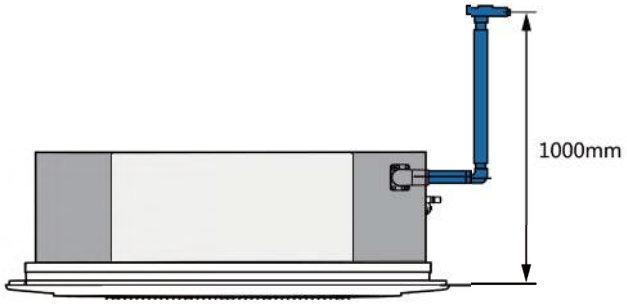

Standard drain pump with the lift up to 1000mm

2.6.2 Duct type

- Exquisite unit body

The duct unit is only 200mm thick and 450mm deep, which is suitable for spaces with different heights.

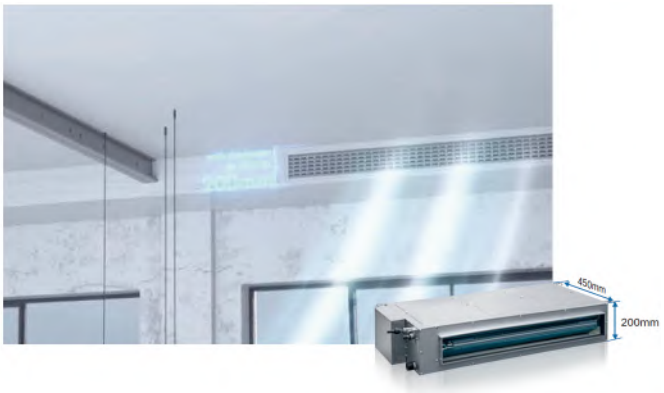

Note: applicable to duct units of "12" and "18" only.

• Adjustable External Static Pressure

Up to 9 static pressure stages with a maximum of 200Pa can be set. Static pressure can be adjusted according to the actual condition of the room and the air duct length, to suit different air volume requirements.

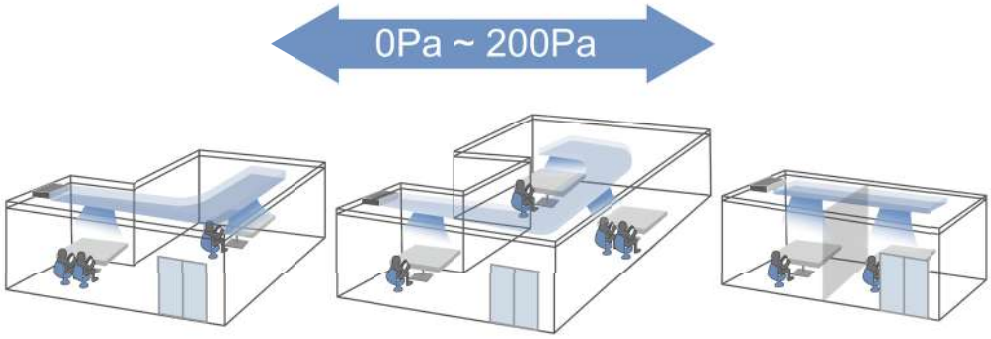

There are two air return modes to choose from for flexible installation: rear air return and bottom air return



Bottom air return



Rear air return

It can be connected to the fresh air duct to introduce fresh air from outside to ensure fresh indoor air.





• Drain Pump as standard

Duct units are equipped with drain pump with a lift of 1 000mm. User can adjust the installation height flexibly to meet theengineering requirements.



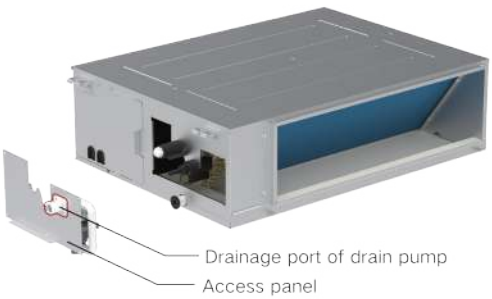

2.6.3 Floor Ceiling Unit

- Floor /Ceiling Installation

There are two installation options for users to choose.



Ceiling type installation





Floor type installation



- Dual Air Guide Louvers

Common Products	SINCLAIR
• For many products in the industry, their air outlets are easy to have mould because the air guide louvers cannot be closed completely to avoid dust.	• The dual air guide louvers can be closed completely to prevent dust and insects, thus no risk of mould growth.
 Air louver cannot be completely closed, which will lead to dust accumulation	 Air louvers can be completely closed to avoid dust

- Air volume two-stage pressurization technology

Unique backflow prevention fan blade can avoid secondary backflow of air supply and improve the efficiency of air supply.

The application of cavity variation technology changes the fluid cross-sectional area, creating a secondary pressure boost that increases the air supply distance by 2.5%.

Integrated backflow prevention board



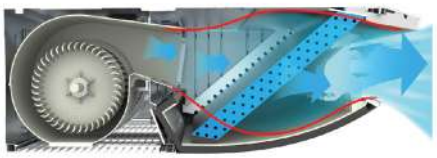

- 2-way air return

The 2-way air return design enlarges air return area and increases air volume by 7%.



- Multi-angle Air Supply

The floor ceiling type unit adopts dual air guide louvers and dislocation air swing structure to achieve multi-angle air supply

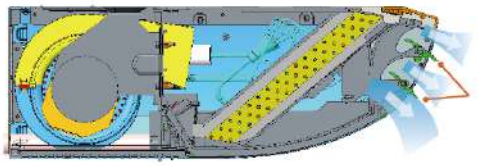

- Double air guide louvers with dislocation air swing structure simulate three-dimensional air supply.
  Double windshields are adopted to realize up and down swing at a large angle.

- The biggest swing angle of the upper air guide louver increased by 10°, for long-distance air supply.

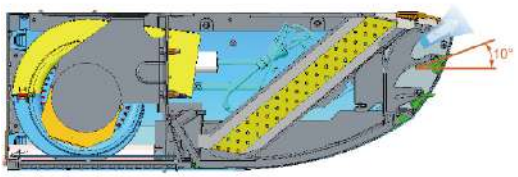

- The biggest swing angle of the lower air guide louver extended by 80°, covering the area right below the AC.

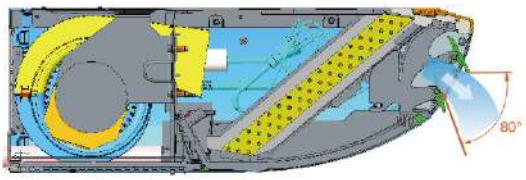

- Large-angle Swing Design

The swing louvers adopt independent distribution design, which allows the left and right air outlet angle to be adjusted freely according to different applications.

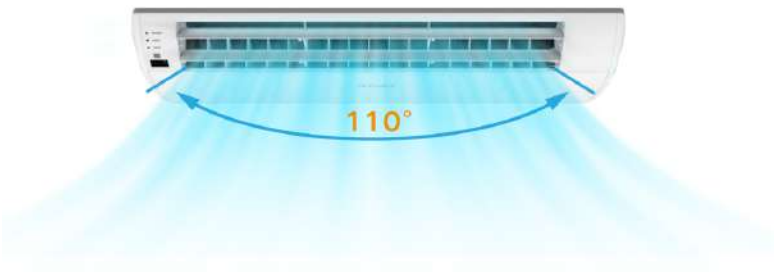

3 PRODUCT PARAMETERS

3.1 Cassette Type Data

Model	Indoor Unit		ASC-12BI2	ASC-18BI2	
	Outdoor Unit		ASGE-12BI2	ASGE-18BI2	
Rated Capacity	Cooling	kW	3.50	5.00	
	Heating	kW	4.00	5.60	
Input Power	Cooling	kW	0.92	1.47	
	Heating	kW	1.00	1.60	
EER/ COP		W/W	3.80/4.00	3.40/3.50	
SEER/SCOP		—	7.10/4.20	6.60/4.00	
Energy Class (Cooling /Heating)		—	A++/A+	A++/A+	
Indoor Unit			ASC-12BI2	ASC-18BI2	
Power Supply			220-240V ~50/60Hz		
Heat Exchanger		—	Inner Groove Copper Tube-Aluminum Fin		
Fan Motor	Type	—	Centrifugal Fan		
	Air Volume (SH/H/M/L)	m^3/h	600/550/500/400	720/650/600/500	
Filter		—	PP-MD10	PP-MD10	
Sound Pressure Level(SH/H/M/L)		dB(A)	36/35/33/29	43/41/39/35	
Connection Pipe	Liquid Pipe	in.	Φ1/4	Φ1/4	
	Gas Pipe	in.	Φ3/8	Φ1/2	
	Water Pipe	mm	Φ25×1.50	Φ25×1.50	
Dimensions (W×D×H)	Outline	mm	570×570×260	570×570×260	
	Package	mm	698×653×295	698×653×295	
Weight	Net/Gross	kg	16.5/21	16.5/21	
Panel Dimensions (W×D×H)	Outline	mm	620×620×47.5	620×620×47.5	
	Packaged	mm	693×693×115	693×693×115	
Panel Weight	Net/Gross	kg	3.0/4.5	3.0/4.5	
Outdoor Unit			ASGE-12BI2	ASGE-18BI2	
Heat Exchanger			Inner Groove Copper Tube-Aluminum Fin		
Power Supply			220-240V ~50/60Hz	220-240V ~50/60Hz	
Compressor	Model		FTz-AN108ACBD	QXF-A120zH170A	
	Type		Rotary	Rotary	
Fan Motor	Type	—	Axial Fan	Axial Fan	
	Air Volume	m^3/h	1800	2200	
Sound Pressure Level		dB(A)	48	52	
Refrigerant	Type		R32	R32	
	Weight	kg	0.57	0.85	
	Throttling Method		Electronic Expansion Valve		

Model	Indoor Unit		ASC-12BI2	ASC-18BI2	
	Outdoor Unit		ASGE-12BI2	ASGE-18BI2	
Connection Pipe	Liquid Pipe	in.	Φ1/4	Φ1/4	
	Gas Pipe	in.	Φ3/8	Φ1/2	
Refrigerant Pipe	Standard Length	m	5	5	
	Max. Length	m	30	30	
	Max. Height	m	15	20	
Dimensions (W×D×H)	Outline	mm	675×285×553	745×300×555	
	Package	mm	794×376×605	872×398×609	
Weight	Net/Gross	kg	24.5/27.0	30.5/33.0	

Model	Indoor Unit		ASC-24BI2	ASC-30BI2
	Outdoor Unit		ASGE-24BI2	ASGE-30BI2
Rated Capacity	Cooling	kW	7.10	8.50
	Heating	kW	7.80	8.80
Input Power	Cooling	kW	2.03	2.50
	Heating	kW	2.00	2.25
EER/ COP		W/W	3.50/3.90	3.40/3.90
SEER/SCOP		—	6.70/4.30	6.90/4.30
Energy Class (Cooling /Heating)		—	A++/A+	A++/A+
Indoor Unit			ASC-24BI2	ASC-30BI2
Power Supply			220-240V ~50/60Hz	
Heat Exchanger		—	Inner Groove Copper Tube-Aluminum Fin	
Fan Motor	Type	—	Centrifugal Fan	
	Air Volume (SH/H/M/L)	m^3/h	1100/1000/900/800	1400/1300/1100/1000
Filter		—	PP-MD10	PP-MD10
Sound Pressure Level(SH/H/M/L)		dB(A)	39/38/36/34	47/46/42/38
Connection Pipe	Liquid Pipe	in.	Φ3/8	Φ3/8
	Gas Pipe	in.	Φ5/8	Φ5/8
	Water Pipe	mm	Φ25×1.50	Φ25×1.50
Dimensions (W×D×H)	Outline	mm	840×840×200	840×840×200
	Package	mm	943×923×245	943×923×245
Weight	Net/Gross	kg	21.0/27.0	21.0/27.0
Panel Dimensions (W×D×H)	Outline	mm	950×950×52	950×950×52
	Packaged	mm	1033×1020×110	1033×1020×110
Panel Weight	Net/Gross	kg	6.0/9.5	6.0/9.5
Outdoor Unit			ASGE-24BI2	ASGE-30BI2
Heat Exchanger		—	Inner Groove Copper Tube-Aluminum Fin	
Power Supply			220-240V ~50/60Hz	
Compressor	Model		QXFS-M180zX170	QXFS-B238zX070
	Type		Rotary	Rotary
Fan Motor	Type	—	Axial Fan	Axial Fan
	Air Volume	m^3/h	3600	3600

Model	Indoor Unit		ASC-24BI2	ASC-30BI2
	Outdoor Unit		ASGE-24BI2	ASGE-30BI2
Sound Pressure Level		dB(A)	55	57
Refrigerant	Type		R32	R32
	Weight	kg	1.5	1.5
	Throttling Method		Electronic Expansion Valve	
Connection Pipe	Liquid Pipe	in.	Φ3/8	Φ3/8
	Gas Pipe	in.	Φ5/8	Φ5/8
Refrigerant Pipe	Standard Length	m	5	5
	Max. Length	m	30	30
	Max. Height	m	20	25
Dimensions (W×D×H)	Outline	mm	889×340×660	889×340×660
	Package	mm	1032×456×730	1032×456×730
Weight	Net/Gross	kg	41.5/45.0	46.0/50.0

Model	Indoor Unit		ASC-36BI2	ASC-42BI2	ASC-48BI2
	Outdoor Unit		ASGE-36BI2	ASGE-42BI2	ASGE-48BI2
Rated Capacity	Cooling	kW	10.50	12.10	13.40
	Heating	kW	11.50	13.50	15.50
Input Power	Cooling	kW	3.10	3.90	4.60
	Heating	kW	2.95	4.00	4.70
EER/ COP		W/W	3.40/3.90	3.10/3.40	2.91/3.30
SEER/SCOP		—	6.60/4.40	6.10/4.10	6.30/4.00
Energy Class (Cooling /Heating)		—	A++/A+	A++/A+	A++/A+
Indoor Unit			ASC-36BI2	ASC-42BI2	ASC-48BI2
Power Supply			220-240V ~50/60Hz		
Heat Exchanger		—	Inner Groove Copper Tube-Aluminum Fin		
Fan Motor	Type	—	Centrifugal Fan		
	Air Volume (SH/H/M/L)	m^3/h	1500/1400/1200/1000	1700/1500/1300/1100	2000/1800/1600/1400
Filter		—	PP-MD10	PP-MD10	PP-MD10
Sound Pressure Level(SH/H/M/L)		dB(A)	43/41/39/38	48/46/43/39	50/48/45/41
Connection Pipe	Liquid Pipe	in.	Φ3/8	Φ3/8	Φ3/8
	Gas Pipe	in.	Φ5/8	Φ5/8	Φ5/8
	Water Pipe	mm	Φ25×1.50	Φ25×1.50	Φ25×1.50
Dimensions (W×D×H)	Outline	mm	840×840×240	840×840×240	840×840×290
	Package	mm	933×903×272	933×903×272	933×903×335
Weight	Net/Gross	kg	23/29	23/29	25/32
Panel Dimensions (W×D×H)	Outline	mm	950×950×52	950×950×52	950×950×52
	Packaged	mm	1033×1020×110	1033×1020×110	1033×1020×110
Panel Weight	Net/Gross	kg	6.0/9.5	6.0/9.5	6.0/9.5
Outdoor Unit			ASGE-36BI2	ASGE-42BI2	ASGE-48BI2
Heat Exchanger		—	Inner Groove Copper Tube-Aluminum Fin		
Power Supply			220-240V ~50/60Hz		

Model	Indoor Unit		ASC-36BI2	ASC-42BI2	ASC-48BI2
	Outdoor Unit		ASGE-36BI2	ASGE-42BI2	ASGE-48BI2
Compressor	Model		QXFS-D280zX070	QXFS-D280zX070	QXFS-D280zX070B
	Type		Rotary	Rotary	Rotary
Fan Motor	Type	—	Axial Fan	Axial Fan	Axial Fan
	Air Volume	m³/h	4800	5200	5200
Sound Pressure Level		dB(A)	57	58	59
Refrigerant	Type		R32	R32	R32
	Weight	kg	2.10	2.25	2.80
	Throttling Method		Electronic Expansion Valve		
Connection Pipe	Liquid Pipe	in.	Φ3/8	Φ3/8	Φ3/8
	Gas Pipe	in.	Φ5/8	Φ5/8	Φ5/8
Refrigerant Pipe	Standard Length	m	5	5	7.5
	Max. Length	m	75	75	75
	Max. Height	m	30	30	30
Dimensions (W×D×H)	Outline	mm	940×370×820	940×370×820	940×370×820
	Package	mm	1093×497×885	1093×497×885	1093×497×885
Weight	Net/Gross	kg	65.0/72.0	66.0/73.0	73.0/80.0

Model	Indoor Unit		ASC-36BI2	ASC-42BI2	ASC-48BI2	ASC-60BI2
	Outdoor Unit		ASGE-36BI2-3	ASGE-42BI2-3	ASGE-48BI2-3	ASGE-60BI2-3
Rated Capacity	Cooling	kW	10.50	12.10	13.40	14.50
	Heating	kW	11.50	13.50	15.50	17.00
Input Power	Cooling	kW	3.10	3.90	4.60	5.30
	Heating	kW	2.95	4.00	4.70	5.70
EER/ COP		W/W	3.40/3.90	3.10/3.40	2.91/3.30	2.74/2.98
SEER/SCOP		—	6.60/4.40	6.10/4.10	6.30/4.00	6.10/4.00
Energy Class (Cooling /Heating)		—	A++/A+	A++/A+	A++/A+	A++/A+
Indoor Unit			ASC-36BI2	ASC-42BI2	ASC-48BI2	ASC-60BI2
Power Supply			220-240V ~50/60Hz			
Heat Exchanger		—	Inner Groove Copper Tube-Aluminum Fin			
Fan Motor	Type	—	Centrifugal Fan			
	Air Volume (SH/H/M/L)	m³/h	1500/1400/ 1200/1000	1700/1500/ 1300/1100	2000/1800/ 1600/1400	2300/2100/ 1900/1600
Filter		—	PP-MD10	PP-MD10	PP-MD10	PP-MD10
Sound Pressure Level(SH/H/M/L)		dB(A)	43/41/39/38	48/46/43/39	50/48/45/41	52/50/48/44
Connection Pipe	Liquid Pipe	in.	Φ3/8	Φ3/8	Φ3/8	Φ3/8
	Gas Pipe	in.	Φ5/8	Φ5/8	Φ5/8	Φ5/8
	Water Pipe	mm	Φ25×1.50	Φ25×1.50	Φ25×1.50	Φ25×1.50
Dimensions (W×D×H)	Outline	mm	840×840×240	840×840×240	840×840×290	840×840×290
	Package	mm	933×903×272	933×903×272	933×903×335	933×903×335
Weight	Net/Gross	kg	23/29	23/29	25/32	26.0/33.0
Panel Dimensions (W×D×H)	Outline	mm	950×950×52	950×950×52	950×950×52	950×950×52
	Packaged	mm	1033×1020×110	1033×1020×110	1033×1020×110	1033×1020×110

Model	Indoor Unit		ASC-36BI2	ASC-42BI2	ASC-48BI2	ASC-60BI2
	Outdoor Unit		ASGE-36BI2-3	ASGE-42BI2-3	ASGE-48BI2-3	ASGE-60BI2-3
Panel Weight	Net/Gross	kg	6.0/9.5	6.0/9.5	6.0/9.5	6.0/9.5
Outdoor Unit			ASGE-36BI2-3	ASGE-42BI2-3	ASGE-48BI2-3	ASGE-60BI2-3
Heat Exchanger		—	Inner Groove Copper Tube-Aluminum Fin			
Power Supply			380-415V 3N~50/60Hz			
Compressor	Model		QXFS-D280zX070	QXFS-D280zX070	QXFS-D280zX070	QXFS-D388zX050A
	Type		Rotary	Rotary	Rotary	Rotary
Fan Motor	Type	—	Axial Fan	Axial Fan	Axial Fan	Axial fan
	Air Volume	m^3/h	4800	5200	5200	5500
Sound Pressure Level		dB(A)	57	58	59	60
Refrigerant	Type		R32	R32	R32	R32
	Weight	kg	2.10	2.25	2.80	3.50
	Throttling Method		Electronic Expansion Valve			
Connection Pipe	Liquid Pipe	in.	Φ3/8	Φ3/8	Φ3/8	Φ3/8
	Gas Pipe	in.	Φ5/8	Φ5/8	Φ5/8	Φ5/8
Refrigerant Pipe	Standard Length	m	5	5	7.5	7.5
	Max. Length	m	75	75	75	75
	Max. Height	m	30	30	30	30
Dimensions (W×D×H)	Outline	mm	940×370×820	940×370×820	940×370×820	990×370×960
	Package	mm	1093×497×885	1093×497×885	1093×497×885	1153×478×1110
Weight	Net/Gross	kg	75.0/82.0	76.0/83.0	81.0/88.0	94.0/103.0

Notes:

1. The above data are based on the following conditions.

—	Cooling	Heating
Indoor	DB:27°C / WB:19°C	DB:20°C / WB:15°C
Outdoor	DB:35°C / WB:24°C	DB:7°C / WB:6°C

2. The sound pressure level is tested in the anechoic room. It would be somewhat different in the actual operation due to environmental change. Indoor and outdoor sound levels are determined in an anechoic chamber and may differ once the unit is installed due to ambient conditions.

3.2 Duct Type Data

Model	Indoor Unit		ASD-12BI2	ASD-18BI2	ASD-24BI2	ASD-30BI2
	Outdoor Unit		ASGE-12BI2	ASGE-18BI2	ASGE-24BI2	ASGE-30BI2
Rated Capacity	Cooling	kW	3.50	5.30	7.10	8.50
	Heating	kW	4.00	5.60	8.00	8.80
Input Power	Cooling	kW	1.03	1.51	1.92	2.50
	Heating	kW	1.00	1.42	2.00	2.25
EER/ COP		W/W	3.40/4.00	3.50/3.95	3.70/4.00	3.40/3.90
SEER/SCOP		—	6.50/4.00	6.30/4.00	6.60/4.10	6.40/4.10
Energy Class (Cooling /Heating)		—	A++/A+	A++/A+	A++/A+	A++/A+
Indoor Unit			ASD-12BI2	ASD-18BI2	ASD-24BI2	ASD-30BI2
Power Supply			220-240V ~50/60Hz			
Heat Exchanger		—	Inner Groove Copper Tube-Aluminum Fin			
Fan Motor	Type	—	Centrifugal Fan			
	Air Volume (SH/H/M/L)	m³/h	600/550/500/400	900/800/700/600	1100/1000/900/800	1400/1300/1100/1000
	External Static Pressure Standard	Pa	25	25	25	37
Filter		—	PP	PP	PP	PP
Sound Pressure Level(SH/H/M/L)		dB(A)	35/33/32/30	36/35/33/31	37/35/33/31	43/41/39/37
Connection Pipe	Liquid Pipe	in.	Φ1/4	Φ1/4	Φ3/8	Φ3/8
	Gas Pipe	in.	Φ3/8	Φ1/2	Φ5/8	Φ5/8
	Water Pipe	mm	Φ26×2.5	Φ26×2.5	Φ26×2.5	Φ26×2.5
Dimensions (W×D×H)	Outline	mm	700×450×200	1000×450×200	900×655×260	900×655×260
	Package	mm	1008×568×275	1308×568×275	1115×772×320	1115×772×320
Weight without Drain Pump	Net/Gross	kg	17.0/21.0	23.0/28.0	28.5/32.5	28.5/32.5
Weight with Drain Pump		kg	18.0/22.0	24.0/29.0	29.5/33.5	29.5/33.5
Outdoor Unit			ASGE-12BI2	ASGE-18BI2	ASGE-24BI2	ASGE-30BI2
Heat Exchanger			Inner Groove Copper Tube-Aluminum Fin			
Power Supply			220-240V ~50/60Hz			
Compressor	Model		FTz-AN108ACBD	QXF-A120zH170A	QXFS-M180zX170	QXFS-B238zX070
	Type		Rotary	Rotary	Rotary	Rotary
Fan Motor	Type	—	Axial Fan	Axial Fan	Axial Fan	Axial Fan
	Air Volume	m³/h	1800	2200	3600	3600
Sound Pressure Level		dB(A)	48	52	55	57
Refrigerant	Type		R32	R32	R32	R32
	Weight	kg	0.57	0.85	1.50	1.50
	Throttling Method		Electronic Expansion Valve			

Model	Indoor Unit		ASD-12BI2	ASD-18BI2	ASD-24BI2	ASD-30BI2
	Outdoor Unit		ASGE-12BI2	ASGE-18BI2	ASGE-24BI2	ASGE-30BI2
Connection Pipe	Liquid Pipe	in.	Φ1/4	Φ1/4	Φ3/8	Φ3/8
	Gas Pipe	in.	Φ3/8	Φ1/2	Φ5/8	Φ5/8
Refrigerant Pipe	Standard Length	m	5	5	5	5
	Max. Length	m	30	30	30	30
	Max. Height	m	15	20	20	25
Dimensions (W×D×H)	Outline	mm	675×285×553	745×300×555	889×340×660	889×340×660
	Package	mm	794×376×605	872×398×609	1032×456×730	1032×456×730
Weight	Net/Gross	kg	24.5/27.0	30.5/33.0	41.5/45.0	46.0/50.0

Model	Indoor Unit		ASD-36BI2	ASD-42BI2	ASD-48BI2
	Outdoor Unit		ASGE-36BI2	ASGE-42BI2	ASGE-48BI2
Rated Capacity	Cooling	kW	10.50	12.10	13.40
	Heating	kW	11.50	13.50	15.50
Input Power	Cooling	kW	3.00	3.58	4.50
	Heating	kW	2.80	3.70	4.50
EER/ COP		W/W	3.50/4.10	3.38/3.65	2.98/3.44
SEER/SCOP		—	6.40/4.20	6.10/4.10	6.10/4.00
Energy Class (Cooling /Heating)		—	A++/A+	A++/A+	A++/A+
Indoor Unit			ASD-36BI2	ASD-42BI2	ASD-48BI2
Power Supply			220-240V ~50/60Hz		
Heat Exchanger		—	Inner Groove Copper Tube-Aluminum Fin		
Fan Motor	Type	—	Centrifugal Fan		
	Air Volume (SH/H/M/L)	m^3/h	1700/1600/1400/1200	2000/1800/1600/1400	2300/2100/1800/1500
	External Static Pressure Standard	Pa	37	50	50
Filter		—	PP	PP	PP
Sound Pressure Level(SH/H/M/L)		dB(A)	39/38/37/36	43/42/41/40	43/42/40/38
Connection Pipe	Liquid Pipe	in.	Φ3/8	Φ3/8	Φ3/8
	Gas Pipe	in.	Φ5/8	Φ5/8	Φ5/8
	Water Pipe	mm	Φ26×2.5	Φ26×2.5	Φ26×2.5
Dimensions (W×D×H)	Outline	mm	1340×655×260	1340×655×260	1400×700×300
	Package	mm	1568×770×323	1568×770×323	1601×813×365
Weight without Drain Pump	Net/Gross	kg	42.0/48.0	42.0/48.0	51.0/57.0
Weight with Drain Pump		kg	43.0/49.0	43.0/49.0	52.0/58.0
Outdoor Unit			ASGE-36BI2	ASGE-42BI2	ASGE-48BI2
Heat Exchanger			Inner Groove Copper Tube-Aluminum Fin		
Power Supply			220-240V ~50/60Hz		

Model	Indoor Unit		ASD-36BI2	ASD-42BI2	ASD-48BI2
	Outdoor Unit		ASGE-36BI2	ASGE-42BI2	ASGE-48BI2
Compressor	Model		QXFS-D280zX070	QXFS-D280zX070	QXFS- D280zX070B
	Type		Rotary	Rotary	Rotary
Fan Motor	Type	—	Axial Fan	Axial Fan	Axial Fan
	Air Volume	m³/h	4800	5200	5200
Sound Pressure Level		dB(A)	57	58	59
Refrigerant	Type		R32	R32	R32
	Weight	kg	2.1	2.25	2.80
	Throttling Method		Electronic Expansion Valve		
Connection Pipe	Liquid Pipe	in.	Φ3/8	Φ3/8	Φ3/8
	Gas Pipe	in.	Φ5/8	Φ5/8	Φ5/8
Refrigerant Pipe	Standard Length	m	5	5	7.5
	Max. Length	m	75	75	75
	Max. Height	m	30	30	30
Dimensions (W×D×H)	Outline	mm	940×370×820	940×370×820	940×370×820
	Package	mm	1093×497×885	1093×497×885	1093×497×885
Weight	Net/Gross	kg	65.0/72.0	66.0/73.0	73.0/80.0

Model	Indoor Unit		ASD-36BI2	ASD-42BI2	ASD-48BI2	ASD-60BI2
	Outdoor Unit		ASGE-36BI2-3	ASGE-42BI2-3	ASGE-48BI2-3	ASGE-60BI2-3
Rated Capacity	Cooling	kW	10.50	12.10	13.40	16.00
	Heating	kW	11.50	13.50	15.50	17.00
Input Power	Cooling	kW	3.00	3.58	4.50	5.40
	Heating	kW	2.80	3.70	4.50	4.70
EER/ COP		W/W	3.50/4.10	3.38/3.65	2.98/3.44	2.96/3.62
SEER/SCOP		—	6.40/4.20	6.10/4.10	6.10/4.00	6.10/4.00
Energy Class (Cooling /Heating)		—	A++/A+	A++/A+	A++/A+	A++/A+
Indoor Unit			ASD-36BI2	ASD-42BI2	ASD-48BI2	ASD-60BI2
Power Supply			220-240V ~50/60Hz			
Heat Exchanger		—	Inner Groove Copper Tube-Aluminum Fin			
Fan Motor	Type	—	Centrifugal Fan			
	Air Volume (SH/H/M/L)	m³/h	1700/1600/ 1400/1200	2000/1800/ 1600/1400	2300/2100/ 1800/1500	2600/2300/ 2000/1700
	External Static Pressure Standard	Pa	37	50	50	50
Filter		—	PP	PP	PP	PP
Sound Pressure Level (SH/H/M/L)		dB(A)	39/38/37/36	43/42/41/40	43/42/40/38	46/44/42/40

Model	Indoor Unit		ASD-36BI2	ASD-42BI2	ASD-48BI2	ASD-60BI2
	Outdoor Unit		ASGE-36BI2-3	ASGE-42BI2-3	ASGE-48BI2-3	ASGE-60BI2-3
Connection Pipe	Liquid Pipe	in.	Φ3/8	Φ3/8	Φ3/8	Φ3/8
	Gas Pipe	in.	Φ5/8	Φ5/8	Φ5/8	Φ5/8
	Water Pipe	mm	Φ26×2.5	Φ26×2.5	Φ26×2.5	Φ26×2.5
Dimensions (W×D×H)	Outline	mm	1340×655×260	1340×655×260	1400×700×300	1400×700×300
	Package	mm	1568×770×323	1568×770×323	1601×813×365	1601×813×365
Weight without Drain Pump	Net/Gross	kg	42.0/48.0	42.0/48.0	51.0/57.0	54.0/61.0
Weight with Drain Pump		kg	43.0/49.0	43.0/49.0	52.0/58.0	55.0/62.0
Outdoor Unit			ASGE-36BI2-3	ASGE-42BI2-3	ASGE-48BI2-3	ASGE-60BI2-3
Heat Exchanger			Inner Groove Copper Tube-Aluminum Fin			
Power Supply			380-415V 3N~50/60Hz			
Compressor	Model		QXFS-D280zX070	QXFS-D280zX070	QXFS- D280zX070	QXFS-D388zX050A
	Type		Rotary	Rotary	Rotary	Rotary
Fan Motor	Type	—	Axial Fan	Axial Fan	Axial Fan	Axial fan
	Air Volume	m^3/h	4800	5200	5200	5500
Sound Pressure Level		dB(A)	57	58	59	60
Refrigerant	Type		R32	R32	R32	R32
	Weight	kg	2.1	2.25	2.80	3.50
	Throttling Method		Electronic Expansion Valve			
Connection Pipe	Liquid Pipe	in.	Φ3/8	Φ3/8	Φ3/8	Φ3/8
	Gas Pipe	in.	Φ5/8	Φ5/8	Φ5/8	Φ5/8
Refrigerant Pipe	Standard Length	m	5	5	7.5	7.5
	Max. Length	m	75	75	75	75
	Max. Height	m	30	30	30	30
Dimensions (W×D×H)	Outline	mm	940×370×820	940×370×820	940×370×820	990×370×960
	Package	mm	1093×497×885	1093×497×885	1093×497×885	1153×478×1110
Weight	Net/Gross	kg	75.0/82.0	76.0/83.0	81.0/88.0	94.0/103.0

Notes:

1. The above data are based on the following conditions.

—	Cooling	Heating
Indoor	DB:27°C / WB:19°C	DB:20°C / WB:15°C
Outdoor	DB:35°C / WB:24°C	DB:7°C / WB:6°C

2. Airflow volume was measured under applicable standard external static pressure
3. The sound pressure level is tested in the anechoic room. It would be somewhat different in the actual operation due to environmental change. Indoor and outdoor sound levels are determined in an anechoic chamber and may differ once the unit is installed due to ambient conditions.

3.3 Floor Ceiling Type Data

Model	Indoor Unit		ASF-12BI2	ASF-18BI2	ASF-24BI2	ASF-30BI2
	Outdoor Unit		ASGE-12BI2	ASGE-18BI2	ASGE-24BI2	ASGE-30BI2
Rated Capacity	Cooling	kW	3.50	5.30	7.10	8.50
	Heating	kW	4.00	5.60	7.70	8.80
Input Power	Cooling	kW	0.92	1.56	2.03	2.50
	Heating	kW	0.93	1.44	1.95	2.25
EER/ COP		W/W	3.80/4.30	3.40/3.90	3.50/3.95	3.40/3.90
SEER/SCOP		—	7.20/4.10	6.50/4.20	7.20/4.30	6.80/4.50
Energy Class (Cooling /Heating)		—	A++/A+	A++/A+	A++/A+	A++/A+
Indoor Unit			ASF-12BI2	ASF-18BI2	ASF-24BI2	ASF-30BI2
Power Supply			220-240V ~50/60Hz			
Heat Exchanger		—	Inner Groove Copper Tube-Aluminum Fin			
Fan Motor	Type	—	Centrifugal Fan			
	Air Volume (SH/H/M/L)	m³/h	650/600/500/400	900/800/700/600	1250/1100/1000/900	1400/1300/1200/1000
Filter		—	PP	PP	PP	PP
Sound Pressure Level (SH/H/M/L)		dB(A)	35/34/31/28	41/40/38/36	41/39/37/35	46/45/43/39
Connection Pipe	Liquid Pipe	in.	Φ1/4	Φ1/4	Φ3/8	Φ3/8
	Gas Pipe	in.	Φ3/8	Φ1/2	Φ5/8	Φ5/8
	Water Pipe	mm	Φ17×1.5	Φ17×1.5	Φ17×1.5	Φ17×1.5
Dimensions (W×D×H)	Outline	mm	870×665×235	870×665×235	1200×665×235	1200×665×235
	Package	mm	973×770×300	973×770×300	1303×770×300	1303×770×300
Weight	Net/Gross	kg	24.0/28.0	25.0/29.0	31.0/36.0	32.0/37.0
Outdoor Unit			ASGE-12BI2	ASGE-18BI2	ASGE-24BI2	ASGE-30BI2
Heat Exchanger			Inner Groove Copper Tube-Aluminum Fin			
Power Supply			220-240V ~50/60Hz			
Compressor	Model		FTz-AN108ACBD	QXF-A120zH170A	QXFS-M180zX170	QXFS-B238zX070
	Type		Rotary	Rotary	Rotary	Rotary
Fan Motor	Type	—	Axial Fan	Axial Fan	Axial Fan	Axial Fan
	Air Volume	m³/h	1800	2200	3600	3600
Sound Pressure Level		dB(A)	48	52	55	57
Refrigerant	Type		R32	R32	R32	R32
	Weight	kg	0.57	0.85	1.5	1.5
	Throttling Method		Electronic Expansion Valve			
Connection Pipe	Liquid Pipe	in.	Φ1/4	Φ1/4	Φ3/8	Φ3/8
	Gas Pipe	in.	Φ3/8	Φ1/2	Φ5/8	Φ5/8
Refrigerant Pipe	Standard Length	m	5	5	5	5
	Max. Length	m	30	30	30	30
	Max. Height	m	15	20	20	25

Model	Indoor Unit		ASF-12BI2	ASF-18BI2	ASF-24BI2	ASF-30BI2
	Outdoor Unit		ASGE-12BI2	ASGE-18BI2	ASGE-24BI2	ASGE-30BI2
Dimensions (W×D×H)	Outline	mm	675×285×553	745×300×555	889×340×660	889×340×660
	Package	mm	794×376×605	872×398×609	1032×456×730	1032×456×730
Weight	Net/Gross	kg	24.5/27.0	30.5/33.0	41.5/45.0	46/50.0

Model	Indoor Unit		ASF-36BI2	ASF-42BI2	ASF-48BI2
	Outdoor Unit		ASGE-36BI2	ASGE-42BI2	ASGE-48BI2
Rated Capacity	Cooling	kW	10.00	12.10	13.40
	Heating	kW	11.50	13.5 0	15.50
Input Power	Cooling	kW	2.94	3.67	4.30
	Heating	kW	2.95	3.75	4.20
EER/ COP		W/W	3.40/3.90	3.30/3.60	3.12/3.69
SEER/SCOP		—	6.30/4.20	6.30/4.00	6.30/4.00
Energy Class (Cooling /Heating)		—	A++/A+	A++/A+	A++/A+
Indoor Unit			ASF-36BI2	ASF-42BI2	ASF-48BI2
Power Supply			220-240V ~50/60Hz		
Heat Exchanger		—	Inner Groove Copper Tube-Aluminum Fin		
Fan Motor	Type	—	Centrifugal Fan		
	Air Volume (SH/H/M/L)	m^3/h	1600/1500/1400/1200	1900/1800/1600/1400	2300/2100/1800/1500
Filter		—	PP	PP	PP
Sound Pressure Level(SH/H/M/L)		dB(A)	48/46/45/43	45/43/40/38	51/48/45/43
Connection Pipe	Liquid Pipe	in.	Φ3/8	Φ3/8	Φ3/8
	Gas Pipe	in.	Φ5/8	Φ5/8	Φ5/8
	Water Pipe	mm	Φ17×1.5	Φ17×1.5	Φ17×1.5
Dimensions (W×D×H)	Outline	mm	1200×665×235	1570×665×235	1570×665×235
	Package	mm	1303×770×300	1669×770×300	1669×770×300
Weight	Net/Gross	kg	32.0/37.0	39.5/46.5	42.0/49.0
Outdoor Unit			ASGE-36BI2	ASGE-42BI2	ASGE-48BI2
Heat Exchanger			Inner Groove Copper Tube-Aluminum Fin		
Power Supply			220-240V ~50/60Hz		
Compressor	Model		QXFS-D280zX070	QXFS-D280zX070	QXFS-D280zX070B
	Type		Rotary	Rotary	Rotary
Fan Motor	Type	—	Axial Fan	Axial Fan	Axial Fan
	Air Volume	m^3/h	4800	5200	5200
Sound Pressure Level		dB(A)	57	58	59
Refrigerant	Type		R32	R32	R32
	Weight	kg	2.1	2.25	2.80
	Throttling Method		Electronic Expansion Valve		
Connection Pipe	Liquid Pipe	in.	Φ3/8	Φ3/8	Φ3/8
	Gas Pipe	in.	Φ5/8	Φ5/8	Φ5/8

Model	Indoor Unit		ASF-36BI2	ASF-42BI2	ASF-48BI2
	Outdoor Unit		ASGE-36BI2	ASGE-42BI2	ASGE-48BI2
Refrigerant Pipe	Standard Length	m	5	5	7.5
	Max. Length	m	75	75	75
	Max. Height	m	30	30	30
Dimensions (W×D×H)	Outline	mm	940×370×820	940×370×820	940×370×820
	Package	mm	1093×497×885	1093×497×885	1093×497×885
Weight	Net/Gross	kg	65.0/72.0	66.0/73.0	73.0/80.0

Model	Indoor Unit		ASF-36BI2	ASF-42BI2	ASF-48BI2	ASF-60BI2
	Outdoor Unit		ASGE-36BI2-3	ASGE-42BI2-3	ASGE-48BI2-3	ASGE-60BI2-3
Rated Capacity	Cooling	kW	10.00	12.10	13.40	16.00
	Heating	kW	11.50	13.50	15.50	17.00
Input Power	Cooling	kW	2.94	3.67	4.30	5.30
	Heating	kW	2.95	3.75	4.20	4.80
EER/ COP		W/W	3.40/3.90	3.30/3.60	3.12/3.69	3.02/3.54
SEER/SCOP		—	6.30/4.20	6.30/4.00	6.30/4.00	6.10/4.00
Energy Class (Cooling /Heating)		—	A++/A+	A++/A+	A++/A+	A++/A+
Indoor Unit			ASF-36BI2	ASF-42BI2	ASF-48BI2	ASF-60BI2
Power Supply			220-240V ~50/60Hz			
Heat Exchanger		—	Inner Groove Copper Tube-Aluminum Fin			
Fan Motor	Type	—	Centrifugal Fan			
	Air Volume (SH/H/M/L)	m³/h	1600/1500/ 1400/1200	1900/1800/ 1600/1400	2300/2100/ 1800/1500	2400/2200/ 1900/1600
Filter		—	PP	PP	PP	PP
Sound Pressure Level(SH/H/M/L)		dB(A)	48/46/45/43	45/43/40/38	51/48/45/43	53/51/48/44
Connection Pipe	Liquid Pipe	in.	Φ3/8	Φ3/8	Φ3/8	Φ3/8
	Gas Pipe	in.	Φ5/8	Φ5/8	Φ5/8	Φ5/8
	Water Pipe	mm	Φ17×1.5	Φ17×1.5	Φ17×1.5	Φ17×1.5
Dimensions (W×D×H)	Outline	mm	1200×665×235	1570×665×235	1570×665×235	1570×665×235
	Package	mm	1303×770×300	1669×770×300	1669×770×300	1669×770×300
Weight	Net/Gross	kg	32.0/37.0	39.5/46.5	42.0/49.0	42.0/49.0
Outdoor Unit			ASGE-36BI2-3	ASGE-42BI2-3	ASGE-48BI2-3	ASGE-60BI2-3
Heat Exchanger			Inner Groove Copper Tube-Aluminum Fin			
Power Supply			380-415V 3N~50/60Hz			
Compressor	Model		QXFS-D280zX070	QXFS-D280zX070	QXFS-D280zX070B	QXFS-D388zX050A
	Type		Rotary	Rotary	Rotary	Rotary
Fan Motor	Type	—	Axial Fan	Axial Fan	Axial Fan	Axial fan
	Air Volume	m³/h	4800	5200	5200	5500
Sound Pressure Level		dB(A)	57	58	59	60
Refrigerant	Type		R32	R32	R32	R32
	Weight	kg	2.1	2.25	2.80	3.50
	Throttling Method		Electronic Expansion Valve			

Model	Indoor Unit		ASF-36BI2	ASF-42BI2	ASF-48BI2	ASF-60BI2
	Outdoor Unit		ASGE-36BI2-3	ASGE-42BI2-3	ASGE-48BI2-3	ASGE-60BI2-3
Connection Pipe	Liquid Pipe	in.	Φ3/8	Φ3/8	Φ3/8	Φ3/8
	Gas Pipe	in.	Φ5/8	Φ5/8	Φ5/8	Φ5/8
Refrigerant Pipe	Standard Length	m	5	5	7.5	7.5
	Max. Length	m	75	75	75	75
	Max. Height	m	30	30	30	30
Dimensions (W×D×H)	Outline	mm	940×370×820	940×370×820	940×370×820	990×370×960
	Package	mm	1093×497×885	1093×497×885	1093×497×885	1153×478×1110
Weight	Net/Gross	kg	75.0/82.0	76.0/83.0	81.0/88.0	94.0/103.0

Notes:

1. The above data are based on the following conditions.

—	Cooling	Heating
Indoor	DB:27°C / WB:19°C	DB:20°C / WB:15°C
Outdoor	DB:35°C / WB:24°C	DB:7°C / WB:6°C

2. Airflow volume was measured under applicable standard external static pressure
3. The sound pressure level is tested in the anechoic room. It would be somewhat different in the actual operation due to environmental change. Indoor and outdoor sound levels are determined in an anechoic chamber and may differ once the unit is installed due to ambient conditions.

4 OPERATION RANGE

—	Cooling	Heating
Outdoor temperature DB(°C)	-20~52	-20~24
Indoor temperature DB/WB(°C) (Maximum)	32/23	27/-

5 CAPACITY CORRECTION

5.1 Table of Performance Correction

5.1.1 Cassette Type

ASC-12BI2
Cooling

Fan speed	Indoor air temperature		Outdoor dry bulb temperature															
			25			30			35			40			46				
			TC	SHC	PI	TC	SHC	PI	TC	SHC	PI	TC	SHC	PI	TC	SHC	PI	
	DB	WB	kW	kW	kW	kW	kW	kW	kW	kW	kW	kW	kW	kW	kW	kW	kW	
Turbo	20	14	3.26	2.80	0.71	3.24	2.78	0.80	3.11	2.67	0.85	2.99	2.56	0.88	2.74	2.35	0.96	
	24	17	3.46	3.03	0.75	3.44	3.01	0.84	3.30	2.89	0.89	3.17	2.77	0.93	2.91	2.54	1.00	
	26	18	3.60	3.19	0.77	3.58	3.17	0.87	3.43	3.04	0.92	3.29	2.92	0.95	3.02	2.68	1.03	
	27	19	3.67	3.27	0.77	3.65	3.25	0.87	3.50	3.12	0.92	3.36	3.00	0.96	3.08	2.75	1.04	
	30	22	3.89	3.51	0.79	3.87	3.49	0.90	3.71	3.35	0.95	3.56	3.22	0.99	3.27	2.95	1.07	
	32	24	4.06	3.72	0.82	4.04	3.70	0.92	3.88	3.55	0.97	3.72	3.41	1.02	3.42	3.13	1.10	
H	20	14	3.13	2.61	0.69	3.11	2.60	0.77	2.99	2.49	0.82	2.87	2.39	0.85	2.64	2.21	0.92	
	23	16	3.32	2.84	0.72	3.30	2.82	0.81	3.17	2.71	0.86	3.04	2.60	0.89	2.80	2.40	0.97	
	26	18	3.45	3.00	0.74	3.43	2.98	0.84	3.29	2.86	0.88	3.16	2.75	0.92	2.91	2.53	1.00	
	27	19	3.52	3.08	0.74	3.50	3.06	0.84	3.36	2.94	0.89	3.23	2.82	0.92	2.97	2.60	1.00	
	30	22	3.73	3.31	0.77	3.71	3.29	0.86	3.56	3.16	0.91	3.42	3.03	0.95	3.15	2.79	1.03	
	32	24	3.90	3.52	0.79	3.88	3.50	0.89	3.72	3.36	0.94	3.57	3.22	0.98	3.29	2.97	1.06	
M	20	14	2.97	2.41	0.65	2.96	2.40	0.74	2.84	2.30	0.78	2.73	2.21	0.81	2.51	2.04	0.88	
	23	16	3.15	2.63	0.69	3.14	2.62	0.78	3.01	2.51	0.82	2.89	2.41	0.85	2.66	2.22	0.93	
	26	18	3.28	2.79	0.71	3.26	2.77	0.80	3.13	2.66	0.84	3.00	2.55	0.88	2.77	2.35	0.95	
	27	19	3.34	2.86	0.71	3.33	2.85	0.80	3.19	2.73	0.85	3.06	2.62	0.88	2.82	2.42	0.96	
	30	22	3.55	3.09	0.73	3.53	3.07	0.83	3.38	2.95	0.87	3.25	2.83	0.91	2.99	2.61	0.99	
	32	24	3.71	3.29	0.75	3.69	3.28	0.85	3.54	3.14	0.90	3.39	3.02	0.94	3.13	2.78	1.01	
L	20	14	2.74	2.16	0.64	2.72	2.15	0.72	2.61	2.06	0.76	2.51	1.98	0.79	2.31	1.82	0.86	
	23	16	2.90	2.37	0.67	2.89	2.35	0.76	2.77	2.26	0.80	2.66	2.17	0.83	2.45	2.00	0.90	
	26	18	3.02	2.51	0.69	3.00	2.50	0.78	2.88	2.40	0.82	2.76	2.30	0.86	2.55	2.12	0.93	
	27	19	3.08	2.58	0.69	3.06	2.57	0.78	2.94	2.46	0.83	2.82	2.37	0.86	2.60	2.18	0.93	
	30	22	3.26	2.79	0.71	3.24	2.78	0.80	3.11	2.66	0.85	2.99	2.56	0.89	2.75	2.36	0.96	
	32	24	3.41	2.99	0.73	3.39	2.97	0.83	3.25	2.85	0.88	3.12	2.73	0.91	2.88	2.52	0.99	

Heating

Fan speed	Outdoor air temperature		Indoor dry bulb temperature									
			16		18		20		22		24	
			TC	PI	TC	PI	TC	PI	TC	PI	TC	PI
	DB	WB	kW	kW	kW	kW	kW	kW	kW	kW	kW	kW
Turbo	-10	-11	2.90	0.88	2.75	0.91	2.62	0.94	2.51	0.97	2.42	1.00
	-5	-5.6	3.05	0.86	2.89	0.88	2.76	0.91	2.65	0.94	2.54	0.97
	0	-0.7	3.31	0.87	3.14	0.89	3.00	0.93	2.88	0.96	2.77	0.99
	7	6	4.42	0.94	4.19	0.97	4.00	1.00	3.84	1.03	3.69	1.07
	10	8	4.64	0.97	4.40	1.00	4.20	1.03	4.03	1.06	3.87	1.10
H	-10	-11	2.82	0.88	2.67	0.90	2.55	0.93	2.45	0.97	2.35	1.00
	-5	-5.6	2.97	0.85	2.81	0.88	2.69	0.91	2.57	0.94	2.48	0.97
	0	-0.7	3.22	0.87	3.06	0.89	2.92	0.92	2.80	0.95	2.69	0.98
	7	6	4.30	0.94	4.08	0.96	3.89	1.00	3.73	1.03	3.59	1.06
	10	8	4.51	0.96	4.28	0.99	4.09	1.02	3.92	1.06	3.77	1.09
M	-10	-11	2.73	0.89	2.59	0.92	2.47	0.95	2.37	0.98	2.28	1.01
	-5	-5.6	2.87	0.87	2.72	0.89	2.60	0.92	2.49	0.95	2.40	0.98
	0	-0.7	3.12	0.88	2.96	0.90	2.83	0.94	2.71	0.97	2.60	1.00
	7	6	4.16	0.95	3.94	0.98	3.77	1.01	3.61	1.04	3.47	1.08
	10	8	4.37	0.98	4.14	1.01	3.96	1.04	3.79	1.08	3.65	1.11
L	-10	-11	2.59	0.92	2.46	0.95	2.35	0.98	2.25	1.01	2.16	1.05
	-5	-5.6	2.73	0.89	2.59	0.92	2.47	0.95	2.37	0.98	2.28	1.01
	0	-0.7	2.96	0.91	2.81	0.93	2.68	0.96	2.57	1.00	2.47	1.03
	7	6	3.95	0.98	3.75	1.01	3.58	1.04	3.43	1.08	3.30	1.11
	10	8	4.15	1.01	3.94	1.04	3.76	1.07	3.60	1.11	3.46	1.15

ASC-18BI2

Cooling

Fan speed	Indoor air temperature		Outdoor dry bulb temperature														
			25			30			35			40			46		
			TC	SHC	PI	TC	SHC	PI	TC	SHC	PI	TC	SHC	PI	TC	SHC	PI
	DB	WB	kW	kW	kW	kW	kW	kW	kW	kW	kW	kW	kW	kW	kW	kW	kW
Turbo	20	14	4.66	3.19	1.14	4.64	3.17	1.28	4.45	3.05	1.35	4.27	2.92	1.41	3.92	2.68	1.53
	24	17	4.94	3.58	1.19	4.91	3.56	1.34	4.71	3.42	1.42	4.53	3.28	1.48	4.15	3.01	1.61
	26	18	5.14	3.85	1.23	5.11	3.83	1.38	4.90	3.68	1.46	4.71	3.53	1.52	4.32	3.24	1.65
	27	19	5.24	3.98	1.23	5.21	3.96	1.39	5.00	3.80	1.47	4.80	3.65	1.53	4.40	3.35	1.66
	30	22	5.55	4.36	1.27	5.52	4.34	1.43	5.30	4.16	1.51	5.09	3.99	1.58	4.67	3.66	1.71
	32	24	5.80	4.73	1.31	5.77	4.70	1.47	5.54	4.51	1.56	5.32	4.33	1.62	4.88	3.97	1.76
H	20	14	4.47	2.97	1.10	4.45	2.96	1.24	4.27	2.84	1.31	4.10	2.73	1.36	3.78	2.51	1.48
	23	16	4.74	3.35	1.15	4.72	3.34	1.30	4.52	3.20	1.37	4.34	3.07	1.43	4.00	2.83	1.55
	26	18	4.93	3.62	1.18	4.91	3.60	1.34	4.71	3.46	1.41	4.52	3.32	1.47	4.16	3.06	1.59
	27	19	5.03	3.75	1.19	5.00	3.73	1.34	4.80	3.58	1.42	4.61	3.43	1.48	4.25	3.16	1.60
	30	22	5.33	4.11	1.22	5.30	4.09	1.38	5.09	3.92	1.46	4.88	3.77	1.52	4.50	3.47	1.65
	32	24	5.57	4.47	1.26	5.54	4.45	1.42	5.32	4.27	1.50	5.10	4.10	1.57	4.71	3.78	1.70
M	20	14	4.25	2.74	1.05	4.23	2.73	1.18	4.06	2.62	1.25	3.89	2.51	1.30	3.59	2.32	1.41
	23	16	4.50	3.11	1.10	4.48	3.09	1.24	4.30	2.97	1.31	4.13	2.85	1.36	3.80	2.63	1.48
	26	18	4.68	3.37	1.13	4.66	3.35	1.28	4.47	3.21	1.35	4.29	3.09	1.40	3.96	2.84	1.52
	27	19	4.78	3.49	1.14	4.75	3.47	1.28	4.56	3.33	1.35	4.38	3.20	1.41	4.04	2.95	1.53
	30	22	5.07	3.84	1.17	5.04	3.82	1.32	4.83	3.66	1.39	4.64	3.52	1.45	4.28	3.24	1.58
	32	24	5.29	4.19	1.20	5.27	4.17	1.36	5.05	4.00	1.43	4.85	3.84	1.49	4.47	3.54	1.62
L	20	14	3.91	2.45	1.02	3.89	2.44	1.15	3.73	2.34	1.22	3.58	2.24	1.27	3.30	2.07	1.37
	23	16	4.14	2.79	1.07	4.12	2.78	1.21	3.95	2.66	1.28	3.80	2.56	1.33	3.50	2.36	1.44
	26	18	4.31	3.03	1.10	4.29	3.02	1.24	4.11	2.89	1.31	3.95	2.78	1.37	3.64	2.56	1.48
	27	19	4.40	3.14	1.11	4.37	3.13	1.25	4.20	3.00	1.32	4.03	2.88	1.37	3.71	2.66	1.49
	30	22	4.66	3.47	1.14	4.64	3.45	1.29	4.45	3.31	1.36	4.27	3.18	1.42	3.94	2.93	1.54
	32	24	4.87	3.80	1.17	4.84	3.78	1.32	4.65	3.63	1.40	4.46	3.48	1.46	4.11	3.21	1.58

Heating

Fan speed	Outdoor air temperature		Indoor dry bulb temperature									
			16		18		20		22		24	
			TC	PI	TC	PI	TC	PI	TC	PI	TC	PI
	DB	WB	kW	kW	kW	kW	kW	kW	kW	kW	kW	kW
Turbo	-10	-11	4.05	1.41	3.84	1.45	3.67	1.50	3.52	1.55	3.38	1.61
	-5	-5.6	4.27	1.37	4.05	1.41	3.86	1.46	3.70	1.51	3.56	1.56
	0	-0.7	4.64	1.39	4.40	1.43	4.20	1.48	4.03	1.53	3.87	1.58
	7	6	6.19	1.50	5.86	1.55	5.60	1.60	5.37	1.65	5.16	1.71
	10	8	6.49	1.55	6.16	1.59	5.88	1.65	5.64	1.70	5.42	1.76
H	-10	-11	3.95	1.41	3.74	1.45	3.57	1.50	3.42	1.55	3.29	1.60
	-5	-5.6	4.15	1.36	3.94	1.40	3.76	1.45	3.60	1.50	3.47	1.55
	0	-0.7	4.51	1.39	4.28	1.42	4.09	1.47	3.92	1.52	3.77	1.57
	7	6	6.02	1.50	5.71	1.54	5.45	1.59	5.22	1.65	5.02	1.70
	10	8	6.32	1.54	5.99	1.58	5.72	1.64	5.49	1.69	5.27	1.75

Fan speed	Outdoor air temperature		Indoor dry bulb temperature									
			16		18		20		22		24	
			TC	PI	TC	PI	TC	PI	TC	PI	TC	PI
	DB	WB	kW	kW	kW	kW	kW	kW	kW	kW	kW	kW
M	-10	-11	3.82	1.43	3.62	1.47	3.46	1.52	3.31	1.57	3.19	1.62
	-5	-5.6	4.02	1.39	3.81	1.42	3.64	1.47	3.49	1.52	3.36	1.57
	0	-0.7	4.37	1.41	4.14	1.45	3.96	1.50	3.79	1.55	3.65	1.60
	7	6	5.83	1.52	5.52	1.56	5.27	1.62	5.06	1.67	4.86	1.73
	10	8	6.12	1.56	5.80	1.61	5.54	1.66	5.31	1.72	5.11	1.78
L	-10	-11	3.63	1.47	3.44	1.51	3.28	1.57	3.15	1.62	3.03	1.67
	-5	-5.6	3.82	1.43	3.62	1.47	3.46	1.52	3.31	1.57	3.19	1.62
	0	-0.7	4.15	1.45	3.94	1.49	3.76	1.54	3.60	1.59	3.46	1.65
	7	6	5.53	1.57	5.25	1.61	5.01	1.67	4.80	1.72	4.62	1.78
	10	8	5.81	1.61	5.51	1.66	5.26	1.72	5.04	1.77	4.85	1.83

ASC-24BI2
Cooling

Fan speed	Indoor air temperature		Outdoor dry bulb temperature													
			25			30			35			40			46		
			TC	SHC	PI	TC	SHC	PI	TC	SHC	PI	TC	SHC	PI	TC	SHC	PI
	DB	WB	kW	kW	kW	kW	kW	kW	kW	kW	kW	kW	kW	kW	kW	kW	kW
Turbo	20	14	6.62	5.07	1.57	6.58	5.05	1.77	6.31	4.84	1.87	6.06	4.65	1.95	5.56	4.27	2.11
	24	17	7.01	5.59	1.65	6.98	5.56	1.86	6.69	5.33	1.96	6.43	5.12	2.04	5.90	4.70	2.22
	26	18	7.29	5.95	1.69	7.26	5.92	1.91	6.96	5.68	2.02	6.68	5.45	2.10	6.13	5.00	2.28
	27	19	7.44	6.12	1.70	7.40	6.09	1.92	7.10	5.84	2.03	6.82	5.61	2.11	6.25	5.14	2.29
	30	22	7.89	6.63	1.75	7.84	6.60	1.98	7.53	6.33	2.09	7.23	6.08	2.18	6.63	5.58	2.36
	32	24	8.24	7.11	1.80	8.20	7.07	2.04	7.86	6.79	2.15	7.55	6.52	2.24	6.93	5.98	2.43
H	20	14	6.35	4.73	1.51	6.32	4.71	1.71	6.06	4.52	1.80	5.82	4.34	1.88	5.36	4.00	2.04
	23	16	6.73	5.24	1.59	6.70	5.21	1.79	6.43	5.00	1.89	6.17	4.80	1.97	5.69	4.42	2.14
	26	18	7.00	5.59	1.63	6.97	5.56	1.84	6.68	5.33	1.95	6.42	5.12	2.03	5.91	4.72	2.20
	27	19	7.14	5.76	1.64	7.10	5.73	1.85	6.82	5.49	1.96	6.54	5.27	2.04	6.03	4.86	2.21
	30	22	7.57	6.26	1.69	7.53	6.22	1.91	7.22	5.97	2.02	6.94	5.73	2.10	6.39	5.28	2.28
	32	24	7.91	6.73	1.74	7.87	6.69	1.96	7.55	6.42	2.08	7.25	6.16	2.16	6.68	5.68	2.35
M	20	14	6.03	4.37	1.44	6.00	4.35	1.63	5.76	4.17	1.72	5.53	4.00	1.79	5.10	3.69	1.95
	23	16	6.40	4.86	1.52	6.36	4.83	1.71	6.10	4.63	1.81	5.86	4.45	1.88	5.40	4.10	2.04
	26	18	6.65	5.20	1.56	6.62	5.17	1.76	6.35	4.96	1.86	6.09	4.76	1.94	5.62	4.39	2.10
	27	19	6.79	5.36	1.57	6.75	5.33	1.77	6.48	5.12	1.87	6.22	4.91	1.95	5.73	4.53	2.11
	30	22	7.19	5.84	1.61	7.15	5.81	1.82	6.86	5.57	1.92	6.59	5.35	2.00	6.07	4.93	2.18
	32	24	7.52	6.30	1.66	7.48	6.26	1.88	7.17	6.01	1.98	6.89	5.77	2.06	6.35	5.32	2.24
L	20	14	5.55	3.91	1.41	5.52	3.88	1.59	5.30	3.73	1.68	5.09	3.58	1.75	4.69	3.30	1.90
	23	16	5.88	4.36	1.48	5.85	4.34	1.67	5.62	4.16	1.76	5.39	3.99	1.84	4.97	3.68	1.99
	26	18	6.12	4.68	1.52	6.09	4.66	1.72	5.84	4.47	1.81	5.61	4.29	1.89	5.17	3.95	2.05
	27	19	6.24	4.83	1.53	6.21	4.81	1.73	5.96	4.61	1.82	5.72	4.43	1.90	5.27	4.08	2.06
	30	22	6.62	5.28	1.57	6.58	5.25	1.78	6.31	5.04	1.88	6.06	4.84	1.95	5.59	4.46	2.12
	32	24	6.91	5.71	1.62	6.88	5.68	1.83	6.60	5.45	1.93	6.34	5.23	2.01	5.84	4.82	2.18

Heating

Fan speed	Outdoor air temperature		Indoor dry bulb temperature									
			16		18		20		22		24	
			TC	PI	TC	PI	TC	PI	TC	PI	TC	PI
	DB	WB	kW	kW	kW	kW	kW	kW	kW	kW	kW	kW
Turbo	-10	-11	5.65	1.77	5.35	1.82	5.11	1.88	4.90	1.94	4.71	2.01
	-5	-5.6	5.94	1.71	5.64	1.76	5.38	1.82	5.16	1.89	4.96	1.95
	0	-0.7	6.46	1.74	6.13	1.79	5.85	1.85	5.61	1.91	5.39	1.98
	7	6	8.62	1.88	8.17	1.93	7.80	2.00	7.48	2.07	7.19	2.14
	10	8	9.05	1.94	8.58	1.99	8.19	2.06	7.85	2.13	7.55	2.20
H	-10	-11	5.50	1.76	5.21	1.81	4.97	1.87	4.77	1.93	4.59	2.00
	-5	-5.6	5.78	1.71	5.48	1.75	5.24	1.82	5.02	1.88	4.83	1.94
	0	-0.7	6.29	1.73	5.96	1.78	5.69	1.84	5.46	1.90	5.25	1.97
	7	6	8.38	1.87	7.95	1.92	7.59	1.99	7.28	2.06	7.00	2.13
	10	8	8.80	1.93	8.34	1.98	7.97	2.05	7.64	2.12	7.35	2.19
M	-10	-11	5.32	1.78	5.04	1.83	4.82	1.90	4.62	1.96	4.44	2.03
	-5	-5.6	5.60	1.73	5.31	1.78	5.07	1.84	4.86	1.90	4.67	1.97
	0	-0.7	6.09	1.76	5.77	1.81	5.51	1.87	5.28	1.93	5.08	2.00
	7	6	8.11	1.90	7.69	1.95	7.35	2.02	7.04	2.09	6.77	2.16
	10	8	8.52	1.96	8.08	2.01	7.71	2.08	7.40	2.15	7.11	2.22
L	-10	-11	5.05	1.84	4.79	1.89	4.57	1.96	4.39	2.02	4.22	2.09
	-5	-5.6	5.32	1.79	5.04	1.84	4.82	1.90	4.62	1.96	4.44	2.03
	0	-0.7	5.78	1.81	5.48	1.86	5.23	1.93	5.02	1.99	4.83	2.06
	7	6	7.71	1.96	7.31	2.01	6.98	2.08	6.69	2.15	6.43	2.23
	10	8	8.09	2.02	7.67	2.07	7.33	2.15	7.03	2.22	6.76	2.29

ASC-30BI2
Cooling

Fan speed	Indoor air temperature		Outdoor dry bulb temperature														
			25			30			35			40			46		
			TC	SHC	PI	TC	SHC	PI	TC	SHC	PI	TC	SHC	PI	TC	SHC	PI
	DB	WB	kW	kW	kW	kW	kW	kW	kW	kW	kW	kW	kW	kW	kW	kW	kW
Turbo	20	14	7.92	5.40	1.93	7.88	5.37	2.18	7.56	5.15	2.30	7.26	4.95	2.40	6.66	4.54	2.60
	24	17	8.40	6.06	2.03	8.35	6.03	2.29	8.01	5.79	2.42	7.69	5.55	2.52	7.06	5.10	2.73
	26	18	8.73	6.53	2.09	8.69	6.50	2.35	8.33	6.23	2.49	8.00	5.98	2.59	7.34	5.49	2.81
	27	19	8.91	6.75	2.10	8.86	6.71	2.37	8.50	6.44	2.50	8.16	6.18	2.60	7.49	5.67	2.83
	30	22	9.44	7.39	2.16	9.39	7.35	2.44	9.01	7.05	2.57	8.65	6.77	2.68	7.94	6.21	2.91
	32	24	9.87	8.02	2.22	9.81	7.98	2.51	9.42	7.65	2.65	9.04	7.35	2.76	8.29	6.74	2.99
H	20	14	7.60	5.03	1.86	7.56	5.01	2.10	7.26	4.80	2.22	6.97	4.61	2.31	6.42	4.25	2.51
	23	16	8.06	5.68	1.95	8.02	5.65	2.21	7.69	5.42	2.33	7.39	5.20	2.43	6.81	4.80	2.63
	26	18	8.38	6.14	2.01	8.34	6.10	2.27	8.00	5.86	2.40	7.68	5.62	2.50	7.08	5.18	2.71
	27	19	8.55	6.35	2.02	8.51	6.32	2.28	8.16	6.06	2.41	7.83	5.82	2.51	7.22	5.36	2.73
	30	22	9.06	6.97	2.08	9.02	6.94	2.35	8.65	6.65	2.48	8.30	6.39	2.59	7.65	5.89	2.81
	32	24	9.47	7.59	2.14	9.42	7.55	2.42	9.04	7.24	2.56	8.68	6.95	2.66	8.00	6.41	2.89

Fan speed	Indoor air temperature		Outdoor dry bulb temperature														
			25			30			35			40			46		
			TC	SHC	PI	TC	SHC	PI	TC	SHC	PI	TC	SHC	PI	TC	SHC	PI
	DB	WB	kW	kW	kW	kW	kW	kW	kW	kW	kW	kW	kW	kW	kW	kW	kW
M	20	14	7.22	4.64	1.78	7.19	4.62	2.01	6.89	4.43	2.12	6.62	4.25	2.21	6.10	3.92	2.40
	23	16	7.66	5.27	1.87	7.62	5.24	2.11	7.31	5.02	2.23	7.02	4.82	2.32	6.47	4.45	2.52
	26	18	7.96	5.71	1.92	7.92	5.68	2.17	7.60	5.45	2.29	7.30	5.23	2.39	6.73	4.82	2.59
	27	19	8.12	5.91	1.93	8.08	5.88	2.18	7.75	5.64	2.30	7.44	5.42	2.40	6.86	4.99	2.60
	30	22	8.61	6.51	1.99	8.57	6.47	2.24	8.22	6.21	2.37	7.89	5.96	2.47	7.27	5.50	2.68
	32	24	9.00	7.11	2.05	8.95	7.07	2.31	8.59	6.78	2.44	8.24	6.51	2.54	7.60	6.00	2.76
L	20	14	6.65	4.14	1.73	6.61	4.12	1.96	6.34	3.95	2.07	6.09	3.80	2.15	5.61	3.50	2.34
	23	16	7.05	4.73	1.82	7.01	4.70	2.05	6.72	4.51	2.17	6.45	4.33	2.26	5.95	3.99	2.45
	26	18	7.33	5.14	1.87	7.29	5.11	2.11	6.99	4.90	2.23	6.71	4.71	2.33	6.19	4.34	2.52
	27	19	7.47	5.33	1.88	7.43	5.30	2.12	7.13	5.09	2.24	6.85	4.88	2.34	6.31	4.50	2.54
	30	22	7.92	5.88	1.94	7.88	5.85	2.19	7.56	5.62	2.31	7.26	5.39	2.41	6.69	4.97	2.61
	32	24	8.28	6.45	1.99	8.23	6.41	2.25	7.90	6.15	2.38	7.58	5.90	2.48	6.99	5.44	2.69

Heating

Fan speed	Outdoor air temperature		Indoor dry bulb temperature									
			16		18		20		22		24	
			TC	PI	TC	PI	TC	PI	TC	PI	TC	PI
	DB	WB	kW	kW	kW	kW	kW	kW	kW	kW	kW	kW
Turbo	-10	-11	6.37	1.99	6.04	2.04	5.77	2.11	5.53	2.18	5.32	2.26
	-5	-5.6	6.71	1.93	6.36	1.98	6.07	2.05	5.82	2.12	5.60	2.19
	0	-0.7	7.29	1.96	6.91	2.01	6.60	2.08	6.33	2.15	6.08	2.23
	7	6	9.72	2.11	9.21	2.17	8.80	2.25	8.44	2.33	8.11	2.40
	10	8	10.21	2.18	9.68	2.24	9.24	2.32	8.86	2.40	8.52	2.48
H	-10	-11	6.20	1.98	5.88	2.03	5.61	2.10	5.38	2.17	5.17	2.25
	-5	-5.6	6.53	1.92	6.19	1.97	5.91	2.04	5.66	2.11	5.45	2.18
	0	-0.7	7.09	1.95	6.72	2.00	6.42	2.07	6.16	2.14	5.92	2.21
	7	6	9.46	2.10	8.97	2.16	8.56	2.24	8.21	2.31	7.89	2.39
	10	8	9.93	2.17	9.41	2.23	8.99	2.31	8.62	2.38	8.29	2.46
M	-10	-11	6.00	2.01	5.69	2.06	5.43	2.14	5.21	2.21	5.01	2.28
	-5	-5.6	6.32	1.95	5.99	2.00	5.72	2.07	5.48	2.14	5.27	2.21
	0	-0.7	6.87	1.98	6.51	2.03	6.22	2.10	5.96	2.17	5.73	2.25
	7	6	9.16	2.14	8.68	2.20	8.29	2.27	7.95	2.35	7.64	2.43
	10	8	9.61	2.20	9.11	2.26	8.70	2.34	8.34	2.42	8.02	2.50
L	-10	-11	5.70	2.07	5.40	2.13	5.16	2.20	4.95	2.28	4.76	2.35
	-5	-5.6	6.00	2.01	5.69	2.07	5.43	2.14	5.21	2.21	5.01	2.28
	0	-0.7	6.52	2.04	6.18	2.10	5.91	2.17	5.66	2.24	5.44	2.32
	7	6	8.70	2.20	8.25	2.26	7.87	2.34	7.55	2.42	7.26	2.50
	10	8	9.13	2.27	8.66	2.33	8.27	2.41	7.93	2.49	7.62	2.58

ASC-36BI2

Cooling

Fan speed	Indoor air temperature		Outdoor dry bulb temperature														
			25			30			35			40			46		
			TC	SHC	PI	TC	SHC	PI	TC	SHC	PI	TC	SHC	PI	TC	SHC	PI
	DB	WB	kW	kW	kW	kW	kW	kW	kW	kW	kW	kW	kW	kW	kW	kW	kW
Turbo	20	14	9.79	7.66	2.39	9.73	7.62	2.70	9.34	7.31	2.86	8.96	7.01	2.98	8.23	6.44	3.23
	24	17	10.37	8.40	2.51	10.32	8.36	2.84	9.90	8.02	3.00	9.50	7.70	3.12	8.72	7.06	3.39
	26	18	10.79	8.93	2.59	10.73	8.88	2.92	10.29	8.52	3.08	9.88	8.18	3.21	9.07	7.50	3.49
	27	19	11.00	9.18	2.60	10.94	9.13	2.93	10.50	8.76	3.10	10.08	8.41	3.23	9.25	7.72	3.50
	30	22	11.66	9.93	2.68	11.60	9.88	3.02	11.13	9.48	3.19	10.69	9.10	3.32	9.80	8.35	3.61
	32	24	12.19	10.63	2.75	12.12	10.57	3.11	11.63	10.14	3.29	11.17	9.74	3.42	10.25	8.93	3.71
H	20	14	9.39	7.14	2.31	9.34	7.11	2.61	8.96	6.82	2.76	8.61	6.55	2.87	7.93	6.03	3.11
	23	16	9.96	7.87	2.42	9.90	7.83	2.74	9.50	7.51	2.89	9.12	7.21	3.01	8.41	6.65	3.27
	26	18	10.36	8.39	2.49	10.30	8.35	2.82	9.88	8.01	2.98	9.49	7.69	3.10	8.74	7.09	3.36
	27	19	10.56	8.64	2.51	10.51	8.59	2.83	10.08	8.24	2.99	9.68	7.91	3.12	8.92	7.29	3.38
	30	22	11.20	9.37	2.58	11.14	9.32	2.91	10.68	8.94	3.08	10.26	8.58	3.21	9.46	7.91	3.48
	32	24	11.70	10.05	2.66	11.64	10.00	3.00	11.17	9.59	3.17	10.72	9.21	3.30	9.88	8.49	3.58
M	20	14	8.92	6.60	2.21	8.88	6.56	2.49	8.52	6.29	2.63	8.18	6.04	2.74	7.54	5.57	2.97
	23	16	9.46	7.30	2.31	9.41	7.26	2.61	9.03	6.97	2.76	8.67	6.69	2.87	7.99	6.17	3.12
	26	18	9.84	7.80	2.38	9.79	7.76	2.69	9.39	7.45	2.84	9.01	7.15	2.96	8.31	6.59	3.21
	27	19	10.03	8.04	2.39	9.98	8.00	2.70	9.58	7.67	2.86	9.19	7.37	2.97	8.47	6.79	3.23
	30	22	10.64	8.74	2.46	10.58	8.70	2.78	10.15	8.34	2.94	9.75	8.01	3.06	8.98	7.38	3.32
	32	24	11.12	9.41	2.54	11.06	9.36	2.86	10.61	8.98	3.03	10.18	8.62	3.15	9.39	7.95	3.42
L	20	14	8.21	5.89	2.15	8.17	5.86	2.43	7.83	5.63	2.57	7.52	5.40	2.67	6.93	4.98	2.90
	23	16	8.70	6.56	2.26	8.66	6.52	2.55	8.30	6.26	2.69	7.97	6.01	2.80	7.35	5.54	3.04
	26	18	9.05	7.03	2.32	9.00	6.99	2.62	8.64	6.71	2.77	8.29	6.44	2.89	7.64	5.94	3.13
	27	19	9.23	7.25	2.33	9.18	7.21	2.63	8.81	6.92	2.78	8.46	6.64	2.90	7.80	6.12	3.15
	30	22	9.79	7.90	2.40	9.73	7.86	2.71	9.34	7.54	2.87	8.97	7.24	2.98	8.26	6.67	3.24
	32	24	10.23	8.53	2.47	10.17	8.49	2.79	9.76	8.14	2.95	9.37	7.82	3.07	8.64	7.20	3.33

Heating

Fan speed	Outdoor air temperature		Indoor dry bulb temperature									
			16		18		20		22		24	
			TC	PI	TC	PI	TC	PI	TC	PI	TC	PI
	DB	WB	kW	kW	kW	kW	kW	kW	kW	kW	kW	kW
Turbo	-10	-11	8.33	2.65	7.89	2.72	7.54	2.82	7.23	2.91	6.95	3.01
	-5	-5.6	8.76	2.57	8.31	2.64	7.94	2.74	7.61	2.83	7.32	2.92
	0	-0.7	9.53	2.61	9.03	2.68	8.63	2.78	8.27	2.87	7.95	2.97
	7	6	12.70	2.82	12.04	2.90	11.50	3.00	11.03	3.10	10.60	3.20
	10	8	13.34	2.90	12.64	2.99	12.08	3.09	11.58	3.19	11.13	3.30
H	-10	-11	8.10	2.64	7.68	2.71	7.33	2.80	7.03	2.90	6.76	3.00
	-5	-5.6	8.53	2.56	8.08	2.63	7.72	2.72	7.40	2.81	7.12	2.91
	0	-0.7	9.27	2.60	8.79	2.67	8.39	2.76	8.05	2.86	7.74	2.95
	7	6	12.36	2.81	11.72	2.88	11.19	2.99	10.73	3.09	10.32	3.19
	10	8	12.98	2.89	12.30	2.97	11.75	3.07	11.26	3.18	10.83	3.28

Fan speed	Outdoor air temperature		Indoor dry bulb temperature									
			16		18		20		22		24	
			TC	PI	TC	PI	TC	PI	TC	PI	TC	PI
	DB	WB	kW	kW	kW	kW	kW	kW	kW	kW	kW	kW
M	-10	-11	7.84	2.68	7.43	2.75	7.10	2.85	6.81	2.94	6.55	3.04
	-5	-5.6	8.26	2.60	7.83	2.67	7.47	2.76	7.17	2.86	6.89	2.95
	0	-0.7	8.97	2.64	8.51	2.71	8.12	2.81	7.79	2.90	7.49	3.00
	7	6	11.96	2.85	11.34	2.93	10.83	3.03	10.38	3.13	9.99	3.24
	10	8	12.56	2.93	11.91	3.02	11.37	3.12	10.90	3.23	10.48	3.33
L	-10	-11	7.45	2.76	7.06	2.84	6.75	2.94	6.47	3.03	6.22	3.14
	-5	-5.6	7.84	2.68	7.43	2.75	7.10	2.85	6.81	2.95	6.55	3.04
	0	-0.7	8.52	2.72	8.08	2.80	7.72	2.89	7.40	2.99	7.11	3.09
	7	6	11.37	2.94	10.77	3.02	10.29	3.13	9.87	3.23	9.49	3.34
	10	8	11.93	3.03	11.31	3.11	10.80	3.22	10.36	3.33	9.96	3.44

ASC-42BI2
Cooling

Fan speed	Indoor air temperature		Outdoor dry bulb temperature														
			25			30			35			40			46		
			TC	SHC	PI	TC	SHC	PI	TC	SHC	PI	TC	SHC	PI	TC	SHC	PI
	DB	WB	kW	kW	kW	kW	kW	kW	kW	kW	kW	kW	kW	kW	kW	kW	kW
Turbo	20	14	11.28	7.41	3.01	11.22	7.37	3.40	10.76	7.07	3.59	10.33	6.79	3.74	9.48	6.23	4.06
	24	17	11.95	8.37	3.16	11.89	8.33	3.57	11.41	7.99	3.77	10.95	7.67	3.93	10.05	7.04	4.26
	26	18	12.43	9.05	3.25	12.37	9.01	3.67	11.86	8.64	3.88	11.39	8.29	4.04	10.45	7.61	4.39
	27	19	12.68	9.37	3.27	12.61	9.32	3.69	12.10	8.94	3.90	11.62	8.58	4.06	10.66	7.87	4.41
	30	22	13.44	10.29	3.37	13.37	10.24	3.80	12.83	9.82	4.01	12.31	9.43	4.18	11.30	8.65	4.54
	32	24	14.05	11.21	3.46	13.97	11.15	3.91	13.40	10.70	4.13	12.87	10.27	4.30	11.81	9.43	4.67
H	20	14	10.83	6.90	2.91	10.77	6.87	3.28	10.33	6.59	3.47	9.92	6.32	3.61	9.14	5.83	3.92
	23	16	11.47	7.84	3.05	11.41	7.80	3.44	10.95	7.48	3.64	10.51	7.19	3.79	9.69	6.62	4.11
	26	18	11.93	8.51	3.14	11.87	8.46	3.54	11.39	8.12	3.74	10.93	7.79	3.90	10.08	7.18	4.23
	27	19	12.17	8.81	3.15	12.11	8.77	3.56	11.62	8.41	3.76	11.15	8.07	3.92	10.28	7.44	4.25
	30	22	12.90	9.71	3.25	12.83	9.66	3.67	12.31	9.27	3.87	11.82	8.90	4.03	10.90	8.20	4.38
	32	24	13.48	10.61	3.34	13.41	10.56	3.77	12.87	10.13	3.99	12.35	9.72	4.15	11.39	8.96	4.51
M	20	14	10.28	6.36	2.78	10.23	6.33	3.13	9.81	6.07	3.31	9.42	5.83	3.45	8.68	5.37	3.74
	23	16	10.90	7.27	2.91	10.84	7.23	3.29	10.40	6.94	3.47	9.99	6.66	3.62	9.21	6.14	3.92
	26	18	11.34	7.91	3.00	11.28	7.87	3.38	10.82	7.55	3.57	10.39	7.25	3.72	9.57	6.68	4.04
	27	19	11.56	8.21	3.01	11.50	8.16	3.40	11.04	7.83	3.59	10.59	7.52	3.74	9.77	6.93	4.06
	30	22	12.26	9.07	3.10	12.19	9.02	3.50	11.70	8.65	3.70	11.23	8.31	3.85	10.35	7.66	4.18
	32	24	12.81	9.94	3.19	12.74	9.89	3.60	12.22	9.48	3.81	11.74	9.10	3.97	10.82	8.39	4.30
L	20	14	9.46	5.68	2.71	9.41	5.65	3.05	9.03	5.42	3.23	8.67	5.20	3.36	7.99	4.79	3.65
	23	16	10.03	6.53	2.84	9.98	6.49	3.20	9.57	6.23	3.39	9.19	5.98	3.53	8.47	5.51	3.83
	26	18	10.43	7.12	2.92	10.38	7.09	3.30	9.95	6.80	3.48	9.56	6.53	3.63	8.81	6.02	3.94
	27	19	10.64	7.40	2.94	10.58	7.36	3.31	10.15	7.06	3.50	9.75	6.78	3.65	8.98	6.25	3.96
	30	22	11.28	8.20	3.02	11.22	8.16	3.41	10.76	7.82	3.61	10.33	7.51	3.76	9.52	6.92	4.07
	32	24	11.78	9.01	3.11	11.72	8.97	3.51	11.25	8.60	3.71	10.80	8.26	3.87	9.95	7.61	4.19

Heating

Fan speed	Outdoor air temperature		Indoor dry bulb temperature									
			16		18		20		22		24	
			TC	PI	TC	PI	TC	PI	TC	PI	TC	PI
	DB	WB	kW	kW	kW	kW	kW	kW	kW	kW	kW	kW
Turbo	-10	-11	9.77	3.53	9.27	3.63	8.85	3.76	8.48	3.88	8.16	4.01
	-5	-5.6	10.29	3.43	9.75	3.53	9.32	3.65	8.93	3.77	8.59	3.90
	0	-0.7	11.18	3.48	10.60	3.58	10.13	3.70	9.71	3.83	9.33	3.96
	7	6	14.91	3.76	14.14	3.86	13.50	4.00	12.94	4.13	12.45	4.27
	10	8	15.66	3.87	14.84	3.98	14.18	4.12	13.59	4.26	13.07	4.40
H	-10	-11	9.51	3.51	9.02	3.61	8.61	3.74	8.26	3.87	7.94	3.99
	-5	-5.6	10.01	3.41	9.49	3.51	9.06	3.63	8.69	3.75	8.36	3.88
	0	-0.7	10.88	3.46	10.32	3.56	9.85	3.69	9.45	3.81	9.08	3.94
	7	6	14.51	3.74	13.75	3.85	13.14	3.98	12.59	4.11	12.11	4.25
	10	8	15.23	3.85	14.44	3.96	13.79	4.10	13.22	4.24	12.72	4.38
M	-10	-11	9.21	3.57	8.73	3.67	8.33	3.80	7.99	3.92	7.68	4.05
	-5	-5.6	9.69	3.46	9.19	3.56	8.77	3.69	8.41	3.81	8.09	3.94
	0	-0.7	10.53	3.52	9.99	3.61	9.54	3.74	9.14	3.87	8.79	4.00
	7	6	14.04	3.80	13.31	3.90	12.72	4.04	12.19	4.18	11.72	4.32
	10	8	14.75	3.91	13.98	4.02	13.35	4.16	12.80	4.30	12.31	4.44
L	-10	-11	8.75	3.68	8.29	3.78	7.92	3.92	7.59	4.05	7.30	4.18
	-5	-5.6	9.21	3.57	8.73	3.67	8.33	3.80	7.99	3.93	7.68	4.06
	0	-0.7	10.01	3.63	9.49	3.73	9.06	3.86	8.69	3.99	8.35	4.12
	7	6	13.34	3.92	12.65	4.03	12.08	4.17	11.58	4.31	11.14	4.45
	10	8	14.01	4.03	13.28	4.15	12.68	4.29	12.16	4.44	11.69	4.58

ASC-48BI2
Cooling

Fan speed	Indoor air temperature		Outdoor dry bulb temperature														
			25			30			35			40			46		
			TC	SHC	PI	TC	SHC	PI	TC	SHC	PI	TC	SHC	PI	TC	SHC	PI
	DB	WB	kW	kW	kW	kW	kW	kW	kW	kW	kW	kW	kW	kW	kW	kW	kW
Turbo	20	14	12.49	8.68	3.55	12.42	8.64	4.01	11.92	8.29	4.24	11.44	7.95	4.41	10.50	7.30	4.79
	24	17	13.24	9.71	3.73	13.17	9.66	4.21	12.63	9.27	4.45	12.13	8.90	4.63	11.13	8.17	5.02
	26	18	13.77	10.44	3.84	13.69	10.39	4.33	13.14	9.97	4.58	12.61	9.57	4.77	11.57	8.78	5.17
	27	19	14.04	10.78	3.86	13.97	10.73	4.35	13.40	10.29	4.60	12.86	9.88	4.79	11.80	9.06	5.20
	30	22	14.88	11.79	3.97	14.81	11.73	4.48	14.20	11.25	4.74	13.64	10.80	4.93	12.51	9.91	5.35
	32	24	15.55	12.77	4.09	15.47	12.70	4.61	14.84	12.18	4.87	14.25	11.70	5.08	13.07	10.73	5.51
H	20	14	11.99	8.09	3.43	11.93	8.05	3.87	11.44	7.72	4.09	10.98	7.41	4.26	10.12	6.83	4.62
	23	16	12.71	9.10	3.60	12.64	9.05	4.06	12.13	8.69	4.29	11.64	8.34	4.47	10.73	7.69	4.85
	26	18	13.22	9.81	3.70	13.15	9.76	4.18	12.61	9.36	4.42	12.11	8.99	4.60	11.16	8.29	4.99
	27	19	13.48	10.14	3.72	13.41	10.09	4.20	12.86	9.68	4.44	12.35	9.29	4.62	11.38	8.57	5.02
	30	22	14.29	11.12	3.83	14.21	11.06	4.32	13.64	10.61	4.57	13.09	10.19	4.76	12.07	9.39	5.16
	32	24	14.93	12.08	3.94	14.85	12.02	4.45	14.25	11.53	4.70	13.68	11.07	4.90	12.61	10.20	5.31

Fan speed	Indoor air temperature		Outdoor dry bulb temperature														
			25			30			35			40			46		
			TC	SHC	PI	TC	SHC	PI	TC	SHC	PI	TC	SHC	PI	TC	SHC	PI
	DB	WB	kW	kW	kW	kW	kW	kW	kW	kW	kW	kW	kW	kW	kW	kW	kW
M	20	14	11.39	7.46	3.27	11.33	7.42	3.70	10.87	7.12	3.90	10.43	6.84	4.07	9.62	6.30	4.41
	23	16	12.07	8.44	3.43	12.01	8.39	3.88	11.52	8.05	4.10	11.06	7.73	4.27	10.19	7.13	4.63
	26	18	12.56	9.13	3.53	12.49	9.08	3.99	11.98	8.71	4.22	11.50	8.36	4.39	10.60	7.71	4.76
	27	19	12.81	9.44	3.55	12.74	9.39	4.01	12.22	9.01	4.24	11.73	8.65	4.41	10.81	7.98	4.79
	30	22	13.57	10.38	3.66	13.50	10.33	4.13	12.95	9.91	4.36	12.44	9.51	4.54	11.46	8.77	4.93
	32	24	14.19	11.31	3.76	14.11	11.25	4.25	13.54	10.79	4.49	13.00	10.36	4.68	11.98	9.55	5.07
L	20	14	10.48	6.66	3.19	10.42	6.63	3.60	10.00	6.36	3.81	9.60	6.10	3.96	8.85	5.63	4.30
	23	16	11.11	7.57	3.35	11.05	7.53	3.78	10.60	7.23	3.99	10.18	6.94	4.16	9.38	6.40	4.51
	26	18	11.55	8.22	3.45	11.49	8.18	3.89	11.02	7.84	4.11	10.58	7.53	4.28	9.75	6.94	4.64
	27	19	11.78	8.52	3.46	11.72	8.47	3.91	11.24	8.13	4.13	10.79	7.80	4.30	9.95	7.19	4.67
	30	22	12.49	9.39	3.56	12.42	9.34	4.02	11.92	8.96	4.25	11.44	8.60	4.43	10.55	7.93	4.81
	32	24	13.05	10.26	3.67	12.98	10.20	4.14	12.45	9.79	4.38	11.96	9.40	4.56	11.02	8.66	4.95

Heating

Fan speed	Outdoor air temperature		Indoor dry bulb temperature									
			16		18		20		22		24	
			TC	PI	TC	PI	TC	PI	TC	PI	TC	PI
	DB	WB	kW	kW	kW	kW	kW	kW	kW	kW	kW	kW
Turbo	-10	-11	11.22	4.15	10.64	4.27	10.16	4.42	9.74	4.56	9.37	4.72
	-5	-5.6	11.81	4.03	11.20	4.14	10.70	4.29	10.25	4.43	9.86	4.58
	0	-0.7	12.84	4.09	12.17	4.20	11.63	4.35	11.15	4.50	10.72	4.65
	7	6	17.12	4.42	16.23	4.54	15.50	4.70	14.86	4.86	14.29	5.02
	10	8	17.98	4.55	17.04	4.68	16.28	4.84	15.60	5.00	15.00	5.17
H	-10	-11	10.92	4.13	10.35	4.25	9.89	4.39	9.48	4.54	9.11	4.69
	-5	-5.6	11.49	4.01	10.90	4.12	10.41	4.27	9.98	4.41	9.59	4.56
	0	-0.7	12.49	4.07	11.84	4.18	11.31	4.33	10.84	4.48	10.43	4.63
	7	6	16.66	4.40	15.79	4.52	15.08	4.68	14.46	4.83	13.90	5.00
	10	8	17.49	4.53	16.58	4.65	15.84	4.82	15.18	4.98	14.60	5.15
M	-10	-11	10.57	4.19	10.02	4.31	9.57	4.46	9.18	4.61	8.82	4.76
	-5	-5.6	11.13	4.07	10.55	4.18	10.07	4.33	9.66	4.48	9.29	4.63
	0	-0.7	12.09	4.13	11.47	4.25	10.95	4.40	10.50	4.54	10.09	4.69
	7	6	16.13	4.46	15.29	4.59	14.60	4.75	14.00	4.91	13.46	5.07
	10	8	16.93	4.60	16.05	4.72	15.33	4.89	14.70	5.05	14.13	5.22
L	-10	-11	10.04	4.32	9.52	4.44	9.09	4.60	8.72	4.75	8.38	4.91
	-5	-5.6	10.57	4.20	10.02	4.32	9.57	4.47	9.18	4.62	8.82	4.77
	0	-0.7	11.49	4.26	10.89	4.38	10.40	4.53	9.97	4.69	9.59	4.84
	7	6	15.32	4.60	14.52	4.73	13.87	4.90	13.30	5.06	12.79	5.23
	10	8	16.09	4.74	15.25	4.87	14.56	5.04	13.96	5.21	13.43	5.39

ASC-60BI2

Cooling

Fan speed	Indoor air temperature		Outdoor dry bulb temperature														
			25			30			35			40			46		
			TC	SHC	PI	TC	SHC	PI	TC	SHC	PI	TC	SHC	PI	TC	SHC	PI
	DB	WB	kW	kW	kW	kW	kW	kW	kW	kW	kW	kW	kW	kW	kW	kW	kW
Turbo	20	14	13.51	8.26	4.09	13.44	8.22	4.62	12.90	7.89	4.88	12.38	7.57	5.09	11.36	6.95	5.52
	24	17	14.32	9.46	4.29	14.25	9.41	4.85	13.67	9.03	5.12	13.12	8.67	5.34	12.04	7.95	5.79
	26	18	14.90	10.31	4.42	14.82	10.26	4.99	14.22	9.84	5.27	13.65	9.45	5.49	12.52	8.67	5.96
	27	19	15.19	10.70	4.44	15.11	10.64	5.02	14.50	10.21	5.30	13.92	9.80	5.52	12.77	8.99	5.99
	30	22	16.11	11.84	4.57	16.02	11.77	5.16	15.37	11.29	5.46	14.76	10.84	5.68	13.54	9.95	6.17
	32	24	16.83	12.99	4.71	16.74	12.92	5.32	16.06	12.39	5.62	15.42	11.90	5.85	14.15	10.92	6.35
H	20	14	12.97	7.69	3.95	12.90	7.65	4.46	12.38	7.34	4.71	11.88	7.05	4.91	10.95	6.50	5.32
	23	16	13.75	8.86	4.14	13.68	8.82	4.68	13.12	8.46	4.94	12.60	8.12	5.15	11.61	7.48	5.59
	26	18	14.30	9.69	4.27	14.23	9.64	4.82	13.65	9.25	5.09	13.10	8.88	5.30	12.08	8.18	5.75
	27	19	14.59	10.07	4.29	14.51	10.01	4.84	13.92	9.61	5.11	13.36	9.22	5.33	12.32	8.50	5.78
	30	22	15.46	11.17	4.41	15.38	11.11	4.98	14.76	10.66	5.26	14.17	10.23	5.48	13.06	9.43	5.95
	32	24	16.16	12.29	4.54	16.07	12.23	5.13	15.42	11.73	5.42	14.80	11.26	5.64	13.64	10.38	6.12
M	20	14	12.32	7.09	3.77	12.26	7.05	4.26	11.76	6.76	4.50	11.29	6.49	4.69	10.41	5.98	5.08
	23	16	13.06	8.21	3.96	12.99	8.17	4.47	12.47	7.84	4.72	11.97	7.52	4.92	11.03	6.94	5.33
	26	18	13.59	9.01	4.07	13.51	8.96	4.60	12.96	8.60	4.86	12.45	8.25	5.06	11.47	7.61	5.49
	27	19	13.86	9.37	4.09	13.78	9.32	4.62	13.22	8.94	4.88	12.70	8.59	5.09	11.70	7.91	5.52
	30	22	14.69	10.43	4.21	14.61	10.37	4.76	14.02	9.95	5.03	13.46	9.55	5.23	12.40	8.81	5.68
	32	24	15.35	11.51	4.34	15.27	11.45	4.90	14.65	10.99	5.17	14.06	10.55	5.39	12.96	9.72	5.85
L	20	14	11.34	6.32	3.68	11.28	6.28	4.15	10.82	6.03	4.39	10.39	5.79	4.57	9.57	5.33	4.96
	23	16	12.02	7.37	3.86	11.95	7.33	4.35	11.47	7.03	4.60	11.01	6.75	4.79	10.15	6.22	5.20
	26	18	12.50	8.11	3.97	12.43	8.07	4.48	11.93	7.74	4.74	11.45	7.43	4.93	10.55	6.85	5.35
	27	19	12.75	8.45	3.99	12.68	8.40	4.50	12.17	8.06	4.76	11.68	7.74	4.96	10.77	7.13	5.38
	30	22	13.51	9.43	4.11	13.44	9.38	4.64	12.90	9.00	4.90	12.38	8.64	5.10	11.41	7.96	5.54
	32	24	14.12	10.45	4.23	14.05	10.39	4.77	13.48	9.97	5.04	12.94	9.57	5.25	11.93	8.82	5.70

Heating

Fan speed	Outdoor air temperature		Indoor dry bulb temperature									
			16		18		20		22		24	
			TC	PI	TC	PI	TC	PI	TC	PI	TC	PI
	DB	WB	kW	kW	kW	kW	kW	kW	kW	kW	kW	kW
Turbo	-10	-11	12.31	5.03	11.67	5.17	11.14	5.36	10.68	5.54	10.27	5.72
	-5	-5.6	12.96	4.89	12.28	5.02	11.73	5.20	11.25	5.37	10.81	5.55
	0	-0.7	14.08	4.96	13.35	5.10	12.75	5.28	12.22	5.45	11.75	5.64
	7	6	18.78	5.36	17.80	5.51	17.00	5.70	16.30	5.89	15.67	6.09
	10	8	19.72	5.52	18.69	5.67	17.85	5.87	17.11	6.07	16.46	6.27
H	-10	-11	11.98	5.01	11.35	5.15	10.84	5.33	10.40	5.51	10.00	5.69
	-5	-5.6	12.61	4.86	11.95	5.00	11.41	5.17	10.94	5.35	10.52	5.53
	0	-0.7	13.70	4.94	12.99	5.07	12.41	5.25	11.89	5.43	11.44	5.61
	7	6	18.27	5.33	17.32	5.48	16.54	5.67	15.86	5.86	15.25	6.06
	10	8	19.18	5.49	18.19	5.64	17.37	5.84	16.65	6.04	16.01	6.24

Fan speed	Outdoor air temperature		Indoor dry bulb temperature									
			16		18		20		22		24	
			TC	PI	TC	PI	TC	PI	TC	PI	TC	PI
	DB	WB	kW	kW	kW	kW	kW	kW	kW	kW	kW	kW
M	-10	-11	11.59	5.08	10.99	5.23	10.50	5.41	10.06	5.59	9.68	5.78
	-5	-5.6	12.20	4.94	11.57	5.07	11.05	5.25	10.59	5.43	10.19	5.61
	0	-0.7	13.26	5.01	12.57	5.15	12.01	5.33	11.51	5.51	11.07	5.69
	7	6	17.69	5.41	16.77	5.56	16.01	5.76	15.35	5.95	14.76	6.15
	10	8	18.57	5.57	17.60	5.73	16.81	5.93	16.12	6.13	15.50	6.33
L	-10	-11	11.01	5.24	10.44	5.39	9.97	5.58	9.56	5.77	9.19	5.96
	-5	-5.6	11.59	5.09	10.99	5.23	10.50	5.42	10.06	5.60	9.68	5.79
	0	-0.7	12.60	5.17	11.95	5.31	11.41	5.50	10.94	5.68	10.52	5.87
	7	6	16.80	5.58	15.93	5.74	15.21	5.94	14.58	6.14	14.02	6.34
	10	8	17.64	5.75	16.72	5.91	15.97	6.12	15.31	6.32	14.72	6.53

Symbols:
DB: Dry bulb temperature
WB: Wet bulb temperature
TC: Total cooling(heating) capacity
SHC: Sensible heat capacity
PI: Power input (compressor + indoor fan motor + outdoor fan motor)

1. The above data are based on the following conditions.

—	Power Supply	Equivalent Piping Length

2. Capacities are net, including a deduction for cooling (an addition for heating) for indoor fan motor heat.

5.1.2 Duct Type

ASD-12BI2
Cooling

Fan speed	Indoor air temperature		Outdoor dry bulb temperature														
			25			30			35			40			46		
			TC	SHC	PI	TC	SHC	PI	TC	SHC	PI	TC	SHC	PI	TC	SHC	PI
	DB	WB	kW	kW	kW	kW	kW	kW	kW	kW	kW	kW	kW	kW	kW	kW	kW
Turbo	20	14	3.26	2.47	0.80	3.24	2.45	0.90	3.11	2.35	0.95	2.99	2.26	0.99	2.74	2.08	1.07
	24	17	3.46	2.72	0.83	3.44	2.71	0.94	3.30	2.60	1.00	3.17	2.49	1.04	2.91	2.29	1.13
	26	18	3.60	2.90	0.86	3.58	2.89	0.97	3.43	2.77	1.02	3.29	2.66	1.07	3.02	2.44	1.16
	27	19	3.67	2.99	0.86	3.65	2.97	0.97	3.50	2.85	1.03	3.36	2.74	1.07	3.08	2.51	1.16
	30	22	3.89	3.24	0.89	3.87	3.22	1.00	3.71	3.09	1.06	3.56	2.97	1.10	3.27	2.73	1.20
	32	24	4.06	3.48	0.92	4.04	3.46	1.03	3.88	3.32	1.09	3.72	3.19	1.14	3.42	2.93	1.23
H	20	14	3.13	2.30	0.77	3.11	2.29	0.87	2.99	2.20	0.92	2.87	2.11	0.95	2.64	1.94	1.03
	23	16	3.32	2.55	0.81	3.30	2.54	0.91	3.17	2.43	0.96	3.04	2.34	1.00	2.80	2.16	1.09
	26	18	3.45	2.73	0.83	3.43	2.71	0.94	3.29	2.60	0.99	3.16	2.50	1.03	2.91	2.30	1.12
	27	19	3.52	2.81	0.83	3.50	2.79	0.94	3.36	2.68	0.99	3.23	2.57	1.04	2.97	2.37	1.12
	30	22	3.73	3.06	0.86	3.71	3.04	0.97	3.56	2.92	1.02	3.42	2.80	1.07	3.15	2.58	1.16
	32	24	3.90	3.29	0.88	3.88	3.27	1.00	3.72	3.14	1.05	3.57	3.02	1.10	3.29	2.78	1.19
M	20	14	2.97	2.12	0.73	2.96	2.11	0.83	2.84	2.03	0.87	2.73	1.95	0.91	2.51	1.79	0.99
	23	16	3.15	2.36	0.77	3.14	2.35	0.87	3.01	2.26	0.92	2.89	2.17	0.96	2.66	2.00	1.04
	26	18	3.28	2.54	0.79	3.26	2.52	0.89	3.13	2.42	0.94	3.00	2.32	0.98	2.77	2.14	1.07
	27	19	3.34	2.62	0.80	3.33	2.60	0.90	3.19	2.50	0.95	3.06	2.40	0.99	2.82	2.21	1.07
	30	22	3.55	2.85	0.82	3.53	2.84	0.92	3.38	2.72	0.98	3.25	2.61	1.02	2.99	2.41	1.10
	32	24	3.71	3.08	0.84	3.69	3.07	0.95	3.54	2.94	1.01	3.39	2.82	1.05	3.13	2.60	1.14

Fan speed	Indoor air temperature		Outdoor dry bulb temperature														
			25			30			35			40			46		
			TC	SHC	PI	TC	SHC	PI	TC	SHC	PI	TC	SHC	PI	TC	SHC	PI
	DB	WB	kW	kW	kW	kW	kW	kW	kW	kW	kW	kW	kW	kW	kW	kW	kW
L	20	14	2.74	1.90	0.71	2.72	1.89	0.81	2.61	1.81	0.85	2.51	1.74	0.89	2.31	1.60	0.96
	23	16	2.90	2.12	0.75	2.89	2.11	0.85	2.77	2.03	0.89	2.66	1.95	0.93	2.45	1.79	1.01
	26	18	3.02	2.28	0.77	3.00	2.27	0.87	2.88	2.18	0.92	2.76	2.09	0.96	2.55	1.93	1.04
	27	19	3.08	2.36	0.78	3.06	2.35	0.88	2.94	2.25	0.92	2.82	2.16	0.96	2.60	1.99	1.05
	30	22	3.26	2.58	0.80	3.24	2.57	0.90	3.11	2.46	0.95	2.99	2.36	0.99	2.75	2.18	1.08
	32	24	3.41	2.79	0.82	3.39	2.78	0.93	3.25	2.67	0.98	3.12	2.56	1.02	2.88	2.36	1.11

Heating

Fan speed	Outdoor air temperature		Indoor dry bulb temperature									
			16		18		20		22		24	
			TC	PI	TC	PI	TC	PI	TC	PI	TC	PI
	DB	WB	kW	kW	kW	kW	kW	kW	kW	kW	kW	kW
Turbo	-10	-11	2.90	0.88	2.75	0.91	2.62	0.94	2.51	0.97	2.42	1.00
	-5	-5.6	3.05	0.86	2.89	0.88	2.76	0.91	2.65	0.94	2.54	0.97
	0	-0.7	3.31	0.87	3.14	0.89	3.00	0.93	2.88	0.96	2.77	0.99
	7	6	4.42	0.94	4.19	0.97	4.00	1.00	3.84	1.03	3.69	1.07
	10	8	4.64	0.97	4.40	1.00	4.20	1.03	4.03	1.06	3.87	1.10
H	-10	-11	2.82	0.88	2.67	0.90	2.55	0.93	2.45	0.97	2.35	1.00
	-5	-5.6	2.97	0.85	2.81	0.88	2.69	0.91	2.57	0.94	2.48	0.97
	0	-0.7	3.22	0.87	3.06	0.89	2.92	0.92	2.80	0.95	2.69	0.98
	7	6	4.30	0.94	4.08	0.96	3.89	1.00	3.73	1.03	3.59	1.06
	10	8	4.51	0.96	4.28	0.99	4.09	1.02	3.92	1.06	3.77	1.09
M	-10	-11	2.73	0.89	2.59	0.92	2.47	0.95	2.37	0.98	2.28	1.01
	-5	-5.6	2.87	0.87	2.72	0.89	2.60	0.92	2.49	0.95	2.40	0.98
	0	-0.7	3.12	0.88	2.96	0.90	2.83	0.94	2.71	0.97	2.60	1.00
	7	6	4.16	0.95	3.94	0.98	3.77	1.01	3.61	1.04	3.47	1.08
	10	8	4.37	0.98	4.14	1.01	3.96	1.04	3.79	1.08	3.65	1.11
L	-10	-11	2.59	0.92	2.46	0.95	2.35	0.98	2.25	1.01	2.16	1.05
	-5	-5.6	2.73	0.89	2.59	0.92	2.47	0.95	2.37	0.98	2.28	1.01
	0	-0.7	2.96	0.91	2.81	0.93	2.68	0.96	2.57	1.00	2.47	1.03
	7	6	3.95	0.98	3.75	1.01	3.58	1.04	3.43	1.08	3.30	1.11
	10	8	4.15	1.01	3.94	1.04	3.76	1.07	3.60	1.11	3.46	1.15

ASD-18BI2

Cooling

Fan speed	Indoor air temperature		Outdoor dry bulb temperature														
			25			30			35			40			46		
			TC	SHC	PI	TC	SHC	PI	TC	SHC	PI	TC	SHC	PI	TC	SHC	PI
	DB	WB	kW	kW	kW	kW	kW	kW	kW	kW	kW	kW	kW	kW	kW	kW	kW
Turbo	20	14	4.66	3.19	1.14	4.64	3.17	1.28	4.45	3.05	1.35	4.27	2.92	1.41	3.92	2.68	1.53
	24	17	4.94	3.58	1.19	4.91	3.56	1.34	4.71	3.42	1.42	4.53	3.28	1.48	4.15	3.01	1.61
	26	18	5.14	3.85	1.23	5.11	3.83	1.38	4.90	3.68	1.46	4.71	3.53	1.52	4.32	3.24	1.65
	27	19	5.24	3.98	1.23	5.21	3.96	1.39	5.00	3.80	1.47	4.80	3.65	1.53	4.40	3.35	1.66
	30	22	5.55	4.36	1.27	5.52	4.34	1.43	5.30	4.16	1.51	5.09	3.99	1.58	4.67	3.66	1.71
	32	24	5.80	4.73	1.31	5.77	4.70	1.47	5.54	4.51	1.56	5.32	4.33	1.62	4.88	3.97	1.76
H	20	14	4.47	2.97	1.10	4.45	2.96	1.24	4.27	2.84	1.31	4.10	2.73	1.36	3.78	2.51	1.48
	23	16	4.74	3.35	1.15	4.72	3.34	1.30	4.52	3.20	1.37	4.34	3.07	1.43	4.00	2.83	1.55
	26	18	4.93	3.62	1.18	4.91	3.60	1.34	4.71	3.46	1.41	4.52	3.32	1.47	4.16	3.06	1.59
	27	19	5.03	3.75	1.19	5.00	3.73	1.34	4.80	3.58	1.42	4.61	3.43	1.48	4.25	3.16	1.60
	30	22	5.33	4.11	1.22	5.30	4.09	1.38	5.09	3.92	1.46	4.88	3.77	1.52	4.50	3.47	1.65
	32	24	5.57	4.47	1.26	5.54	4.45	1.42	5.32	4.27	1.50	5.10	4.10	1.57	4.71	3.78	1.70
M	20	14	4.25	2.74	1.05	4.23	2.73	1.18	4.06	2.62	1.25	3.89	2.51	1.30	3.59	2.32	1.41
	23	16	4.50	3.11	1.10	4.48	3.09	1.24	4.30	2.97	1.31	4.13	2.85	1.36	3.80	2.63	1.48
	26	18	4.68	3.37	1.13	4.66	3.35	1.28	4.47	3.21	1.35	4.29	3.09	1.40	3.96	2.84	1.52
	27	19	4.78	3.49	1.14	4.75	3.47	1.28	4.56	3.33	1.35	4.38	3.20	1.41	4.04	2.95	1.53
	30	22	5.07	3.84	1.17	5.04	3.82	1.32	4.83	3.66	1.39	4.64	3.52	1.45	4.28	3.24	1.58
	32	24	5.29	4.19	1.20	5.27	4.17	1.36	5.05	4.00	1.43	4.85	3.84	1.49	4.47	3.54	1.62
L	20	14	3.91	2.45	1.02	3.89	2.44	1.15	3.73	2.34	1.22	3.58	2.24	1.27	3.30	2.07	1.37
	23	16	4.14	2.79	1.07	4.12	2.78	1.21	3.95	2.66	1.28	3.80	2.56	1.33	3.50	2.36	1.44
	26	18	4.31	3.03	1.10	4.29	3.02	1.24	4.11	2.89	1.31	3.95	2.78	1.37	3.64	2.56	1.48
	27	19	4.40	3.14	1.11	4.37	3.13	1.25	4.20	3.00	1.32	4.03	2.88	1.37	3.71	2.66	1.49
	30	22	4.66	3.47	1.14	4.64	3.45	1.29	4.45	3.31	1.36	4.27	3.18	1.42	3.94	2.93	1.54
	32	24	4.87	3.80	1.17	4.84	3.78	1.32	4.65	3.63	1.40	4.46	3.48	1.46	4.11	3.21	1.58

Heating

Fan speed	Outdoor air temperature		Indoor dry bulb temperature									
			16		18		20		22		24	
			TC	PI	TC	PI	TC	PI	TC	PI	TC	PI
	DB	WB	kW	kW	kW	kW	kW	kW	kW	kW	kW	kW
Turbo	-10	-11	4.05	1.41	3.84	1.45	3.67	1.50	3.52	1.55	3.38	1.61
	-5	-5.6	4.27	1.37	4.05	1.41	3.86	1.46	3.70	1.51	3.56	1.56
	0	-0.7	4.64	1.39	4.40	1.43	4.20	1.48	4.03	1.53	3.87	1.58
	7	6	6.19	1.50	5.86	1.55	5.60	1.60	5.37	1.65	5.16	1.71
	10	8	6.49	1.55	6.16	1.59	5.88	1.65	5.64	1.70	5.42	1.76
H	-10	-11	3.95	1.41	3.74	1.45	3.57	1.50	3.42	1.55	3.29	1.60
	-5	-5.6	4.15	1.36	3.94	1.40	3.76	1.45	3.60	1.50	3.47	1.55
	0	-0.7	4.51	1.39	4.28	1.42	4.09	1.47	3.92	1.52	3.77	1.57
	7	6	6.02	1.50	5.71	1.54	5.45	1.59	5.22	1.65	5.02	1.70
	10	8	6.32	1.54	5.99	1.58	5.72	1.64	5.49	1.69	5.27	1.75

Fan speed	Outdoor air temperature ˚C		Indoor dry bulb temperature ˚C									
			16		18		20		22		24	
			TC	PI	TC	PI	TC	PI	TC	PI	TC	PI
	DB	WB	kW	kW	kW	kW	kW	kW	kW	kW	kW	kW
M	-10	-11	3.82	1.43	3.62	1.47	3.46	1.52	3.31	1.57	3.19	1.62
	-5	-5.6	4.02	1.39	3.81	1.42	3.64	1.47	3.49	1.52	3.36	1.57
	0	-0.7	4.37	1.41	4.14	1.45	3.96	1.50	3.79	1.55	3.65	1.60
	7	6	5.83	1.52	5.52	1.56	5.27	1.62	5.06	1.67	4.86	1.73
	10	8	6.12	1.56	5.80	1.61	5.54	1.66	5.31	1.72	5.11	1.78
L	-10	-11	3.63	1.47	3.44	1.51	3.28	1.57	3.15	1.62	3.03	1.67
	-5	-5.6	3.82	1.43	3.62	1.47	3.46	1.52	3.31	1.57	3.19	1.62
	0	-0.7	4.15	1.45	3.94	1.49	3.76	1.54	3.60	1.59	3.46	1.65
	7	6	5.53	1.57	5.25	1.61	5.01	1.67	4.80	1.72	4.62	1.78
	10	8	5.81	1.61	5.51	1.66	5.26	1.72	5.04	1.77	4.85	1.83

ASD-24BI2
Cooling

Fan speed	Indoor air temperature ˚C		Outdoor dry bulb temperature ˚C														
			25			30			35			40			46		
			TC	SHC	PI	TC	SHC	PI	TC	SHC	PI	TC	SHC	PI	TC	SHC	PI
	DB	WB	kW	kW	kW	kW	kW	kW	kW	kW	kW	kW	kW	kW	kW	kW	kW
Turbo	20	14	6.62	5.10	1.48	6.58	5.07	1.67	6.31	4.87	1.77	6.06	4.67	1.84	5.56	4.29	2.00
	24	17	7.01	5.61	1.56	6.98	5.58	1.76	6.69	5.35	1.86	6.43	5.14	1.93	5.90	4.71	2.10
	26	18	7.29	5.97	1.60	7.26	5.94	1.81	6.96	5.70	1.91	6.68	5.47	1.99	6.13	5.02	2.16
	27	19	7.44	6.14	1.61	7.40	6.11	1.82	7.10	5.86	1.92	6.82	5.63	2.00	6.25	5.16	2.17
	30	22	7.89	6.65	1.66	7.84	6.62	1.87	7.53	6.35	1.98	7.23	6.09	2.06	6.63	5.59	2.23
	32	24	8.24	7.13	1.71	8.20	7.09	1.93	7.86	6.80	2.03	7.55	6.53	2.12	6.93	5.99	2.30
H	20	14	6.35	4.76	1.43	6.32	4.73	1.62	6.06	4.54	1.71	5.82	4.36	1.78	5.36	4.02	1.93
	23	16	6.73	5.26	1.50	6.70	5.23	1.69	6.43	5.02	1.79	6.17	4.82	1.87	5.69	4.44	2.02
	26	18	7.00	5.61	1.55	6.97	5.58	1.74	6.68	5.35	1.84	6.42	5.14	1.92	5.91	4.74	2.08
	27	19	7.14	5.78	1.55	7.10	5.75	1.75	6.82	5.51	1.85	6.54	5.29	1.93	6.03	4.88	2.09
	30	22	7.57	6.27	1.60	7.53	6.24	1.80	7.22	5.99	1.91	6.94	5.75	1.99	6.39	5.30	2.15
	32	24	7.91	6.74	1.65	7.87	6.71	1.86	7.55	6.44	1.96	7.25	6.18	2.04	6.68	5.70	2.22
M	20	14	6.03	4.39	1.37	6.00	4.37	1.54	5.76	4.19	1.63	5.53	4.02	1.70	5.10	3.71	1.84
	23	16	6.40	4.88	1.43	6.36	4.85	1.62	6.10	4.65	1.71	5.86	4.47	1.78	5.40	4.12	1.93
	26	18	6.65	5.22	1.48	6.62	5.19	1.67	6.35	4.98	1.76	6.09	4.78	1.83	5.62	4.41	1.99
	27	19	6.79	5.38	1.48	6.75	5.35	1.67	6.48	5.13	1.77	6.22	4.93	1.84	5.73	4.54	2.00
	30	22	7.19	5.86	1.53	7.15	5.83	1.72	6.86	5.59	1.82	6.59	5.37	1.90	6.07	4.95	2.06
	32	24	7.52	6.31	1.57	7.48	6.28	1.77	7.17	6.02	1.87	6.89	5.78	1.95	6.35	5.33	2.12
L	20	14	5.55	3.92	1.33	5.52	3.90	1.50	5.30	3.75	1.59	5.09	3.60	1.65	4.69	3.31	1.80
	23	16	5.88	4.38	1.40	5.85	4.36	1.58	5.62	4.18	1.67	5.39	4.01	1.74	4.97	3.70	1.88
	26	18	6.12	4.70	1.44	6.09	4.67	1.62	5.84	4.48	1.72	5.61	4.31	1.79	5.17	3.97	1.94
	27	19	6.24	4.85	1.45	6.21	4.82	1.63	5.96	4.63	1.72	5.72	4.44	1.80	5.27	4.10	1.95
	30	22	6.62	5.29	1.49	6.58	5.27	1.68	6.31	5.05	1.77	6.06	4.85	1.85	5.59	4.47	2.01
	32	24	6.91	5.72	1.53	6.88	5.69	1.73	6.60	5.46	1.83	6.34	5.24	1.90	5.84	4.83	2.06

Heating

Fan speed	Outdoor air temperature ˚C		Indoor dry bulb temperature ˚C									
			16		18		20		22		24	
			TC	PI	TC	PI	TC	PI	TC	PI	TC	PI
	DB	WB	kW	kW	kW	kW	kW	kW	kW	kW	kW	kW
Turbo	-10	-11	5.79	1.77	5.49	1.82	5.24	1.88	5.03	1.94	4.83	2.01
	-5	-5.6	6.10	1.71	5.78	1.76	5.52	1.82	5.29	1.89	5.09	1.95
	0	-0.7	6.63	1.74	6.28	1.79	6.00	1.85	5.75	1.91	5.53	1.98
	7	6	8.84	1.88	8.38	1.93	8.00	2.00	7.67	2.07	7.38	2.14
	10	8	9.28	1.94	8.80	1.99	8.40	2.06	8.05	2.13	7.74	2.20
H	-10	-11	5.64	1.76	5.34	1.81	5.10	1.87	4.89	1.93	4.70	2.00
	-5	-5.6	5.93	1.71	5.62	1.75	5.37	1.82	5.15	1.88	4.95	1.94
	0	-0.7	6.45	1.73	6.11	1.78	5.84	1.84	5.60	1.90	5.38	1.97
	7	6	8.60	1.87	8.15	1.92	7.78	1.99	7.46	2.06	7.18	2.13
	10	8	9.03	1.93	8.56	1.98	8.17	2.05	7.84	2.12	7.53	2.19
M	-10	-11	5.46	1.78	5.17	1.83	4.94	1.90	4.74	1.96	4.55	2.03
	-5	-5.6	5.74	1.73	5.44	1.78	5.20	1.84	4.98	1.90	4.79	1.97
	0	-0.7	6.24	1.76	5.92	1.81	5.65	1.87	5.42	1.93	5.21	2.00
	7	6	8.32	1.90	7.89	1.95	7.53	2.02	7.22	2.09	6.95	2.16
	10	8	8.74	1.96	8.28	2.01	7.91	2.08	7.59	2.15	7.29	2.22
L	-10	-11	5.18	1.84	4.91	1.89	4.69	1.96	4.50	2.02	4.33	2.09
	-5	-5.6	5.46	1.79	5.17	1.84	4.94	1.90	4.74	1.96	4.55	2.03
	0	-0.7	5.93	1.81	5.62	1.86	5.37	1.93	5.15	1.99	4.95	2.06
	7	6	7.91	1.96	7.50	2.01	7.16	2.08	6.86	2.15	6.60	2.23
	10	8	8.30	2.02	7.87	2.07	7.52	2.15	7.21	2.22	6.93	2.29

ASD-30BI2
Cooling

Fan speed	Indoor air temperature ˚C		Outdoor dry bulb temperature ˚C														
			25			30			35			40			46		
			TC	SHC	PI	TC	SHC	PI	TC	SHC	PI	TC	SHC	PI	TC	SHC	PI
	DB	WB	kW	kW	kW	kW	kW	kW	kW	kW	kW	kW	kW	kW	kW	kW	kW
Turbo	20	14	7.92	5.84	1.93	7.88	5.81	2.18	7.56	5.57	2.30	7.26	5.35	2.40	6.66	4.91	2.60
	24	17	8.40	6.47	2.03	8.35	6.44	2.29	8.01	6.17	2.42	7.69	5.93	2.52	7.06	5.44	2.73
	26	18	8.73	6.92	2.09	8.69	6.88	2.35	8.33	6.60	2.49	8.00	6.34	2.59	7.34	5.81	2.81
	27	19	8.91	7.13	2.10	8.86	7.09	2.37	8.50	6.80	2.50	8.16	6.53	2.60	7.49	5.99	2.83
	30	22	9.44	7.75	2.16	9.39	7.71	2.44	9.01	7.40	2.57	8.65	7.10	2.68	7.94	6.51	2.91
	32	24	9.87	8.34	2.22	9.81	8.30	2.51	9.42	7.96	2.65	9.04	7.64	2.76	8.29	7.01	2.99
H	20	14	7.60	5.45	1.86	7.56	5.42	2.10	7.26	5.20	2.22	6.97	4.99	2.31	6.42	4.60	2.51
	23	16	8.06	6.06	1.95	8.02	6.03	2.21	7.69	5.79	2.33	7.39	5.56	2.43	6.81	5.12	2.63
	26	18	8.38	6.50	2.01	8.34	6.46	2.27	8.00	6.20	2.40	7.68	5.95	2.50	7.08	5.49	2.71
	27	19	8.55	6.70	2.02	8.51	6.67	2.28	8.16	6.40	2.41	7.83	6.14	2.51	7.22	5.66	2.73
	30	22	9.06	7.31	2.08	9.02	7.27	2.35	8.65	6.98	2.48	8.30	6.70	2.59	7.65	6.17	2.81
	32	24	9.47	7.89	2.14	9.42	7.85	2.42	9.04	7.53	2.56	8.68	7.23	2.66	8.00	6.66	2.89

Fan speed	Indoor air temperature ˚C		Outdoor dry bulb temperature ˚C														
			25			30			35			40			46		
			TC	SHC	PI	TC	SHC	PI	TC	SHC	PI	TC	SHC	PI	TC	SHC	PI
	DB	WB	kW	kW	kW	kW	kW	kW	kW	kW	kW	kW	kW	kW	kW	kW	kW
M	20	14	7.22	5.03	1.78	7.19	5.00	2.01	6.89	4.80	2.12	6.62	4.61	2.21	6.10	4.24	2.40
	23	16	7.66	5.62	1.87	7.62	5.59	2.11	7.31	5.37	2.23	7.02	5.15	2.32	6.47	4.75	2.52
	26	18	7.96	6.04	1.92	7.92	6.01	2.17	7.60	5.77	2.29	7.30	5.54	2.39	6.73	5.10	2.59
	27	19	8.12	6.24	1.93	8.08	6.21	2.18	7.75	5.96	2.30	7.44	5.72	2.40	6.86	5.27	2.60
	30	22	8.61	6.82	1.99	8.57	6.79	2.24	8.22	6.51	2.37	7.89	6.25	2.47	7.27	5.76	2.68
	32	24	9.00	7.39	2.05	8.95	7.35	2.31	8.59	7.05	2.44	8.24	6.77	2.54	7.60	6.24	2.76
L	20	14	6.65	4.49	1.73	6.61	4.47	1.96	6.34	4.29	2.07	6.09	4.11	2.15	5.61	3.79	2.34
	23	16	7.05	5.05	1.82	7.01	5.02	2.05	6.72	4.82	2.17	6.45	4.63	2.26	5.95	4.26	2.45
	26	18	7.33	5.44	1.87	7.29	5.41	2.11	6.99	5.19	2.23	6.71	4.99	2.33	6.19	4.60	2.52
	27	19	7.47	5.63	1.88	7.43	5.60	2.12	7.13	5.37	2.24	6.85	5.16	2.34	6.31	4.75	2.54
	30	22	7.92	6.17	1.94	7.88	6.14	2.19	7.56	5.89	2.31	7.26	5.65	2.41	6.69	5.21	2.61
	32	24	8.28	6.70	1.99	8.23	6.66	2.25	7.90	6.39	2.38	7.58	6.14	2.48	6.99	5.66	2.69

Heating

Fan speed	Outdoor air temperature ˚C		Indoor dry bulb temperature ˚C									
			16		18		20		22		24	
			TC	PI	TC	PI	TC	PI	TC	PI	TC	PI
	DB	WB	kW	kW	kW	kW	kW	kW	kW	kW	kW	kW
Turbo	-10	-11	6.15	1.99	5.83	2.04	5.57	2.11	5.34	2.18	5.14	2.26
	-5	-5.6	6.48	1.93	6.14	1.98	5.87	2.05	5.62	2.12	5.41	2.19
	0	-0.7	7.04	1.96	6.68	2.01	6.38	2.08	6.11	2.15	5.88	2.23
	7	6	9.39	2.11	8.90	2.17	8.50	2.25	8.15	2.33	7.84	2.40
	10	8	9.86	2.18	9.35	2.24	8.93	2.32	8.56	2.40	8.23	2.48
H	-10	-11	5.99	1.98	5.68	2.03	5.42	2.10	5.20	2.17	5.00	2.25
	-5	-5.6	6.30	1.92	5.98	1.97	5.71	2.04	5.47	2.11	5.26	2.18
	0	-0.7	6.85	1.95	6.50	2.00	6.20	2.07	5.95	2.14	5.72	2.21
	7	6	9.14	2.10	8.66	2.16	8.27	2.24	7.93	2.31	7.62	2.39
	10	8	9.59	2.17	9.09	2.23	8.68	2.31	8.33	2.38	8.01	2.46
M	-10	-11	5.80	2.01	5.50	2.06	5.25	2.14	5.03	2.21	4.84	2.28
	-5	-5.6	6.10	1.95	5.78	2.00	5.52	2.07	5.30	2.14	5.09	2.21
	0	-0.7	6.63	1.98	6.29	2.03	6.00	2.10	5.76	2.17	5.54	2.25
	7	6	8.84	2.14	8.38	2.20	8.01	2.27	7.68	2.35	7.38	2.43
	10	8	9.29	2.20	8.80	2.26	8.41	2.34	8.06	2.42	7.75	2.50
L	-10	-11	5.51	2.07	5.22	2.13	4.99	2.20	4.78	2.28	4.60	2.35
	-5	-5.6	5.80	2.01	5.50	2.07	5.25	2.14	5.03	2.21	4.84	2.28
	0	-0.7	6.30	2.04	5.97	2.10	5.70	2.17	5.47	2.24	5.26	2.32
	7	6	8.40	2.20	7.96	2.26	7.61	2.34	7.29	2.42	7.01	2.50
	10	8	8.82	2.27	8.36	2.33	7.99	2.41	7.66	2.49	7.36	2.58

ASD-36BI2

Cooling

Fan speed	Indoor air temperature ˚C		Outdoor dry bulb temperature ˚C														
			25			30			35			40			46		
			TC	SHC	PI	TC	SHC	PI	TC	SHC	PI	TC	SHC	PI	TC	SHC	PI
	DB	WB	kW	kW	kW	kW	kW	kW	kW	kW	kW	kW	kW	kW	kW	kW	kW
Turbo	20	14	9.79	7.89	2.32	9.73	7.85	2.62	9.34	7.53	2.76	8.96	7.23	2.88	8.23	6.44	3.23
	24	17	10.37	8.62	2.43	10.32	8.57	2.74	9.90	8.22	2.90	9.50	7.89	3.02	8.72	7.06	3.39
	26	18	10.79	9.13	2.50	10.73	9.08	2.83	10.29	8.71	2.99	9.88	8.37	3.11	9.07	7.50	3.49
	27	19	11.00	9.38	2.52	10.94	9.33	2.84	10.50	8.95	3.00	10.08	8.59	3.12	9.25	7.72	3.50
	30	22	11.66	10.12	2.59	11.60	10.07	2.92	11.13	9.66	3.09	10.69	9.27	3.22	9.80	8.35	3.61
	32	24	12.19	10.80	2.67	12.12	10.74	3.01	11.63	10.31	3.18	11.17	9.89	3.31	10.25	8.93	3.71
H	20	14	9.39	7.36	2.24	9.34	7.32	2.52	8.96	7.03	2.67	8.61	6.75	2.78	7.93	6.03	3.11
	23	16	9.96	8.08	2.35	9.90	8.03	2.65	9.50	7.71	2.80	9.12	7.40	2.91	8.41	6.65	3.27
	26	18	10.36	8.58	2.41	10.30	8.54	2.73	9.88	8.19	2.88	9.49	7.86	3.00	8.74	7.09	3.36
	27	19	10.56	8.82	2.43	10.51	8.78	2.74	10.08	8.42	2.89	9.68	8.08	3.01	8.92	7.29	3.38
	30	22	11.20	9.54	2.50	11.14	9.49	2.82	10.68	9.11	2.98	10.26	8.74	3.10	9.46	7.91	3.48
	32	24	11.70	10.21	2.57	11.64	10.16	2.90	11.17	9.75	3.07	10.72	9.36	3.19	9.88	8.49	3.58
M	20	14	8.92	6.80	2.13	8.88	6.76	2.41	8.52	6.49	2.55	8.18	6.23	2.65	7.54	5.57	2.97
	23	16	9.46	7.49	2.24	9.41	7.45	2.53	9.03	7.15	2.67	8.67	6.86	2.78	7.99	6.17	3.12
	26	18	9.84	7.98	2.31	9.79	7.94	2.60	9.39	7.62	2.75	9.01	7.31	2.86	8.31	6.59	3.21
	27	19	10.03	8.21	2.32	9.98	8.17	2.62	9.58	7.84	2.76	9.19	7.53	2.88	8.47	6.79	3.23
	30	22	10.64	8.91	2.38	10.58	8.86	2.69	10.15	8.50	2.84	9.75	8.16	2.96	8.98	7.38	3.32
	32	24	11.12	9.56	2.46	11.06	9.51	2.77	10.61	9.12	2.93	10.18	8.76	3.05	9.39	7.95	3.42
L	20	14	8.21	6.08	2.08	8.17	6.05	2.35	7.83	5.80	2.48	7.52	5.57	2.59	6.93	4.98	2.90
	23	16	8.70	6.73	2.18	8.66	6.69	2.46	8.30	6.42	2.60	7.97	6.16	2.71	7.35	5.54	3.04
	26	18	9.05	7.19	2.25	9.00	7.15	2.54	8.64	6.86	2.68	8.29	6.59	2.79	7.64	5.94	3.13
	27	19	9.23	7.41	2.26	9.18	7.37	2.55	8.81	7.07	2.69	8.46	6.79	2.81	7.80	6.12	3.15
	30	22	9.79	8.05	2.32	9.73	8.01	2.62	9.34	7.68	2.77	8.97	7.38	2.89	8.26	6.67	3.24
	32	24	10.23	8.67	2.39	10.17	8.62	2.70	9.76	8.27	2.85	9.37	7.94	2.97	8.64	7.20	3.33

Heating

Fan speed	Outdoor air temperature ˚C		Indoor dry bulb temperature ˚C									
			16		18		20		22		24	
			TC	PI	TC	PI	TC	PI	TC	PI	TC	PI
	DB	WB	kW	kW	kW	kW	kW	kW	kW	kW	kW	kW
Turbo	-10	-11	8.33	2.47	7.89	2.54	7.54	2.63	7.23	2.72	6.95	2.81
	-5	-5.6	8.76	2.40	8.31	2.47	7.94	2.55	7.61	2.64	7.32	2.73
	0	-0.7	9.53	2.44	9.03	2.50	8.63	2.59	8.27	2.68	7.95	2.77
	7	6	12.70	2.63	12.04	2.71	11.50	2.80	11.03	2.89	10.60	2.99
	10	8	13.34	2.71	12.64	2.79	12.08	2.88	11.58	2.98	11.13	3.08

Fan speed	Outdoor air temperature ˚C		Indoor dry bulb temperature ˚C									
			16		18		20		22		24	
			TC	PI	TC	PI	TC	PI	TC	PI	TC	PI
	DB	WB	kW	kW	kW	kW	kW	kW	kW	kW	kW	kW
H	-10	-11	8.10	2.46	7.68	2.53	7.33	2.62	7.03	2.71	6.76	2.80
	-5	-5.6	8.53	2.39	8.08	2.46	7.72	2.54	7.40	2.63	7.12	2.71
	0	-0.7	9.27	2.42	8.79	2.49	8.39	2.58	8.05	2.67	7.74	2.76
	7	6	12.36	2.62	11.72	2.69	11.19	2.79	10.73	2.88	10.32	2.98
	10	8	12.98	2.70	12.30	2.77	11.75	2.87	11.26	2.97	10.83	3.07
M	-10	-11	7.84	2.50	7.43	2.57	7.10	2.66	6.81	2.75	6.55	2.84
	-5	-5.6	8.26	2.42	7.83	2.49	7.47	2.58	7.17	2.67	6.89	2.76
	0	-0.7	8.97	2.46	8.51	2.53	8.12	2.62	7.79	2.71	7.49	2.80
	7	6	11.96	2.66	11.34	2.73	10.83	2.83	10.38	2.92	9.99	3.02
	10	8	12.56	2.74	11.91	2.81	11.37	2.91	10.90	3.01	10.48	3.11
L	-10	-11	7.45	2.58	7.06	2.65	6.75	2.74	6.47	2.83	6.22	2.93
	-5	-5.6	7.84	2.50	7.43	2.57	7.10	2.66	6.81	2.75	6.55	2.84
	0	-0.7	8.52	2.54	8.08	2.61	7.72	2.70	7.40	2.79	7.11	2.88
	7	6	11.37	2.74	10.77	2.82	10.29	2.92	9.87	3.01	9.49	3.12
	10	8	11.93	2.82	11.31	2.90	10.80	3.00	10.36	3.10	9.96	3.21

ASD-42BI2
Cooling

Fan speed	Indoor air temperature ˚C		Outdoor dry bulb temperature ˚C														
			25			30			35			40			46		
			TC	SHC	PI	TC	SHC	PI	TC	SHC	PI	TC	SHC	PI	TC	SHC	PI
	DB	WB	kW	kW	kW	kW	kW	kW	kW	kW	kW	kW	kW	kW	kW	kW	kW
Turbo	20	14	11.28	8.19	2.77	11.22	8.15	3.12	10.76	7.82	3.30	10.33	7.51	3.44	9.48	6.89	3.73
	24	17	11.95	9.10	2.90	11.89	9.05	3.28	11.41	8.68	3.46	10.95	8.34	3.60	10.05	7.65	3.91
	26	18	12.43	9.74	2.99	12.37	9.69	3.37	11.86	9.29	3.56	11.39	8.92	3.71	10.45	8.19	4.03
	27	19	12.68	10.04	3.00	12.61	9.99	3.39	12.10	9.58	3.58	11.62	9.20	3.73	10.66	8.44	4.05
	30	22	13.44	10.93	3.09	13.37	10.87	3.49	12.83	10.43	3.69	12.31	10.02	3.84	11.30	9.19	4.16
	32	24	14.05	11.79	3.18	13.97	11.73	3.59	13.40	11.25	3.79	12.87	10.80	3.95	11.81	9.91	4.29
H	20	14	10.83	7.64	2.67	10.77	7.60	3.01	10.33	7.29	3.18	9.92	7.00	3.31	9.14	6.45	3.60
	23	16	11.47	8.53	2.80	11.41	8.48	3.16	10.95	8.14	3.34	10.51	7.81	3.48	9.69	7.20	3.77
	26	18	11.93	9.15	2.88	11.87	9.10	3.25	11.39	8.73	3.44	10.93	8.38	3.58	10.08	7.73	3.88
	27	19	12.17	9.44	2.90	12.11	9.39	3.27	11.62	9.01	3.45	11.15	8.65	3.60	10.28	7.98	3.90
	30	22	12.90	10.31	2.98	12.83	10.26	3.37	12.31	9.84	3.56	11.82	9.45	3.70	10.90	8.71	4.02
	32	24	13.48	11.15	3.07	13.41	11.09	3.46	12.87	10.64	3.66	12.35	10.22	3.81	11.39	9.42	4.14
M	20	14	10.28	7.05	2.55	10.23	7.01	2.88	9.81	6.73	3.04	9.42	6.46	3.16	8.68	5.95	3.43
	23	16	10.90	7.91	2.67	10.84	7.86	3.02	10.40	7.54	3.19	9.99	7.24	3.32	9.21	6.68	3.60
	26	18	11.34	8.51	2.75	11.28	8.47	3.11	10.82	8.12	3.28	10.39	7.80	3.42	9.57	7.19	3.71
	27	19	11.56	8.79	2.76	11.50	8.75	3.12	11.04	8.39	3.30	10.59	8.06	3.43	9.77	7.43	3.73
	30	22	12.26	9.63	2.85	12.19	9.57	3.21	11.70	9.19	3.39	11.23	8.82	3.54	10.35	8.13	3.84
	32	24	12.81	10.44	2.93	12.74	10.39	3.31	12.22	9.96	3.49	11.74	9.56	3.64	10.82	8.82	3.95

Fan speed	Indoor air temperature ˚C		Outdoor dry bulb temperature ˚C														
			25			30			35			40			46		
			TC	SHC	PI	TC	SHC	PI	TC	SHC	PI	TC	SHC	PI	TC	SHC	PI
	DB	WB	kW	kW	kW	kW	kW	kW	kW	kW	kW	kW	kW	kW	kW	kW	kW
L	20	14	9.46	6.30	2.48	9.41	6.26	2.80	9.03	6.01	2.96	8.67	5.77	3.09	7.99	5.32	3.35
	23	16	10.03	7.10	2.61	9.98	7.06	2.94	9.57	6.77	3.11	9.19	6.50	3.24	8.47	5.99	3.51
	26	18	10.43	7.66	2.68	10.38	7.62	3.03	9.95	7.31	3.20	9.56	7.02	3.33	8.81	6.47	3.61
	27	19	10.64	7.93	2.70	10.58	7.89	3.04	10.15	7.57	3.21	9.75	7.26	3.35	8.98	6.69	3.63
	30	22	11.28	8.70	2.77	11.22	8.66	3.13	10.76	8.30	3.31	10.33	7.97	3.45	9.52	7.35	3.74
	32	24	11.78	9.47	2.86	11.72	9.42	3.22	11.25	9.03	3.41	10.80	8.67	3.55	9.95	7.99	3.85

Heating

Fan speed	Outdoor air temperature ˚C		Indoor dry bulb temperature ˚C									
			16		18		20		22		24	
			TC	PI	TC	PI	TC	PI	TC	PI	TC	PI
	DB	WB	kW	kW	kW	kW	kW	kW	kW	kW	kW	kW
Turbo	-10	-11	9.77	3.27	9.27	3.36	8.85	3.48	8.48	3.59	8.16	3.71
	-5	-5.6	10.29	3.17	9.75	3.26	9.32	3.38	8.93	3.49	8.59	3.61
	0	-0.7	11.18	3.22	10.60	3.31	10.13	3.43	9.71	3.54	9.33	3.66
	7	6	14.91	3.48	14.14	3.57	13.50	3.70	12.94	3.82	12.45	3.95
	10	8	15.66	3.58	14.84	3.68	14.18	3.81	13.59	3.94	13.07	4.07
H	-10	-11	9.51	3.25	9.02	3.34	8.61	3.46	8.26	3.58	7.94	3.69
	-5	-5.6	10.01	3.16	9.49	3.24	9.06	3.36	8.69	3.47	8.36	3.59
	0	-0.7	10.88	3.20	10.32	3.29	9.85	3.41	9.45	3.52	9.08	3.64
	7	6	14.51	3.46	13.75	3.56	13.14	3.68	12.59	3.80	12.11	3.93
	10	8	15.23	3.56	14.44	3.66	13.79	3.79	13.22	3.92	12.72	4.05
M	-10	-11	9.21	3.30	8.73	3.39	8.33	3.51	7.99	3.63	7.68	3.75
	-5	-5.6	9.69	3.20	9.19	3.29	8.77	3.41	8.41	3.52	8.09	3.64
	0	-0.7	10.53	3.25	9.99	3.34	9.54	3.46	9.14	3.58	8.79	3.70
	7	6	14.04	3.51	13.31	3.61	12.72	3.74	12.19	3.86	11.72	3.99
	10	8	14.75	3.62	13.98	3.72	13.35	3.85	12.80	3.98	12.31	4.11
L	-10	-11	8.75	3.40	8.29	3.50	7.92	3.62	7.59	3.74	7.30	3.87
	-5	-5.6	9.21	3.30	8.73	3.40	8.33	3.52	7.99	3.63	7.68	3.76
	0	-0.7	10.01	3.35	9.49	3.45	9.06	3.57	8.69	3.69	8.35	3.81
	7	6	13.34	3.62	12.65	3.72	12.08	3.85	11.58	3.98	11.14	4.12
	10	8	14.01	3.73	13.28	3.84	12.68	3.97	12.16	4.10	11.69	4.24

ASD-48BI2

Cooling

Fan speed	Indoor air temperature ˚C		Outdoor dry bulb temperature ˚C														
			25			30			35			40			46		
			TC	SHC	PI	TC	SHC	PI	TC	SHC	PI	TC	SHC	PI	TC	SHC	PI
	DB	WB	kW	kW	kW	kW	kW	kW	kW	kW	kW	kW	kW	kW	kW	kW	kW
Turbo	20	14	12.49	9.83	3.48	12.42	9.78	3.92	11.92	9.38	4.15	11.44	9.01	4.32	10.50	8.27	4.69
	24	17	13.24	10.78	3.65	13.17	10.72	4.12	12.63	10.29	4.35	12.13	9.87	4.53	11.13	9.06	4.92
	26	18	13.77	11.45	3.75	13.69	11.39	4.24	13.14	10.92	4.48	12.61	10.49	4.66	11.57	9.62	5.06
	27	19	14.04	11.77	3.77	13.97	11.71	4.26	13.40	11.23	4.50	12.86	10.78	4.69	11.80	9.89	5.09
	30	22	14.88	12.72	3.88	14.81	12.66	4.38	14.20	12.14	4.63	13.64	11.66	4.83	12.51	10.70	5.23
	32	24	15.55	13.61	4.00	15.47	13.54	4.51	14.84	12.99	4.77	14.25	12.47	4.97	13.07	11.44	5.39
H	20	14	11.99	9.18	3.35	11.93	9.13	3.79	11.44	8.76	4.00	10.98	8.41	4.17	10.12	7.75	4.52
	23	16	12.71	10.10	3.52	12.64	10.05	3.97	12.13	9.64	4.20	11.64	9.26	4.37	10.73	8.53	4.74
	26	18	13.22	10.76	3.62	13.15	10.70	4.09	12.61	10.27	4.32	12.11	9.86	4.50	11.16	9.09	4.88
	27	19	13.48	11.07	3.64	13.41	11.01	4.11	12.86	10.57	4.34	12.35	10.14	4.52	11.38	9.35	4.91
	30	22	14.29	12.00	3.75	14.21	11.94	4.23	13.64	11.45	4.47	13.09	10.99	4.66	12.07	10.13	5.05
	32	24	14.93	12.87	3.86	14.85	12.80	4.35	14.25	12.28	4.60	13.68	11.79	4.79	12.61	10.87	5.20
M	20	14	11.39	8.47	3.20	11.33	8.43	3.62	10.87	8.08	3.82	10.43	7.76	3.98	9.62	7.15	4.32
	23	16	12.07	9.37	3.36	12.01	9.32	3.79	11.52	8.94	4.01	11.06	8.58	4.17	10.19	7.91	4.53
	26	18	12.56	10.01	3.46	12.49	9.95	3.90	11.98	9.55	4.12	11.50	9.17	4.30	10.60	8.45	4.66
	27	19	12.81	10.31	3.48	12.74	10.25	3.92	12.22	9.84	4.15	11.73	9.44	4.32	10.81	8.70	4.68
	30	22	13.57	11.20	3.58	13.50	11.14	4.04	12.95	10.69	4.27	12.44	10.26	4.44	11.46	9.46	4.82
	32	24	14.19	12.05	3.68	14.11	11.99	4.16	13.54	11.50	4.39	13.00	11.04	4.58	11.98	10.17	4.96
L	20	14	10.48	7.57	3.12	10.42	7.53	3.52	10.00	7.23	3.72	9.60	6.94	3.88	8.85	6.39	4.21
	23	16	11.11	8.42	3.27	11.05	8.37	3.70	10.60	8.03	3.91	10.18	7.71	4.07	9.38	7.11	4.41
	26	18	11.55	9.01	3.37	11.49	8.96	3.81	11.02	8.60	4.02	10.58	8.26	4.19	9.75	7.61	4.54
	27	19	11.78	9.29	3.39	11.72	9.24	3.82	11.24	8.87	4.04	10.79	8.51	4.21	9.95	7.85	4.57
	30	22	12.49	10.12	3.49	12.42	10.07	3.94	11.92	9.66	4.16	11.44	9.28	4.33	10.55	8.55	4.70
	32	24	13.05	10.92	3.59	12.98	10.87	4.05	12.45	10.42	4.28	11.96	10.01	4.46	11.02	9.22	4.84

Heating

Fan speed	Outdoor air temperature ˚C		Indoor dry bulb temperature ˚C									
			16		18		20		22		24	
			TC	PI	TC	PI	TC	PI	TC	PI	TC	PI
	DB	WB	kW	kW	kW	kW	kW	kW	kW	kW	kW	kW
Turbo	-10	-11	11.22	3.97	10.64	4.09	10.16	4.23	9.74	4.37	9.37	4.52
	-5	-5.6	11.81	3.86	11.20	3.97	10.70	4.11	10.25	4.24	9.86	4.38
	0	-0.7	12.84	3.92	12.17	4.03	11.63	4.17	11.15	4.31	10.72	4.45
	7	6	17.12	4.23	16.23	4.35	15.50	4.50	14.86	4.65	14.29	4.81
	10	8	17.98	4.36	17.04	4.48	16.28	4.64	15.60	4.79	15.00	4.95

Fan speed	Outdoor air temperature ˚C		Indoor dry bulb temperature ˚C									
			16		18		20		22		24	
			TC	PI	TC	PI	TC	PI	TC	PI	TC	PI
	DB	WB	kW	kW	kW	kW	kW	kW	kW	kW	kW	kW
H	-10	-11	10.92	3.95	10.35	4.06	9.89	4.21	9.48	4.35	9.11	4.49
	-5	-5.6	11.49	3.84	10.90	3.95	10.41	4.08	9.98	4.22	9.59	4.36
	0	-0.7	12.49	3.90	11.84	4.01	11.31	4.15	10.84	4.28	10.43	4.43
	7	6	16.66	4.21	15.79	4.33	15.08	4.48	14.46	4.63	13.90	4.78
	10	8	17.49	4.33	16.58	4.46	15.84	4.61	15.18	4.77	14.60	4.93
M	-10	-11	10.57	4.01	10.02	4.13	9.57	4.27	9.18	4.41	8.82	4.56
	-5	-5.6	11.13	3.90	10.55	4.01	10.07	4.15	9.66	4.29	9.29	4.43
	0	-0.7	12.09	3.96	11.47	4.07	10.95	4.21	10.50	4.35	10.09	4.50
	7	6	16.13	4.27	15.29	4.39	14.60	4.55	14.00	4.70	13.46	4.85
	10	8	16.93	4.40	16.05	4.52	15.33	4.68	14.70	4.84	14.13	5.00
L	-10	-11	10.04	4.14	9.52	4.26	9.09	4.40	8.72	4.55	8.38	4.70
	-5	-5.6	10.57	4.02	10.02	4.13	9.57	4.28	9.18	4.42	8.82	4.57
	0	-0.7	11.49	4.08	10.89	4.19	10.40	4.34	9.97	4.49	9.59	4.64
	7	6	15.32	4.41	14.52	4.53	13.87	4.69	13.30	4.84	12.79	5.01
	10	8	16.09	4.54	15.25	4.66	14.56	4.83	13.96	4.99	13.43	5.16

ASD-60BI2
Cooling

Fan speed	Indoor air temperature ˚C		Outdoor dry bulb temperature ˚C													
			25			30			35			40			46	
			TC	SHC	PI	TC	SHC	PI	TC	SHC	PI	TC	SHC	PI	TC	SHC	PI
	DB	WB	kW	kW	kW	kW	kW	kW	kW	kW	kW	kW	kW	kW	kW	kW	kW
Turbo	20	14	14.91	11.03	4.17	14.83	10.97	4.71	14.23	10.53	4.98	13.66	10.11	5.18	12.53	9.27	5.62
	24	17	15.81	12.21	4.38	15.72	12.15	4.94	15.08	11.66	5.22	14.48	11.19	5.44	13.29	10.27	5.90
	26	18	16.44	13.05	4.50	16.35	12.98	5.09	15.69	12.45	5.37	15.06	11.96	5.60	13.82	10.97	6.07
	27	19	16.77	13.44	4.53	16.68	13.37	5.11	16.00	12.83	5.40	15.36	12.32	5.62	14.09	11.30	6.10
	30	22	17.77	14.62	4.66	17.68	14.54	5.26	16.96	13.95	5.56	16.28	13.39	5.79	14.94	12.29	6.28
	32	24	18.57	15.73	4.80	18.47	15.65	5.42	17.72	15.01	5.72	17.02	14.41	5.96	15.61	13.22	6.47
H	20	14	14.31	10.29	4.02	14.24	10.23	4.54	13.66	9.82	4.80	13.11	9.43	5.00	12.09	8.69	5.42
	23	16	15.17	11.45	4.22	15.09	11.39	4.77	14.48	10.92	5.04	13.90	10.49	5.25	12.81	9.67	5.69
	26	18	15.78	12.26	4.35	15.70	12.20	4.91	15.06	11.70	5.18	14.46	11.24	5.40	13.33	10.36	5.86
	27	19	16.10	12.65	4.37	16.01	12.58	4.93	15.36	12.07	5.21	14.75	11.59	5.43	13.59	10.68	5.89
	30	22	17.06	13.79	4.50	16.97	13.71	5.08	16.28	13.16	5.36	15.63	12.63	5.59	14.41	11.64	6.06
	32	24	17.83	14.88	4.63	17.74	14.80	5.23	17.01	14.20	5.52	16.33	13.63	5.75	15.06	12.57	6.24
M	20	14	13.60	9.49	3.84	13.53	9.44	4.34	12.98	9.06	4.58	12.46	8.70	4.77	11.48	8.02	5.18
	23	16	14.41	10.61	4.03	14.34	10.56	4.55	13.76	10.13	4.81	13.21	9.72	5.01	12.17	8.96	5.43
	26	18	14.99	11.41	4.15	14.91	11.35	4.68	14.31	10.88	4.95	13.73	10.45	5.16	12.66	9.63	5.59
	27	19	15.29	11.78	4.17	15.21	11.71	4.71	14.59	11.24	4.97	14.01	10.79	5.18	12.91	9.94	5.62
	30	22	16.21	12.87	4.29	16.12	12.80	4.85	15.47	12.28	5.12	14.85	11.79	5.33	13.69	10.87	5.79
	32	24	16.94	13.93	4.42	16.85	13.86	4.99	16.16	13.30	5.27	15.52	12.76	5.49	14.30	11.77	5.96

Fan speed	Indoor air temperature ℃		Outdoor dry bulb temperature ℃														
			25			30			35			40			46		
			TC	SHC	PI	TC	SHC	PI	TC	SHC	PI	TC	SHC	PI	TC	SHC	PI
	DB	WB	kW	kW	kW	kW	kW	kW	kW	kW	kW	kW	kW	kW	kW	kW	kW
L	20	14	12.51	8.48	3.75	12.44	8.44	4.23	11.94	8.09	4.47	11.46	7.77	4.65	10.56	7.16	5.05
	23	16	13.26	9.53	3.93	13.19	9.48	4.44	12.66	9.10	4.69	12.15	8.73	4.88	11.20	8.05	5.30
	26	18	13.79	10.27	4.04	13.72	10.22	4.57	13.16	9.80	4.82	12.64	9.41	5.03	11.65	8.67	5.45
	27	19	14.07	10.62	4.07	13.99	10.56	4.59	13.42	10.13	4.85	12.89	9.73	5.05	11.88	8.97	5.48
	30	22	14.91	11.63	4.18	14.83	11.57	4.72	14.23	11.10	4.99	13.66	10.66	5.20	12.59	9.82	5.64
	32	24	15.58	12.63	4.31	15.50	12.57	4.86	14.87	12.06	5.14	14.28	11.57	5.35	13.16	10.67	5.81

Heating

Fan speed	Outdoor air temperature ℃		Indoor dry bulb temperature ℃									
			16		18		20		22		24	
			TC	PI	TC	PI	TC	PI	TC	PI	TC	PI
	DB	WB	kW	kW	kW	kW	kW	kW	kW	kW	kW	kW
Turbo	-10	-11	12.31	4.15	11.67	4.27	11.14	4.42	10.68	4.56	10.27	4.72
	-5	-5.6	12.96	4.03	12.28	4.14	11.73	4.29	11.25	4.43	10.81	4.58
	0	-0.7	14.08	4.09	13.35	4.20	12.75	4.35	12.22	4.50	11.75	4.65
	7	6	18.78	4.42	17.80	4.54	17.00	4.70	16.30	4.86	15.67	5.02
	10	8	19.72	4.55	18.69	4.68	17.85	4.84	17.11	5.00	16.46	5.17
H	-10	-11	11.98	4.13	11.35	4.25	10.84	4.39	10.40	4.54	10.00	4.69
	-5	-5.6	12.61	4.01	11.95	4.12	11.41	4.27	10.94	4.41	10.52	4.56
	0	-0.7	13.70	4.07	12.99	4.18	12.41	4.33	11.89	4.48	11.44	4.63
	7	6	18.27	4.40	17.32	4.52	16.54	4.68	15.86	4.83	15.25	5.00
	10	8	19.18	4.53	18.19	4.65	17.37	4.82	16.65	4.98	16.01	5.15
M	-10	-11	11.59	4.19	10.99	4.31	10.50	4.46	10.06	4.61	9.68	4.76
	-5	-5.6	12.20	4.07	11.57	4.18	11.05	4.33	10.59	4.48	10.19	4.63
	0	-0.7	13.26	4.13	12.57	4.25	12.01	4.40	11.51	4.54	11.07	4.69
	7	6	17.69	4.46	16.77	4.59	16.01	4.75	15.35	4.91	14.76	5.07
	10	8	18.57	4.60	17.60	4.72	16.81	4.89	16.12	5.05	15.50	5.22
L	-10	-11	11.01	4.32	10.44	4.44	9.97	4.60	9.56	4.75	9.19	4.91
	-5	-5.6	11.59	4.20	10.99	4.32	10.50	4.47	10.06	4.62	9.68	4.77
	0	-0.7	12.60	4.26	11.95	4.38	11.41	4.53	10.94	4.69	10.52	4.84
	7	6	16.80	4.60	15.93	4.73	15.21	4.90	14.58	5.06	14.02	5.23
	10	8	17.64	4.74	16.72	4.87	15.97	5.04	15.31	5.21	14.72	5.39

Symbols:
DB: Dry bulb temperature
WB: Wet bulb temperature
TC: Total cooling(heating) capacity
SHC: Sensible heat capacity
PI: Power input (compressor + indoor fan motor + outdoor fan motor)

1. The above data are based on the following conditions.

—	Power Supply	Equivalent Piping Length
Indoor	230V ~50Hz	Standard Piping Length

2. Capacities are net, including a deduction for cooling (an addition for heating) for indoor fan motor heat.

5.1.3 Floor Ceiling Type

ASF-12BI2

Cooling

Fan speed	Indoor air temperature ˚C		Outdoor dry bulb temperature ˚C														
			25			30			35			40			46		
			TC	SHC	PI	TC	SHC	PI	TC	SHC	PI	TC	SHC	PI	TC	SHC	PI
	DB	WB	kW	kW	kW	kW	kW	kW	kW	kW	kW	kW	kW	kW	kW	kW	kW
Turbo	20	14	3.24	2.86	0.66	3.27	2.89	0.80	3.10	2.74	0.85	2.98	2.63	0.88	2.73	2.41	0.96
	24	17	3.47	3.12	0.69	3.50	3.15	0.84	3.32	2.98	0.89	3.18	2.86	0.93	2.92	2.63	1.00
	26	18	3.64	3.31	0.71	3.68	3.35	0.87	3.48	3.17	0.92	3.34	3.04	0.95	3.07	2.79	1.03
	27	19	3.66	3.33	0.71	3.70	3.37	0.87	3.50	3.19	0.92	3.36	3.06	0.96	3.08	2.81	1.04
	30	22	3.84	3.53	0.74	3.88	3.57	0.90	3.68	3.38	0.95	3.53	3.25	0.99	3.24	2.98	1.07
	32	24	4.03	3.76	0.76	4.08	3.80	0.92	3.86	3.59	0.97	3.70	3.45	1.02	3.40	3.17	1.10
H	20	14	3.11	2.67	0.63	3.14	2.70	0.77	2.98	2.56	0.82	2.86	2.45	0.85	2.63	2.26	0.92
	23	16	3.33	2.92	0.67	3.36	2.95	0.81	3.18	2.80	0.86	3.06	2.68	0.89	2.82	2.47	0.97
	26	18	3.49	3.11	0.69	3.53	3.15	0.84	3.34	2.98	0.88	3.21	2.86	0.92	2.96	2.63	1.00
	27	19	3.51	3.14	0.69	3.55	3.17	0.84	3.36	3.00	0.89	3.23	2.88	0.92	2.97	2.66	1.00
	30	22	3.69	3.33	0.71	3.73	3.37	0.86	3.53	3.19	0.91	3.39	3.06	0.95	3.12	2.82	1.03
	32	24	3.87	3.55	0.73	3.91	3.59	0.89	3.70	3.40	0.94	3.56	3.26	0.98	3.28	3.01	1.06
M	20	14	2.96	2.47	0.61	2.99	2.50	0.74	2.83	2.36	0.78	2.71	2.27	0.81	2.50	2.09	0.88
	23	16	3.16	2.71	0.64	3.20	2.74	0.78	3.02	2.59	0.82	2.90	2.49	0.85	2.68	2.30	0.93
	26	18	3.32	2.90	0.65	3.36	2.93	0.80	3.18	2.77	0.84	3.05	2.66	0.88	2.81	2.45	0.95
	27	19	3.34	2.92	0.66	3.37	2.95	0.80	3.19	2.79	0.85	3.06	2.68	0.88	2.82	2.47	0.96
	30	22	3.50	3.11	0.68	3.54	3.14	0.83	3.35	2.97	0.87	3.22	2.85	0.91	2.97	2.63	0.99
	32	24	3.68	3.32	0.70	3.72	3.36	0.85	3.52	3.18	0.90	3.38	3.05	0.94	3.11	2.81	1.01
L	20	14	2.87	2.33	0.59	2.90	2.35	0.72	2.74	2.23	0.76	2.63	2.14	0.79	2.43	1.97	0.86
	23	16	3.07	2.57	0.62	3.10	2.60	0.76	2.93	2.46	0.80	2.82	2.36	0.83	2.60	2.18	0.90
	26	18	3.22	2.75	0.64	3.25	2.78	0.78	3.08	2.63	0.82	2.96	2.53	0.86	2.73	2.33	0.93
	27	19	3.24	2.78	0.64	3.27	2.81	0.78	3.10	2.66	0.83	2.97	2.55	0.86	2.74	2.35	0.93
	30	22	3.40	2.96	0.66	3.43	2.99	0.80	3.25	2.83	0.85	3.12	2.72	0.89	2.88	2.51	0.96
	32	24	3.57	3.17	0.68	3.61	3.21	0.83	3.41	3.04	0.88	3.28	2.92	0.91	3.02	2.69	0.99

Heating

Fan speed	Outdoor air temperature ˚C		Indoor dry bulb temperature ˚C									
			16		18		20		22		24	
			TC	PI	TC	PI	TC	PI	TC	PI	TC	PI
	DB	WB	kW	kW	kW	kW	kW	kW	kW	kW	kW	kW
Turbo	-10	-11	2.90	0.79	2.75	0.82	2.62	0.85	2.51	0.87	2.42	0.90
	-5	-5.6	3.05	0.77	2.89	0.79	2.76	0.82	2.65	0.85	2.54	0.88
	0	-0.7	3.31	0.78	3.14	0.81	3.00	0.83	2.88	0.86	2.77	0.89
	7	6	4.42	0.85	4.19	0.87	4.00	0.90	3.84	0.93	3.69	0.96
	10	8	4.64	0.87	4.40	0.90	4.20	0.93	4.03	0.96	3.87	0.99

Fan speed	Outdoor air temperature ˚C		Indoor dry bulb temperature ˚C									
			16		18		20		22		24	
			TC	PI	TC	PI	TC	PI	TC	PI	TC	PI
	DB	WB	kW	kW	kW	kW	kW	kW	kW	kW	kW	kW
H	-10	-11	2.82	0.79	2.67	0.81	2.55	0.84	2.45	0.87	2.35	0.90
	-5	-5.6	2.97	0.77	2.81	0.79	2.69	0.82	2.57	0.84	2.48	0.87
	0	-0.7	3.22	0.78	3.06	0.80	2.92	0.83	2.80	0.86	2.69	0.89
	7	6	4.30	0.84	4.08	0.87	3.89	0.90	3.73	0.93	3.59	0.96
	10	8	4.51	0.87	4.28	0.89	4.09	0.92	3.92	0.95	3.77	0.99
M	-10	-11	2.73	0.80	2.59	0.83	2.47	0.85	2.37	0.88	2.28	0.91
	-5	-5.6	2.87	0.78	2.72	0.80	2.60	0.83	2.49	0.86	2.40	0.89
	0	-0.7	3.12	0.79	2.96	0.81	2.83	0.84	2.71	0.87	2.60	0.90
	7	6	4.16	0.85	3.94	0.88	3.77	0.91	3.61	0.94	3.47	0.97
	10	8	4.37	0.88	4.14	0.90	3.96	0.94	3.79	0.97	3.65	1.00
L	-10	-11	2.59	0.83	2.46	0.85	2.35	0.88	2.25	0.91	2.16	0.94
	-5	-5.6	2.73	0.80	2.59	0.83	2.47	0.86	2.37	0.88	2.28	0.91
	0	-0.7	2.96	0.82	2.81	0.84	2.68	0.87	2.57	0.90	2.47	0.93
	7	6	3.95	0.88	3.75	0.91	3.58	0.94	3.43	0.97	3.30	1.00
	10	8	4.15	0.91	3.94	0.93	3.76	0.97	3.60	1.00	3.46	1.03

ASF-18BI2
Cooling

Fan speed	Indoor air temperature ˚C		Outdoor dry bulb temperature ˚C														
			25			30			35			40			46		
			TC	SHC	PI	TC	SHC	PI	TC	SHC	PI	TC	SHC	PI	TC	SHC	PI
	DB	WB	kW	kW	kW	kW	kW	kW	kW	kW	kW	kW	kW	kW	kW	kW	kW
Turbo	20	14	4.94	3.42	1.17	4.91	3.40	1.32	4.71	3.27	1.39	4.53	3.14	1.45	4.15	2.88	1.57
	24	17	5.24	3.83	1.22	5.21	3.81	1.38	5.00	3.66	1.46	4.80	3.51	1.52	4.40	3.22	1.65
	26	18	5.45	4.12	1.26	5.42	4.10	1.42	5.20	3.93	1.50	4.99	3.77	1.56	4.58	3.46	1.70
	27	19	5.55	4.25	1.27	5.52	4.23	1.43	5.30	4.06	1.51	5.09	3.90	1.57	4.67	3.58	1.71
	30	22	5.89	4.65	1.30	5.86	4.63	1.47	5.62	4.44	1.55	5.39	4.26	1.62	4.95	3.91	1.76
	32	24	6.15	5.04	1.34	6.12	5.01	1.51	5.87	4.81	1.60	5.64	4.62	1.67	5.17	4.24	1.81
H	20	14	4.74	3.19	1.13	4.72	3.17	1.27	4.52	3.04	1.34	4.34	2.92	1.40	4.00	2.69	1.52
	23	16	5.03	3.59	1.18	5.00	3.57	1.33	4.80	3.43	1.41	4.60	3.29	1.47	4.24	3.03	1.59
	26	18	5.23	3.87	1.22	5.20	3.85	1.37	4.99	3.69	1.45	4.79	3.55	1.51	4.41	3.27	1.64
	27	19	5.33	4.00	1.22	5.30	3.98	1.38	5.09	3.82	1.46	4.88	3.67	1.52	4.50	3.38	1.65
	30	22	5.65	4.39	1.26	5.62	4.37	1.42	5.39	4.19	1.50	5.18	4.02	1.56	4.77	3.71	1.69
	32	24	5.91	4.77	1.29	5.87	4.74	1.46	5.64	4.55	1.54	5.41	4.37	1.61	4.99	4.03	1.74
M	20	14	4.50	2.94	1.07	4.48	2.93	1.21	4.30	2.81	1.28	4.13	2.69	1.33	3.80	2.48	1.45
	23	16	4.77	3.33	1.13	4.75	3.31	1.27	4.56	3.18	1.34	4.37	3.05	1.40	4.03	2.81	1.52
	26	18	4.97	3.60	1.16	4.94	3.58	1.31	4.74	3.44	1.38	4.55	3.30	1.44	4.19	3.04	1.56
	27	19	5.07	3.73	1.17	5.04	3.71	1.32	4.83	3.56	1.39	4.64	3.41	1.45	4.28	3.15	1.57
	30	22	5.37	4.10	1.20	5.34	4.08	1.36	5.12	3.91	1.43	4.92	3.75	1.49	4.53	3.46	1.62
	32	24	5.61	4.47	1.24	5.58	4.44	1.40	5.35	4.26	1.47	5.14	4.09	1.54	4.74	3.77	1.67

Fan speed	Indoor air temperature ˚C		Outdoor dry bulb temperature ˚C														
			25			30			35			40			46		
			TC	SHC	PI	TC	SHC	PI	TC	SHC	PI	TC	SHC	PI	TC	SHC	PI
	DB	WB	kW	kW	kW	kW	kW	kW	kW	kW	kW	kW	kW	kW	kW	kW	kW
L	20	14	4.14	2.63	1.05	4.12	2.61	1.18	3.95	2.51	1.25	3.80	2.41	1.30	3.50	2.22	1.41
	23	16	4.39	2.99	1.10	4.37	2.97	1.24	4.19	2.85	1.31	4.02	2.74	1.37	3.71	2.52	1.48
	26	18	4.57	3.24	1.13	4.54	3.23	1.28	4.36	3.09	1.35	4.19	2.97	1.41	3.86	2.74	1.52
	27	19	4.66	3.36	1.14	4.64	3.34	1.28	4.45	3.21	1.36	4.27	3.08	1.41	3.94	2.84	1.53
	30	22	4.94	3.70	1.17	4.91	3.68	1.32	4.71	3.54	1.40	4.53	3.39	1.45	4.17	3.13	1.58
	32	24	5.16	4.05	1.20	5.13	4.03	1.36	4.93	3.87	1.44	4.73	3.71	1.50	4.36	3.42	1.62

Heating

Fan speed	Outdoor air temperature ˚C		Indoor dry bulb temperature ˚C									
			16		18		20		22		24	
			TC	PI	TC	PI	TC	PI	TC	PI	TC	PI
	DB	WB	kW	kW	kW	kW	kW	kW	kW	kW	kW	kW
Turbo	-10	-11	4.05	1.24	3.84	1.27	3.67	1.32	3.52	1.36	3.38	1.41
	-5	-5.6	4.27	1.20	4.05	1.23	3.86	1.28	3.70	1.32	3.56	1.36
	0	-0.7	4.64	1.22	4.40	1.25	4.20	1.30	4.03	1.34	3.87	1.38
	7	6	6.19	1.32	5.86	1.35	5.60	1.40	5.37	1.45	5.16	1.50
	10	8	6.49	1.36	6.16	1.39	5.88	1.44	5.64	1.49	5.42	1.54
H	-10	-11	3.95	1.23	3.74	1.26	3.57	1.31	3.42	1.35	3.29	1.40
	-5	-5.6	4.15	1.19	3.94	1.23	3.76	1.27	3.60	1.31	3.47	1.36
	0	-0.7	4.51	1.21	4.28	1.25	4.09	1.29	3.92	1.33	3.77	1.38
	7	6	6.02	1.31	5.71	1.35	5.45	1.39	5.22	1.44	5.02	1.49
	10	8	6.32	1.35	5.99	1.39	5.72	1.43	5.49	1.48	5.27	1.53
M	-10	-11	3.82	1.25	3.62	1.28	3.46	1.33	3.31	1.37	3.19	1.42
	-5	-5.6	4.02	1.21	3.81	1.25	3.64	1.29	3.49	1.33	3.36	1.38
	0	-0.7	4.37	1.23	4.14	1.26	3.96	1.31	3.79	1.35	3.65	1.40
	7	6	5.83	1.33	5.52	1.37	5.27	1.41	5.06	1.46	4.86	1.51
	10	8	6.12	1.37	5.80	1.41	5.54	1.46	5.31	1.51	5.11	1.56
L	-10	-11	3.63	1.29	3.44	1.32	3.28	1.37	3.15	1.42	3.03	1.46
	-5	-5.6	3.82	1.25	3.62	1.29	3.46	1.33	3.31	1.37	3.19	1.42
	0	-0.7	4.15	1.27	3.94	1.30	3.76	1.35	3.60	1.40	3.46	1.44
	7	6	5.53	1.37	5.25	1.41	5.01	1.46	4.80	1.51	4.62	1.56
	10	8	5.81	1.41	5.51	1.45	5.26	1.50	5.04	1.55	4.85	1.60

ASF-24BI2

Cooling

Fan speed	Indoor air temperature ˚C		Outdoor dry bulb temperature ˚C														
			25			30			35			40			46		
			TC	SHC	PI	TC	SHC	PI	TC	SHC	PI	TC	SHC	PI	TC	SHC	PI
	DB	WB	kW	kW	kW	kW	kW	kW	kW	kW	kW	kW	kW	kW	kW	kW	kW
Turbo	20	14	6.62	5.89	1.57	6.58	5.86	1.77	6.31	5.63	1.87	6.06	5.40	1.95	5.56	4.96	2.11
	24	17	7.01	6.35	1.65	6.98	6.31	1.86	6.69	6.06	1.96	6.43	5.81	2.04	5.90	5.33	2.22
	26	18	7.29	6.66	1.69	7.26	6.63	1.91	6.96	6.36	2.02	6.68	6.11	2.10	6.13	5.60	2.28
	27	19	7.44	6.82	1.70	7.40	6.79	1.92	7.10	6.51	2.03	6.82	6.25	2.11	6.25	5.73	2.29
	30	22	7.89	7.30	1.75	7.84	7.26	1.98	7.53	6.97	2.09	7.23	6.69	2.18	6.63	6.14	2.36
	32	24	8.24	7.71	1.80	8.20	7.67	2.04	7.86	7.36	2.15	7.55	7.07	2.24	6.93	6.48	2.43
H	20	14	6.35	5.51	1.51	6.32	5.48	1.71	6.06	5.25	1.80	5.82	5.04	1.88	5.36	4.65	2.04
	23	16	6.73	5.95	1.59	6.70	5.92	1.79	6.43	5.68	1.89	6.17	5.45	1.97	5.69	5.02	2.14
	26	18	7.00	6.26	1.63	6.97	6.23	1.84	6.68	5.98	1.95	6.42	5.74	2.03	5.91	5.29	2.20
	27	19	7.14	6.42	1.64	7.10	6.38	1.85	6.82	6.12	1.96	6.54	5.88	2.04	6.03	5.42	2.21
	30	22	7.57	6.88	1.69	7.53	6.85	1.91	7.22	6.57	2.02	6.94	6.31	2.10	6.39	5.81	2.28
	32	24	7.91	7.29	1.74	7.87	7.25	1.96	7.55	6.96	2.08	7.25	6.68	2.16	6.68	6.16	2.35
M	20	14	6.03	5.09	1.44	6.00	5.06	1.63	5.76	4.86	1.72	5.53	4.66	1.79	5.10	4.30	1.95
	23	16	6.40	5.52	1.52	6.36	5.49	1.71	6.10	5.27	1.81	5.86	5.06	1.88	5.40	4.66	2.04
	26	18	6.65	5.83	1.56	6.62	5.80	1.76	6.35	5.56	1.86	6.09	5.34	1.94	5.62	4.92	2.10
	27	19	6.79	5.98	1.57	6.75	5.94	1.77	6.48	5.70	1.87	6.22	5.47	1.95	5.73	5.05	2.11
	30	22	7.19	6.42	1.61	7.15	6.39	1.82	6.86	6.13	1.92	6.59	5.88	2.00	6.07	5.42	2.18
	32	24	7.52	6.82	1.66	7.48	6.79	1.88	7.17	6.51	1.98	6.89	6.25	2.06	6.35	5.76	2.24
L	20	14	5.55	4.55	1.41	5.52	4.53	1.59	5.30	4.34	1.68	5.09	4.17	1.75	4.69	3.84	1.90
	23	16	5.88	4.96	1.48	5.85	4.93	1.67	5.62	4.73	1.76	5.39	4.54	1.84	4.97	4.19	1.99
	26	18	6.12	5.25	1.52	6.09	5.22	1.72	5.84	5.01	1.81	5.61	4.81	1.89	5.17	4.43	2.05
	27	19	6.24	5.39	1.53	6.21	5.36	1.73	5.96	5.14	1.82	5.72	4.94	1.90	5.27	4.55	2.06
	30	22	6.62	5.80	1.57	6.58	5.77	1.78	6.31	5.54	1.88	6.06	5.32	1.95	5.59	4.90	2.12
	32	24	6.91	6.18	1.62	6.88	6.15	1.83	6.60	5.90	1.93	6.34	5.67	2.01	5.84	5.22	2.18

Heating

Fan speed	Outdoor air temperature ˚C		Indoor dry bulb temperature ˚C									
			16		18		20		22		24	
			TC	PI	TC	PI	TC	PI	TC	PI	TC	PI
	DB	WB	kW	kW	kW	kW	kW	kW	kW	kW	kW	kW
Turbo	-10	-11	5.58	1.68	5.29	1.72	5.05	1.79	4.84	1.85	4.65	1.91
	-5	-5.6	5.87	1.63	5.56	1.67	5.31	1.73	5.09	1.79	4.90	1.85
	0	-0.7	6.38	1.65	6.05	1.70	5.78	1.76	5.54	1.82	5.32	1.88
	7	6	8.51	1.79	8.06	1.84	7.70	1.90	7.38	1.96	7.10	2.03
	10	8	8.93	1.84	8.47	1.89	8.09	1.96	7.75	2.02	7.45	2.09
H	-10	-11	5.42	1.67	5.14	1.72	4.91	1.78	4.71	1.84	4.53	1.90
	-5	-5.6	5.71	1.62	5.41	1.67	5.17	1.72	4.96	1.78	4.77	1.84
	0	-0.7	6.21	1.65	5.88	1.69	5.62	1.75	5.39	1.81	5.18	1.87
	7	6	8.28	1.78	7.85	1.83	7.49	1.89	7.18	1.95	6.91	2.02
	10	8	8.69	1.83	8.24	1.88	7.87	1.95	7.54	2.01	7.25	2.08

Fan speed	Outdoor air temperature ˚C		Indoor dry bulb temperature ˚C									
			16		18		20		22		24	
			TC	PI	TC	PI	TC	PI	TC	PI	TC	PI
	DB	WB	kW	kW	kW	kW	kW	kW	kW	kW	kW	kW
M	-10	-11	5.25	1.69	4.98	1.74	4.75	1.80	4.56	1.86	4.38	1.93
	-5	-5.6	5.53	1.65	5.24	1.69	5.00	1.75	4.80	1.81	4.61	1.87
	0	-0.7	6.01	1.67	5.70	1.72	5.44	1.78	5.22	1.84	5.01	1.90
	7	6	8.01	1.80	7.59	1.85	7.25	1.92	6.95	1.98	6.69	2.05
	10	8	8.41	1.86	7.97	1.91	7.61	1.98	7.30	2.04	7.02	2.11
L	-10	-11	4.99	1.75	4.73	1.80	4.52	1.86	4.33	1.92	4.16	1.99
	-5	-5.6	5.25	1.70	4.98	1.74	4.75	1.81	4.56	1.87	4.38	1.93
	0	-0.7	5.71	1.72	5.41	1.77	5.17	1.83	4.95	1.89	4.76	1.96
	7	6	7.61	1.86	7.21	1.91	6.89	1.98	6.61	2.05	6.35	2.11
	10	8	7.99	1.92	7.58	1.97	7.23	2.04	6.94	2.11	6.67	2.18

ASF-30BI2
Cooling

Fan speed	Indoor air temperature ˚C		Outdoor dry bulb temperature ˚C													
			25			30			35			40			46		
			TC	SHC	PI	TC	SHC	PI	TC	SHC	PI	TC	SHC	PI	TC	SHC	PI
	DB	WB	kW	kW	kW	kW	kW	kW	kW	kW	kW	kW	kW	kW	kW	kW	kW
Turbo	20	14	7.92	6.66	1.93	7.88	6.63	2.18	7.56	6.36	2.30	7.26	6.10	2.40	6.66	5.60	2.60
	24	17	8.40	7.23	2.03	8.35	7.19	2.29	8.01	6.90	2.42	7.69	6.62	2.52	7.06	6.08	2.73
	26	18	8.73	7.63	2.09	8.69	7.59	2.35	8.33	7.28	2.49	8.00	6.99	2.59	7.34	6.42	2.81
	27	19	8.91	7.83	2.10	8.86	7.79	2.37	8.50	7.47	2.50	8.16	7.17	2.60	7.49	6.58	2.83
	30	22	9.44	8.42	2.16	9.39	8.37	2.44	9.01	8.03	2.57	8.65	7.71	2.68	7.94	7.07	2.91
	32	24	9.87	8.94	2.22	9.81	8.90	2.51	9.42	8.53	2.65	9.04	8.19	2.76	8.29	7.52	2.99
H	20	14	7.60	6.22	1.86	7.56	6.19	2.10	7.26	5.93	2.22	6.97	5.70	2.31	6.42	5.25	2.51
	23	16	8.06	6.78	1.95	8.02	6.74	2.21	7.69	6.47	2.33	7.39	6.21	2.43	6.81	5.72	2.63
	26	18	8.38	7.17	2.01	8.34	7.14	2.27	8.00	6.85	2.40	7.68	6.57	2.50	7.08	6.06	2.71
	27	19	8.55	7.36	2.02	8.51	7.33	2.28	8.16	7.03	2.41	7.83	6.75	2.51	7.22	6.22	2.73
	30	22	9.06	7.94	2.08	9.02	7.89	2.35	8.65	7.57	2.48	8.30	7.27	2.59	7.65	6.70	2.81
	32	24	9.47	8.46	2.14	9.42	8.41	2.42	9.04	8.07	2.56	8.68	7.75	2.66	8.00	7.14	2.89
M	20	14	7.22	5.74	1.78	7.19	5.71	2.01	6.89	5.48	2.12	6.62	5.26	2.21	6.10	4.85	2.40
	23	16	7.66	6.29	1.87	7.62	6.25	2.11	7.31	6.00	2.23	7.02	5.76	2.32	6.47	5.31	2.52
	26	18	7.96	6.67	1.92	7.92	6.64	2.17	7.60	6.37	2.29	7.30	6.11	2.39	6.73	5.63	2.59
	27	19	8.12	6.86	1.93	8.08	6.82	2.18	7.75	6.54	2.30	7.44	6.28	2.40	6.86	5.79	2.60
	30	22	8.61	7.41	1.99	8.57	7.37	2.24	8.22	7.07	2.37	7.89	6.79	2.47	7.27	6.25	2.68
	32	24	9.00	7.91	2.05	8.95	7.87	2.31	8.59	7.55	2.44	8.24	7.25	2.54	7.60	6.68	2.76

Fan speed	Indoor air temperature ˚C		Outdoor dry bulb temperature ˚C														
			25			30			35			40			46		
			TC	SHC	PI	TC	SHC	PI	TC	SHC	PI	TC	SHC	PI	TC	SHC	PI
	DB	WB	kW	kW	kW	kW	kW	kW	kW	kW	kW	kW	kW	kW	kW	kW	kW
L	20	14	6.65	5.14	1.73	6.61	5.11	1.96	6.34	4.90	2.07	6.09	4.71	2.15	5.61	4.34	2.34
	23	16	7.05	5.65	1.82	7.01	5.62	2.05	6.72	5.39	2.17	6.45	5.17	2.26	5.95	4.77	2.45
	26	18	7.33	6.01	1.87	7.29	5.98	2.11	6.99	5.73	2.23	6.71	5.51	2.33	6.19	5.07	2.52
	27	19	7.47	6.18	1.88	7.43	6.15	2.12	7.13	5.90	2.24	6.85	5.66	2.34	6.31	5.22	2.54
	30	22	7.92	6.69	1.94	7.88	6.66	2.19	7.56	6.39	2.31	7.26	6.13	2.41	6.69	5.65	2.61
	32	24	8.28	7.17	1.99	8.23	7.14	2.25	7.90	6.85	2.38	7.58	6.57	2.48	6.99	6.06	2.69

Heating

Fan speed	Outdoor air temperature ˚C		Indoor dry bulb temperature ˚C									
			16		18		20		22		24	
			TC	PI	TC	PI	TC	PI	TC	PI	TC	PI
	DB	WB	kW	kW	kW	kW	kW	kW	kW	kW	kW	kW
Turbo	-10	-11	6.37	1.99	6.04	2.04	5.77	2.11	5.53	2.18	5.32	2.26
	-5	-5.6	6.71	1.93	6.36	1.98	6.07	2.05	5.82	2.12	5.60	2.19
	0	-0.7	7.29	1.96	6.91	2.01	6.60	2.08	6.33	2.15	6.08	2.23
	7	6	9.72	2.11	9.21	2.17	8.80	2.25	8.44	2.33	8.11	2.40
	10	8	10.21	2.18	9.68	2.24	9.24	2.32	8.86	2.40	8.52	2.48
H	-10	-11	6.20	1.98	5.88	2.03	5.61	2.10	5.38	2.17	5.17	2.25
	-5	-5.6	6.53	1.92	6.19	1.97	5.91	2.04	5.66	2.11	5.45	2.18
	0	-0.7	7.09	1.95	6.72	2.00	6.42	2.07	6.16	2.14	5.92	2.21
	7	6	9.46	2.10	8.97	2.16	8.56	2.24	8.21	2.31	7.89	2.39
	10	8	9.93	2.17	9.41	2.23	8.99	2.31	8.62	2.38	8.29	2.46
M	-10	-11	6.00	2.01	5.69	2.06	5.43	2.14	5.21	2.21	5.01	2.28
	-5	-5.6	6.32	1.95	5.99	2.00	5.72	2.07	5.48	2.14	5.27	2.21
	0	-0.7	6.87	1.98	6.51	2.03	6.22	2.10	5.96	2.17	5.73	2.25
	7	6	9.16	2.14	8.68	2.20	8.29	2.27	7.95	2.35	7.64	2.43
	10	8	9.61	2.20	9.11	2.26	8.70	2.34	8.34	2.42	8.02	2.50
L	-10	-11	5.70	2.07	5.40	2.13	5.16	2.20	4.95	2.28	4.76	2.35
	-5	-5.6	6.00	2.01	5.69	2.07	5.43	2.14	5.21	2.21	5.01	2.28
	0	-0.7	6.52	2.04	6.18	2.10	5.91	2.17	5.66	2.24	5.44	2.32
	7	6	8.70	2.20	8.25	2.26	7.87	2.34	7.55	2.42	7.26	2.50
	10	8	9.13	2.27	8.66	2.33	8.27	2.41	7.93	2.49	7.62	2.58

ASF-36BI2

Cooling

Fan speed	Indoor air temperature ˚C		Outdoor dry bulb temperature ˚C														
			25			30			35			40			46		
			TC	SHC	PI	TC	SHC	PI	TC	SHC	PI	TC	SHC	PI	TC	SHC	PI
	DB	WB	kW	kW	kW	kW	kW	kW	kW	kW	kW	kW	kW	kW	kW	kW	kW
Turbo	20	14	9.79	7.37	2.27	9.73	7.34	2.56	9.34	7.04	2.71	8.96	6.76	2.82	8.23	6.20	3.06
	24	17	10.37	8.14	2.38	10.32	8.10	2.69	9.90	7.77	2.84	9.50	7.46	2.96	8.72	6.84	3.21
	26	18	10.79	8.68	2.45	10.73	8.64	2.77	10.29	8.28	2.93	9.88	7.95	3.05	9.07	7.30	3.31
	27	19	11.00	8.94	2.46	10.94	8.89	2.78	10.50	8.53	2.94	10.08	8.19	3.06	9.25	7.51	3.32
	30	22	11.66	9.70	2.54	11.60	9.65	2.86	11.13	9.26	3.03	10.69	8.89	3.15	9.80	8.16	3.42
	32	24	12.19	10.42	2.61	12.12	10.37	2.95	11.63	9.95	3.12	11.17	9.55	3.25	10.25	8.76	3.52
H	20	14	9.39	6.88	2.19	9.34	6.84	2.47	8.96	6.56	2.61	8.61	6.30	2.72	7.93	5.81	2.95
	23	16	9.96	7.63	2.30	9.90	7.59	2.60	9.50	7.28	2.74	9.12	6.99	2.86	8.41	6.44	3.10
	26	18	10.36	8.16	2.37	10.30	8.12	2.67	9.88	7.79	2.82	9.49	7.48	2.94	8.74	6.89	3.19
	27	19	10.56	8.41	2.38	10.51	8.37	2.68	10.08	8.03	2.84	9.68	7.70	2.95	8.92	7.10	3.21
	30	22	11.20	9.15	2.45	11.14	9.10	2.76	10.68	8.73	2.92	10.26	8.38	3.04	9.46	7.73	3.30
	32	24	11.70	9.86	2.52	11.64	9.81	2.85	11.17	9.41	3.01	10.72	9.03	3.13	9.88	8.33	3.40
M	20	14	8.92	6.35	2.09	8.88	6.32	2.36	8.52	6.06	2.50	8.18	5.82	2.60	7.54	5.36	2.82
	23	16	9.46	7.08	2.19	9.41	7.04	2.48	9.03	6.75	2.62	8.67	6.48	2.73	7.99	5.97	2.96
	26	18	9.84	7.59	2.26	9.79	7.55	2.55	9.39	7.24	2.69	9.01	6.95	2.81	8.31	6.41	3.05
	27	19	10.03	7.83	2.27	9.98	7.79	2.56	9.58	7.47	2.71	9.19	7.17	2.82	8.47	6.61	3.06
	30	22	10.64	8.54	2.34	10.58	8.50	2.64	10.15	8.15	2.79	9.75	7.83	2.90	8.98	7.21	3.15
	32	24	11.12	9.23	2.41	11.06	9.18	2.72	10.61	8.81	2.87	10.18	8.46	2.99	9.39	7.79	3.24
L	20	14	8.21	5.67	2.04	8.17	5.64	2.30	7.83	5.41	2.43	7.52	5.20	2.53	6.93	4.79	2.75
	23	16	8.70	6.35	2.14	8.66	6.32	2.42	8.30	6.06	2.55	7.97	5.82	2.66	7.35	5.36	2.88
	26	18	9.05	6.83	2.20	9.00	6.80	2.49	8.64	6.52	2.63	8.29	6.26	2.74	7.64	5.77	2.97
	27	19	9.23	7.06	2.21	9.18	7.02	2.50	8.81	6.74	2.64	8.46	6.47	2.75	7.80	5.96	2.98
	30	22	9.79	7.72	2.28	9.73	7.68	2.57	9.34	7.37	2.72	8.97	7.07	2.83	8.26	6.52	3.07
	32	24	10.23	8.37	2.35	10.17	8.32	2.65	9.76	7.99	2.80	9.37	7.67	2.91	8.64	7.07	3.16

Heating

Fan speed	Outdoor air temperature ˚C		Indoor dry bulb temperature ˚C									
			16		18		20		22		24	
			TC	PI	TC	PI	TC	PI	TC	PI	TC	PI
	DB	WB	kW	kW	kW	kW	kW	kW	kW	kW	kW	kW
Turbo	-10	-11	8.33	2.65	7.89	2.72	7.54	2.82	7.23	2.91	6.95	3.01
	-5	-5.6	8.76	2.57	8.31	2.64	7.94	2.74	7.61	2.83	7.32	2.92
	0	-0.7	9.53	2.61	9.03	2.68	8.63	2.78	8.27	2.87	7.95	2.97
	7	6	12.70	2.82	12.04	2.90	11.50	3.00	11.03	3.10	10.60	3.20
	10	8	13.34	2.90	12.64	2.99	12.08	3.09	11.58	3.19	11.13	3.30
H	-10	-11	8.10	2.64	7.68	2.71	7.33	2.80	7.03	2.90	6.76	3.00
	-5	-5.6	8.53	2.56	8.08	2.63	7.72	2.72	7.40	2.81	7.12	2.91
	0	-0.7	9.27	2.60	8.79	2.67	8.39	2.76	8.05	2.86	7.74	2.95
	7	6	12.36	2.81	11.72	2.88	11.19	2.99	10.73	3.09	10.32	3.19
	10	8	12.98	2.89	12.30	2.97	11.75	3.07	11.26	3.18	10.83	3.28

Fan speed	Outdoor air temperature ˚C		Indoor dry bulb temperature ˚C									
			16		18		20		22		24	
			TC	PI	TC	PI	TC	PI	TC	PI	TC	PI
	DB	WB	kW	kW	kW	kW	kW	kW	kW	kW	kW	kW
M	-10	-11	7.84	2.68	7.43	2.75	7.10	2.85	6.81	2.94	6.55	3.04
	-5	-5.6	8.26	2.60	7.83	2.67	7.47	2.76	7.17	2.86	6.89	2.95
	0	-0.7	8.97	2.64	8.51	2.71	8.12	2.81	7.79	2.90	7.49	3.00
	7	6	11.96	2.85	11.34	2.93	10.83	3.03	10.38	3.13	9.99	3.24
	10	8	12.56	2.93	11.91	3.02	11.37	3.12	10.90	3.23	10.48	3.33
L	-10	-11	7.45	2.76	7.06	2.84	6.75	2.94	6.47	3.03	6.22	3.14
	-5	-5.6	7.84	2.68	7.43	2.75	7.10	2.85	6.81	2.95	6.55	3.04
	0	-0.7	8.52	2.72	8.08	2.80	7.72	2.89	7.40	2.99	7.11	3.09
	7	6	11.37	2.94	10.77	3.02	10.29	3.13	9.87	3.23	9.49	3.34
	10	8	11.93	3.03	11.31	3.11	10.80	3.22	10.36	3.33	9.96	3.44

ASF-42BI2
Cooling

Fan speed	Indoor air temperature ˚C		Outdoor dry bulb temperature ˚C														
			25			30			35			40			46		
			TC	SHC	PI	TC	SHC	PI	TC	SHC	PI	TC	SHC	PI	TC	SHC	PI
	DB	WB	kW	kW	kW	kW	kW	kW	kW	kW	kW	kW	kW	kW	kW	kW	kW
Turbo	20	14	11.28	8.11	2.83	11.22	8.06	3.20	10.76	7.74	3.38	10.33	7.43	3.52	9.48	6.81	3.82
	24	17	11.95	9.02	2.97	11.89	8.97	3.36	11.41	8.61	3.55	10.95	8.26	3.69	10.05	7.58	4.01
	26	18	12.43	9.66	3.06	12.37	9.61	3.46	11.86	9.22	3.65	11.39	8.85	3.80	10.45	8.12	4.13
	27	19	12.68	9.97	3.08	12.61	9.91	3.47	12.10	9.51	3.67	11.62	9.13	3.82	10.66	8.38	4.15
	30	22	13.44	10.86	3.17	13.37	10.80	3.58	12.83	10.37	3.78	12.31	9.95	3.94	11.30	9.13	4.27
	32	24	14.05	11.72	3.26	13.97	11.66	3.68	13.40	11.19	3.89	12.87	10.74	4.05	11.81	9.86	4.39
H	20	14	10.83	7.56	2.74	10.77	7.52	3.09	10.33	7.21	3.26	9.92	6.93	3.40	9.14	6.38	3.69
	23	16	11.47	8.45	2.87	11.41	8.41	3.24	10.95	8.06	3.42	10.51	7.74	3.56	9.69	7.14	3.87
	26	18	11.93	9.08	2.95	11.87	9.03	3.33	11.39	8.67	3.52	10.93	8.32	3.67	10.08	7.67	3.98
	27	19	12.17	9.38	2.97	12.11	9.33	3.35	11.62	8.95	3.54	11.15	8.59	3.69	10.28	7.92	4.00
	30	22	12.90	10.25	3.06	12.83	10.19	3.45	12.31	9.78	3.64	11.82	9.39	3.80	10.90	8.65	4.12
	32	24	13.48	11.09	3.15	13.41	11.03	3.55	12.87	10.59	3.75	12.35	10.16	3.91	11.39	9.37	4.24
M	20	14	10.28	6.97	2.61	10.23	6.94	2.95	9.81	6.65	3.11	9.42	6.39	3.24	8.68	5.89	3.52
	23	16	10.90	7.84	2.74	10.84	7.79	3.09	10.40	7.48	3.27	9.99	7.18	3.40	9.21	6.62	3.69
	26	18	11.34	8.45	2.82	11.28	8.40	3.18	10.82	8.06	3.36	10.39	7.74	3.50	9.57	7.13	3.80
	27	19	11.56	8.73	2.83	11.50	8.68	3.20	11.04	8.33	3.38	10.59	8.00	3.52	9.77	7.37	3.82
	30	22	12.26	9.56	2.92	12.19	9.51	3.29	11.70	9.13	3.48	11.23	8.76	3.62	10.35	8.08	3.93
	32	24	12.81	10.39	3.00	12.74	10.33	3.39	12.22	9.91	3.58	11.74	9.51	3.73	10.82	8.77	4.05
L	20	14	9.46	6.23	2.55	9.41	6.20	2.87	9.03	5.94	3.04	8.67	5.71	3.16	7.99	5.26	3.43
	23	16	10.03	7.04	2.67	9.98	7.00	3.02	9.57	6.71	3.19	9.19	6.45	3.32	8.47	5.94	3.60
	26	18	10.43	7.61	2.75	10.38	7.57	3.10	9.95	7.26	3.28	9.56	6.97	3.42	8.81	6.42	3.71
	27	19	10.64	7.87	2.76	10.58	7.83	3.12	10.15	7.51	3.30	9.75	7.21	3.43	8.98	6.65	3.72
	30	22	11.28	8.65	2.84	11.22	8.60	3.21	10.76	8.25	3.39	10.33	7.92	3.53	9.52	7.30	3.83
	32	24	11.78	9.42	2.93	11.72	9.37	3.31	11.25	8.99	3.49	10.80	8.63	3.64	9.95	7.95	3.95

Heating

Fan speed	Outdoor air temperature ˚C		Indoor dry bulb temperature ˚C									
			16		18		20		22		24	
			TC	PI	TC	PI	TC	PI	TC	PI	TC	PI
	DB	WB	kW	kW	kW	kW	kW	kW	kW	kW	kW	kW
Turbo	-10	-11	9.77	3.36	9.27	3.45	8.85	3.57	8.48	3.69	8.16	3.81
	-5	-5.6	10.29	3.26	9.75	3.35	9.32	3.47	8.93	3.58	8.59	3.70
	0	-0.7	11.18	3.31	10.60	3.40	10.13	3.52	9.71	3.64	9.33	3.76
	7	6	14.91	3.57	14.14	3.67	13.50	3.80	12.94	3.93	12.45	4.06
	10	8	15.66	3.68	14.84	3.78	14.18	3.91	13.59	4.05	13.07	4.18
H	-10	-11	9.51	3.34	9.02	3.43	8.61	3.55	8.26	3.67	7.94	3.79
	-5	-5.6	10.01	3.24	9.49	3.33	9.06	3.45	8.69	3.56	8.36	3.68
	0	-0.7	10.88	3.29	10.32	3.38	9.85	3.50	9.45	3.62	9.08	3.74
	7	6	14.51	3.55	13.75	3.65	13.14	3.78	12.59	3.91	12.11	4.04
	10	8	15.23	3.66	14.44	3.76	13.79	3.89	13.22	4.02	12.72	4.16
M	-10	-11	9.21	3.39	8.73	3.48	8.33	3.61	7.99	3.73	7.68	3.85
	-5	-5.6	9.69	3.29	9.19	3.38	8.77	3.50	8.41	3.62	8.09	3.74
	0	-0.7	10.53	3.34	9.99	3.43	9.54	3.55	9.14	3.67	8.79	3.80
	7	6	14.04	3.61	13.31	3.71	12.72	3.84	12.19	3.97	11.72	4.10
	10	8	14.75	3.72	13.98	3.82	13.35	3.95	12.80	4.09	12.31	4.22
L	-10	-11	8.75	3.50	8.29	3.59	7.92	3.72	7.59	3.84	7.30	3.97
	-5	-5.6	9.21	3.39	8.73	3.49	8.33	3.61	7.99	3.73	7.68	3.86
	0	-0.7	10.01	3.44	9.49	3.54	9.06	3.67	8.69	3.79	8.35	3.91
	7	6	13.34	3.72	12.65	3.82	12.08	3.96	11.58	4.09	11.14	4.23
	10	8	14.01	3.83	13.28	3.94	12.68	4.08	12.16	4.21	11.69	4.35

ASF-48BI2
Cooling

Fan speed	Indoor air temperature ˚C		Outdoor dry bulb temperature ˚C														
			25			30			35			40			46		
			TC	SHC	PI	TC	SHC	PI	TC	SHC	PI	TC	SHC	PI	TC	SHC	PI
	DB	WB	kW	kW	kW	kW	kW	kW	kW	kW	kW	kW	kW	kW	kW	kW	kW
Turbo	20	14	12.49	9.99	3.32	12.42	9.94	3.75	11.92	9.53	3.96	11.44	9.15	4.13	10.50	8.40	4.48
	24	17	13.24	10.93	3.48	13.17	10.87	3.93	12.63	10.43	4.16	12.13	10.01	4.33	11.13	9.18	4.70
	26	18	13.77	11.59	3.59	13.69	11.52	4.05	13.14	11.06	4.28	12.61	10.61	4.46	11.57	9.74	4.84
	27	19	14.04	11.90	3.60	13.97	11.84	4.07	13.40	11.36	4.30	12.86	10.91	4.48	11.80	10.01	4.86
	30	22	14.88	12.85	3.71	14.81	12.79	4.19	14.20	12.27	4.43	13.64	11.78	4.61	12.51	10.80	5.00
	32	24	15.55	13.73	3.82	15.47	13.65	4.31	14.84	13.10	4.56	14.25	12.58	4.75	13.07	11.54	5.15
H	20	14	11.99	9.33	3.20	11.93	9.28	3.62	11.44	8.90	3.82	10.98	8.54	3.98	10.12	7.87	4.32
	23	16	12.71	10.24	3.36	12.64	10.19	3.80	12.13	9.77	4.01	11.64	9.38	4.18	10.73	8.65	4.53
	26	18	13.22	10.89	3.46	13.15	10.83	3.91	12.61	10.39	4.13	12.11	9.98	4.30	11.16	9.20	4.66
	27	19	13.48	11.20	3.48	13.41	11.14	3.93	12.86	10.69	4.15	12.35	10.26	4.32	11.38	9.46	4.69
	30	22	14.29	12.12	3.58	14.21	12.06	4.04	13.64	11.57	4.27	13.09	11.11	4.45	12.07	10.24	4.83
	32	24	14.93	12.98	3.69	14.85	12.91	4.16	14.25	12.39	4.40	13.68	11.89	4.58	12.61	10.96	4.97

Fan speed	Indoor air temperature ˚C		Outdoor dry bulb temperature ˚C														
			25			30			35			40			46		
			TC	SHC	PI	TC	SHC	PI	TC	SHC	PI	TC	SHC	PI	TC	SHC	PI
	DB	WB	kW	kW	kW	kW	kW	kW	kW	kW	kW	kW	kW	kW	kW	kW	kW
M	20	14	11.39	8.61	3.06	11.33	8.56	3.45	10.87	8.22	3.65	10.43	7.89	3.80	9.62	7.27	4.12
	23	16	12.07	9.50	3.21	12.01	9.45	3.62	11.52	9.07	3.83	11.06	8.70	3.99	10.19	8.02	4.33
	26	18	12.56	10.13	3.30	12.49	10.07	3.73	11.98	9.67	3.94	11.50	9.28	4.11	10.60	8.55	4.45
	27	19	12.81	10.43	3.32	12.74	10.37	3.75	12.22	9.95	3.96	11.73	9.55	4.13	10.81	8.80	4.48
	30	22	13.57	11.31	3.42	13.50	11.25	3.86	12.95	10.80	4.08	12.44	10.37	4.25	11.46	9.55	4.61
	32	24	14.19	12.15	3.52	14.11	12.09	3.97	13.54	11.60	4.20	13.00	11.13	4.37	11.98	10.26	4.74
L	20	14	10.48	7.70	2.98	10.42	7.66	3.37	10.00	7.35	3.56	9.60	7.05	3.71	8.85	6.50	4.02
	23	16	11.11	8.53	3.13	11.05	8.49	3.53	10.60	8.14	3.73	10.18	7.82	3.89	9.38	7.20	4.22
	26	18	11.55	9.12	3.22	11.49	9.07	3.64	11.02	8.71	3.84	10.58	8.36	4.00	9.75	7.70	4.34
	27	19	11.78	9.40	3.24	11.72	9.35	3.65	11.24	8.97	3.86	10.79	8.61	4.02	9.95	7.94	4.36
	30	22	12.49	10.23	3.33	12.42	10.17	3.76	11.92	9.76	3.97	11.44	9.37	4.14	10.55	8.64	4.49
	32	24	13.05	11.01	3.43	12.98	10.96	3.87	12.45	10.51	4.09	11.96	10.09	4.26	11.02	9.30	4.62

Heating

Fan speed	Outdoor air temperature ˚C		Indoor dry bulb temperature ˚C									
			16		18		20		22		24	
			TC	PI	TC	PI	TC	PI	TC	PI	TC	PI
	DB	WB	kW	kW	kW	kW	kW	kW	kW	kW	kW	kW
Turbo	-10	-11	11.22	3.71	10.64	3.81	10.16	3.95	9.74	4.08	9.37	4.22
	-5	-5.6	11.81	3.60	11.20	3.70	10.70	3.83	10.25	3.96	9.86	4.09
	0	-0.7	12.84	3.66	12.17	3.76	11.63	3.89	11.15	4.02	10.72	4.15
	7	6	17.12	3.95	16.23	4.06	15.50	4.20	14.86	4.34	14.29	4.49
	10	8	17.98	4.07	17.04	4.18	16.28	4.33	15.60	4.47	15.00	4.62
H	-10	-11	10.92	3.69	10.35	3.79	9.89	3.93	9.48	4.06	9.11	4.19
	-5	-5.6	11.49	3.58	10.90	3.68	10.41	3.81	9.98	3.94	9.59	4.07
	0	-0.7	12.49	3.64	11.84	3.74	11.31	3.87	10.84	4.00	10.43	4.13
	7	6	16.66	3.93	15.79	4.04	15.08	4.18	14.46	4.32	13.90	4.46
	10	8	17.49	4.05	16.58	4.16	15.84	4.30	15.18	4.45	14.60	4.60
M	-10	-11	10.57	3.75	10.02	3.85	9.57	3.99	9.18	4.12	8.82	4.26
	-5	-5.6	11.13	3.64	10.55	3.74	10.07	3.87	9.66	4.00	9.29	4.13
	0	-0.7	12.09	3.69	11.47	3.79	10.95	3.93	10.50	4.06	10.09	4.20
	7	6	16.13	3.99	15.29	4.10	14.60	4.24	14.00	4.38	13.46	4.53
	10	8	16.93	4.11	16.05	4.22	15.33	4.37	14.70	4.52	14.13	4.67
L	-10	-11	10.04	3.86	9.52	3.97	9.09	4.11	8.72	4.25	8.38	4.39
	-5	-5.6	10.57	3.75	10.02	3.86	9.57	3.99	9.18	4.12	8.82	4.26
	0	-0.7	11.49	3.81	10.89	3.91	10.40	4.05	9.97	4.19	9.59	4.33
	7	6	15.32	4.11	14.52	4.23	13.87	4.38	13.30	4.52	12.79	4.67
	10	8	16.09	4.24	15.25	4.35	14.56	4.51	13.96	4.66	13.43	4.81

ASF-60BI2

Cooling

Fan speed	Indoor air temperature ˚C		Outdoor dry bulb temperature ˚C														
			25			30			35			40			46		
			TC	SHC	PI	TC	SHC	PI	TC	SHC	PI	TC	SHC	PI	TC	SHC	PI
	DB	WB	kW	kW	kW	kW	kW	kW	kW	kW	kW	kW	kW	kW	kW	kW	kW
Turbo	20	14	14.91	9.62	4.09	14.83	9.57	4.62	14.23	9.18	4.88	13.66	8.82	5.09	12.53	8.09	5.52
	24	17	15.81	10.91	4.29	15.72	10.85	4.85	15.08	10.41	5.12	14.48	10.00	5.34	13.29	9.17	5.79
	26	18	16.44	11.82	4.42	16.35	11.76	4.99	15.69	11.28	5.27	15.06	10.83	5.49	13.82	9.94	5.96
	27	19	16.77	12.24	4.44	16.68	12.17	5.02	16.00	11.68	5.30	15.36	11.21	5.52	14.09	10.29	5.99
	30	22	17.77	13.47	4.57	17.68	13.40	5.16	16.96	12.86	5.46	16.28	12.34	5.68	14.94	11.32	6.17
	32	24	18.57	14.70	4.71	18.47	14.62	5.32	17.72	14.03	5.62	17.02	13.47	5.85	15.61	12.36	6.35
H	20	14	14.31	8.97	3.95	14.24	8.92	4.46	13.66	8.56	4.71	13.11	8.21	4.91	12.09	7.57	5.32
	23	16	15.17	10.22	4.14	15.09	10.17	4.68	14.48	9.75	4.94	13.90	9.36	5.15	12.81	8.63	5.59
	26	18	15.78	11.11	4.27	15.70	11.05	4.82	15.06	10.60	5.09	14.46	10.18	5.30	13.33	9.38	5.75
	27	19	16.10	11.52	4.29	16.01	11.45	4.84	15.36	10.99	5.11	14.75	10.55	5.33	13.59	9.72	5.78
	30	22	17.06	12.71	4.41	16.97	12.64	4.98	16.28	12.13	5.26	15.63	11.64	5.48	14.41	10.73	5.95
	32	24	17.83	13.91	4.54	17.74	13.84	5.13	17.01	13.28	5.42	16.33	12.75	5.64	15.06	11.75	6.12
M	20	14	13.60	8.26	3.77	13.53	8.22	4.26	12.98	7.88	4.50	12.46	7.57	4.69	11.48	6.98	5.08
	23	16	14.41	9.47	3.96	14.34	9.42	4.47	13.76	9.04	4.72	13.21	8.68	4.92	12.17	8.00	5.33
	26	18	14.99	10.33	4.07	14.91	10.27	4.60	14.31	9.86	4.86	13.73	9.46	5.06	12.66	8.72	5.49
	27	19	15.29	10.72	4.09	15.21	10.66	4.62	14.59	10.23	4.88	14.01	9.82	5.09	12.91	9.05	5.52
	30	22	16.21	11.87	4.21	16.12	11.80	4.76	15.47	11.32	5.03	14.85	10.87	5.23	13.69	10.02	5.68
	32	24	16.94	13.03	4.34	16.85	12.96	4.90	16.16	12.43	5.17	15.52	11.94	5.39	14.30	11.00	5.85
L	20	14	12.51	7.37	3.68	12.44	7.33	4.15	11.94	7.03	4.39	11.46	6.75	4.57	10.56	6.22	4.96
	23	16	13.26	8.50	3.86	13.19	8.46	4.35	12.66	8.11	4.60	12.15	7.79	4.79	11.20	7.18	5.20
	26	18	13.79	9.30	3.97	13.72	9.25	4.48	13.16	8.88	4.74	12.64	8.52	4.93	11.65	7.85	5.35
	27	19	14.07	9.67	3.99	13.99	9.61	4.50	13.42	9.22	4.76	12.89	8.86	4.96	11.88	8.16	5.38
	30	22	14.91	10.73	4.11	14.83	10.67	4.64	14.23	10.24	4.90	13.66	9.83	5.10	12.59	9.06	5.54
	32	24	15.58	11.82	4.23	15.50	11.76	4.77	14.87	11.28	5.04	14.28	10.83	5.25	13.16	9.98	5.70

Heating

Fan speed	Outdoor air temperature ˚C		Indoor dry bulb temperature ˚C									
			16		18		20		22		24	
			TC	PI	TC	PI	TC	PI	TC	PI	TC	PI
	DB	WB	kW	kW	kW	kW	kW	kW	kW	kW	kW	kW
Turbo	-10	-11	12.31	4.24	11.67	4.36	11.14	4.51	10.68	4.66	10.27	4.82
	-5	-5.6	12.96	4.12	12.28	4.23	11.73	4.38	11.25	4.53	10.81	4.68
	0	-0.7	14.08	4.18	13.35	4.29	12.75	4.44	12.22	4.59	11.75	4.75
	7	6	18.78	4.51	17.80	4.64	17.00	4.80	16.30	4.96	15.67	5.13
	10	8	19.72	4.65	18.69	4.78	17.85	4.94	17.11	5.11	16.46	5.28
H	-10	-11	11.98	4.22	11.35	4.34	10.84	4.49	10.40	4.64	10.00	4.79
	-5	-5.6	12.61	4.09	11.95	4.21	11.41	4.36	10.94	4.50	10.52	4.65
	0	-0.7	13.70	4.16	12.99	4.27	12.41	4.42	11.89	4.57	11.44	4.72
	7	6	18.27	4.49	17.32	4.61	16.54	4.78	15.86	4.94	15.25	5.10
	10	8	19.18	4.62	18.19	4.75	17.37	4.92	16.65	5.08	16.01	5.25

Fan speed	Outdoor air temperature ˚C		Indoor dry bulb temperature ˚C									
			16		18		20		22		24	
			TC	PI	TC	PI	TC	PI	TC	PI	TC	PI
	DB	WB	kW	kW	kW	kW	kW	kW	kW	kW	kW	kW
M	-10	-11	11.59	4.28	10.99	4.40	10.50	4.56	10.06	4.71	9.68	4.87
	-5	-5.6	12.20	4.16	11.57	4.27	11.05	4.42	10.59	4.57	10.19	4.72
	0	-0.7	13.26	4.22	12.57	4.34	12.01	4.49	11.51	4.64	11.07	4.79
	7	6	17.69	4.56	16.77	4.68	16.01	4.85	15.35	5.01	14.76	5.18
	10	8	18.57	4.69	17.60	4.82	16.81	4.99	16.12	5.16	15.50	5.33
L	-10	-11	11.01	4.42	10.44	4.54	9.97	4.70	9.56	4.86	9.19	5.02
	-5	-5.6	11.59	4.29	10.99	4.41	10.50	4.56	10.06	4.71	9.68	4.87
	0	-0.7	12.60	4.35	11.95	4.47	11.41	4.63	10.94	4.78	10.52	4.95
	7	6	16.80	4.70	15.93	4.83	15.21	5.00	14.58	5.17	14.02	5.34
	10	8	17.64	4.84	16.72	4.98	15.97	5.15	15.31	5.32	14.72	5.50

Symbols:
DB: Dry bulb temperature
WB: Wet bulb temperature
TC: Total cooling(heating) capacity
SHC: Sensible heat capacity
PI: Power input (compressor + indoor fan motor + outdoor fan motor)

1. The above data are based on the following conditions.

—	Power Supply	Equivalent Piping Length
Indoor	230V ~50Hz	Standard Piping Length

2. Capacities are net, including a deduction for cooling (an addition for heating) for indoor fan motor heat.

5.2 Pipe Length Drop Capacity Correction

ASC-12BI2

Cooling

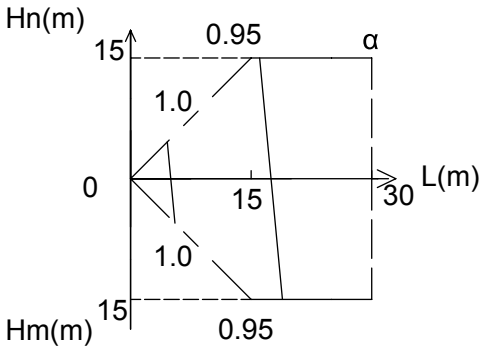

Heating

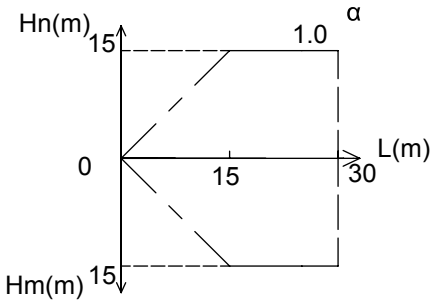

ASC-18BI2
ASC-24BI2

Cooling

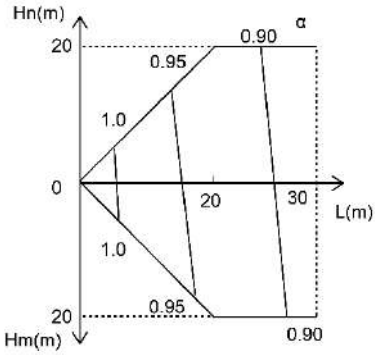

Heating

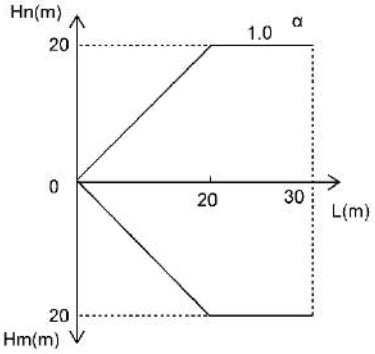

ASC-30BI2

Cooling

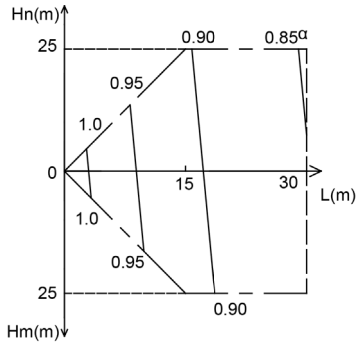

Heating

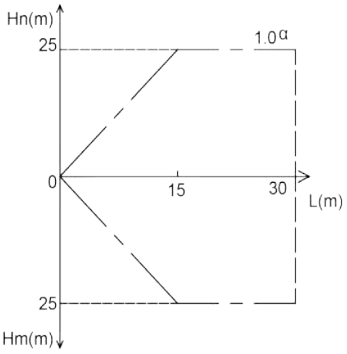

ASC-36BI2; ASD-36BI2; ASF-36BI2
ASC-42BI2; ASD-42BI2; ASF-42BI2
ASC-48BI2; ASD-48BI2; ASF-48BI2
ASC-60BI2; ASD-60BI2; ASF-60BI2

Cooling

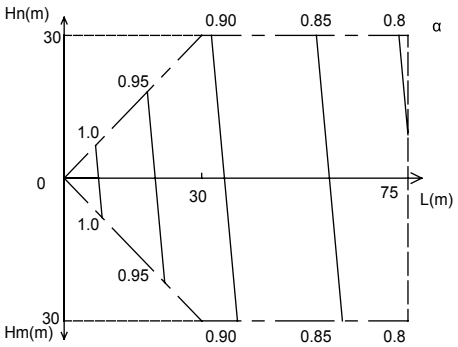

Heating

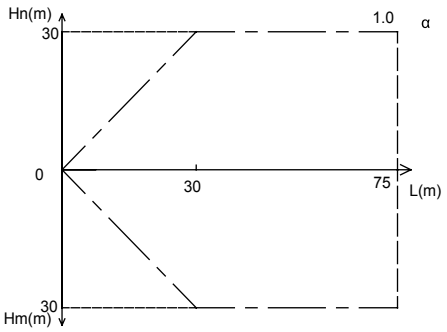

Symbols:
L：Length of connection pipe
Hn：Vertical rise (ODU below IDU)
Hm：Vertical drop (ODU above IDU)
α：Capacity correction factor

Notes:
1. Above figures indicate the capacity change rate of a standard indoor unit system under maximum load in standard conditions.
2. Under partial load, the capacity change rate indicated above will have a very small deviation.
3. Capacity calculation method for cooling/heating

Cooling/heating capacity = the corresponding capacity in the table of cooling/heating performance × Capacity correction factor

6 AIR VOLUME STATIC PRESSURE CURVE

6.1 Common Duct Type

ASD-12BI2

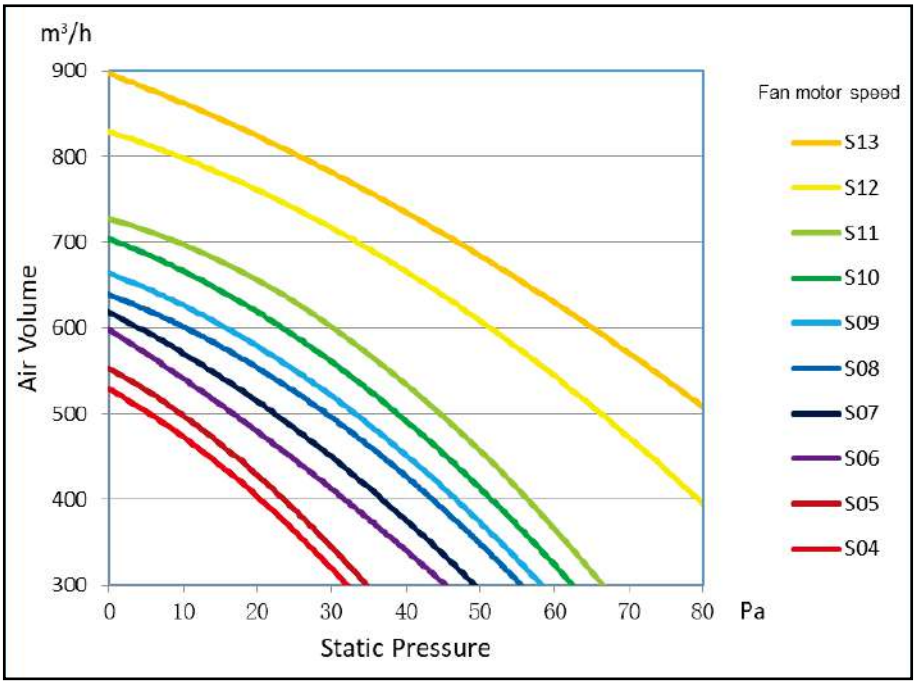

ASD-18BI2

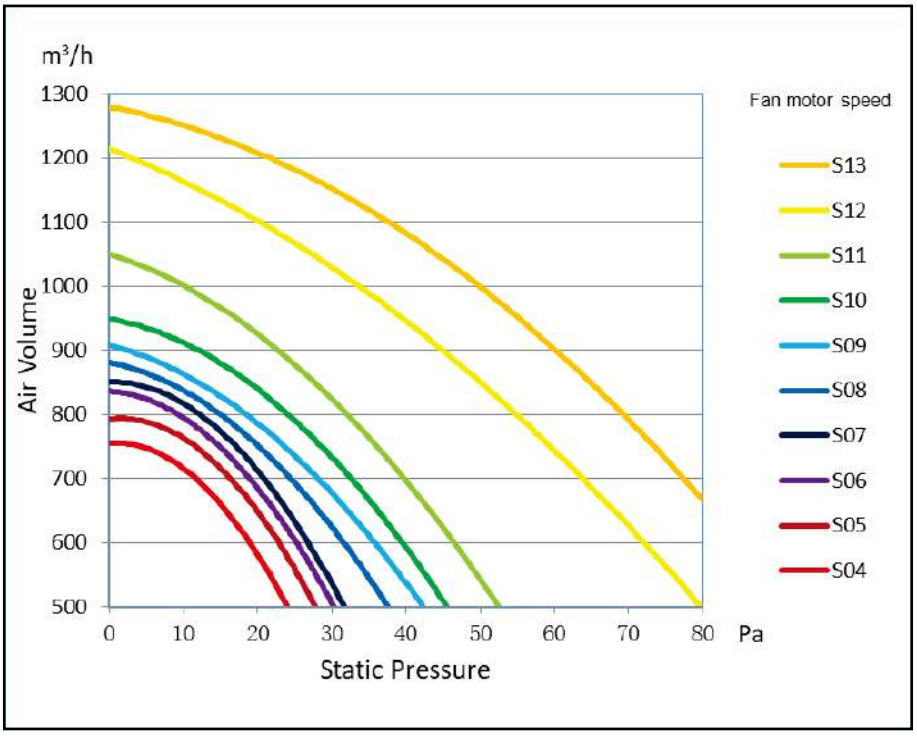

Notes:

1. The external static pressure (ESP) can be changed in 5 levels by the remote controller.
2. The default ESP mode setting is P05 which is the rated ESP.
3. The remote controller can be used to change turbo, H, M and L.

Static pressure selection	Super high speed	High speed	Medium speed	Low speed
P03	S09	S08	S06	S04
P04	S10	S09	S07	S05
P05	S11	S10	S08	S06
P06	S12	S11	S09	S07
P07	S13	S12	S10	S08

6.2 High Static Pressure Duct Type

ASD-24BI2

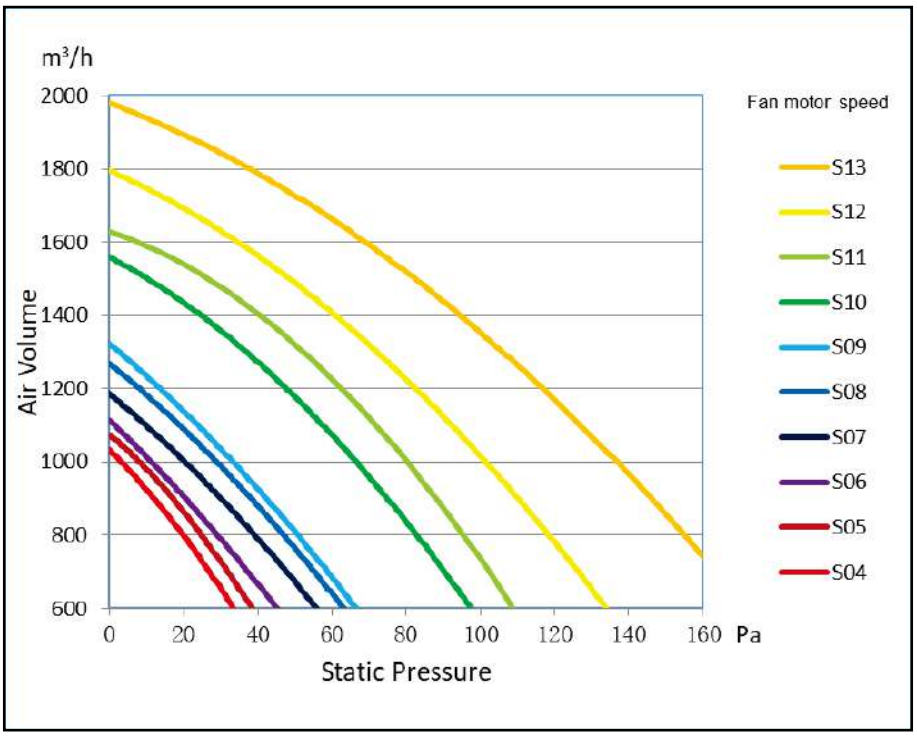

ASD-30BI2

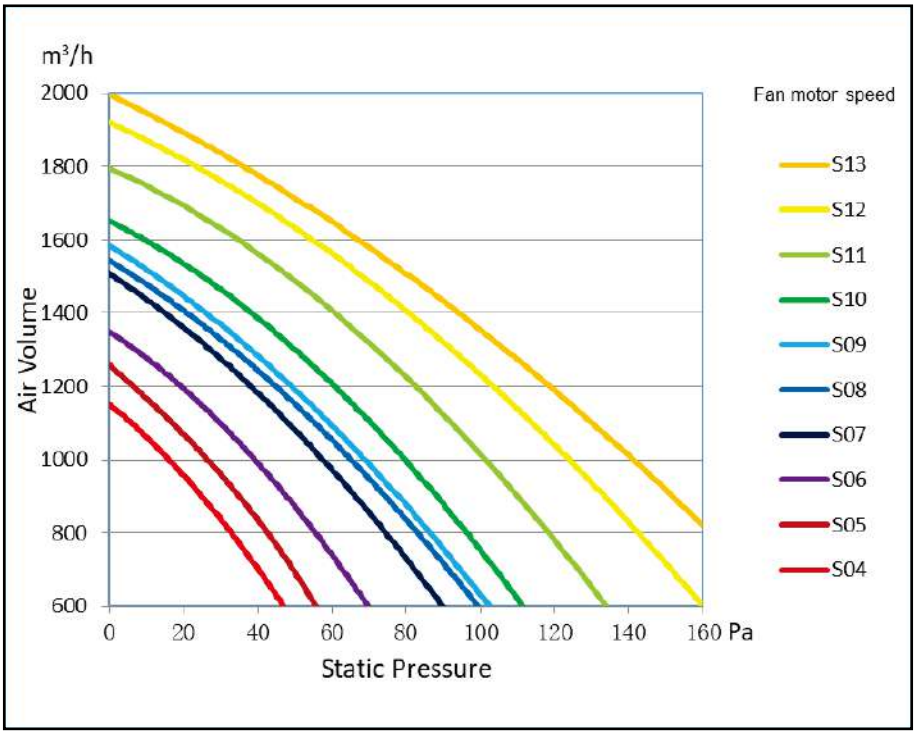

ASD-36BI2

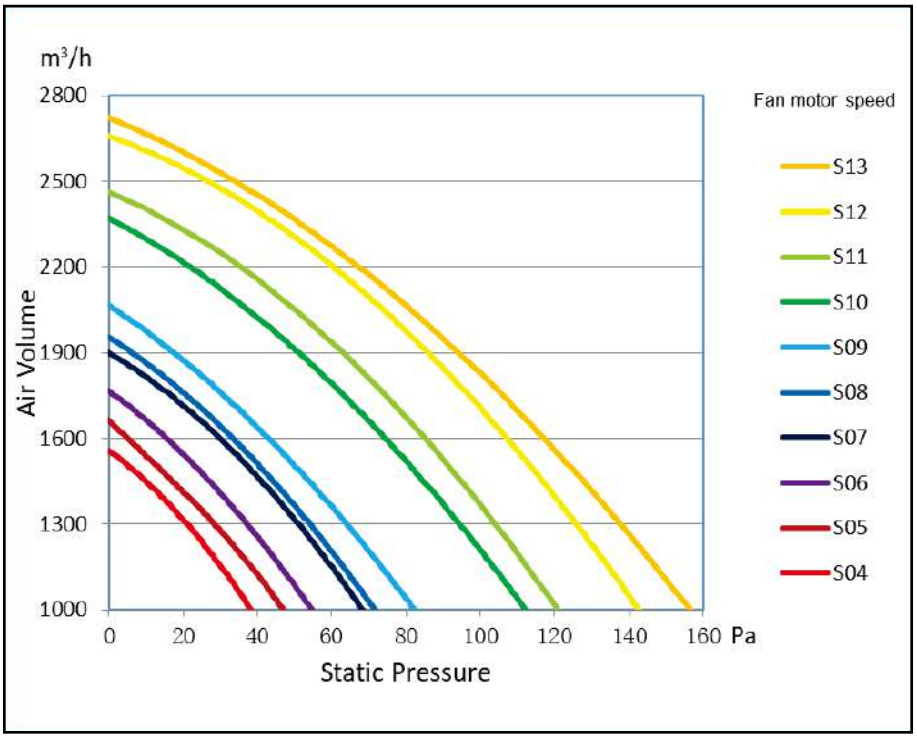

ASD-42BI2

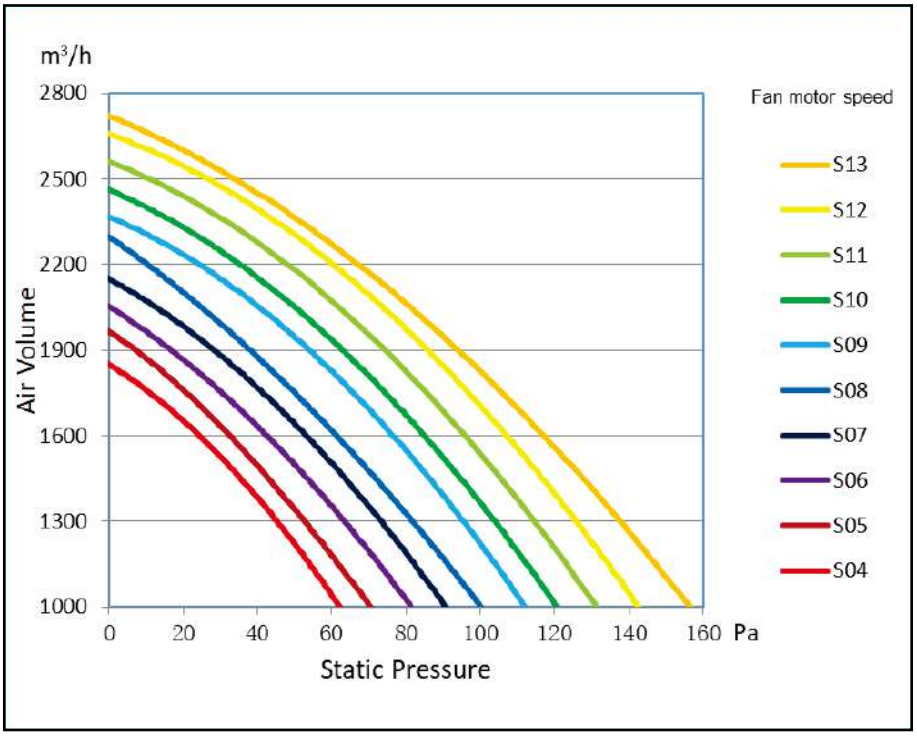

ASD-48BI2

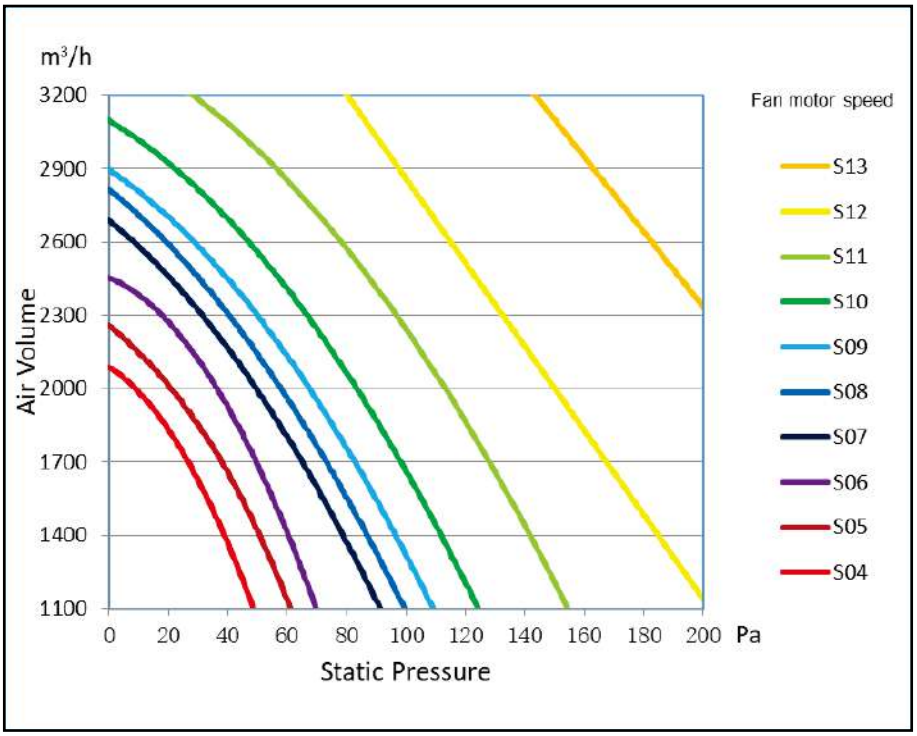

ASD-60BI2

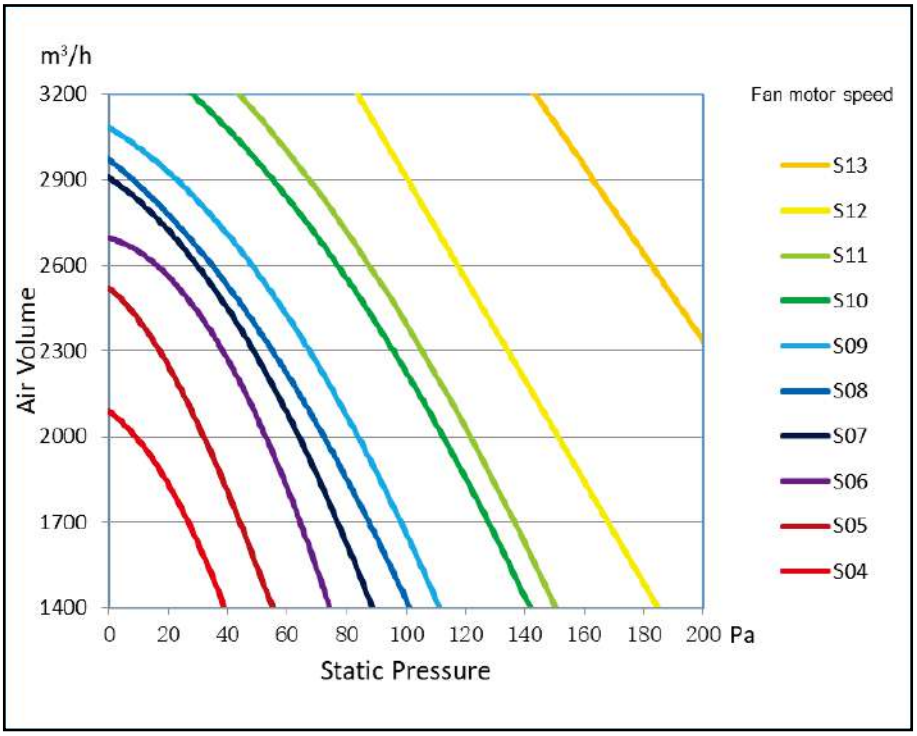

Notes:

1. The external static pressure (ESP) can be changed in 9 levels by the remote controller.
2. The default ESP mode setting is P05 which is the rated ESP.
3. The remote controller can be used to change turbo, H, M and L.

Static pressure selection	Super high speed	High speed	Medium speed	Low speed
P01	S05	S03	S02	S01
P02	S06	S04	S03	S02
P03	S07	S05	S04	S03
P04	S08	S06	S05	S04
P05	S09	S07	S06	S05
P06	S10	S08	S07	S06

7 AIRFLOW CHART

7.1 Cassette Type

ASC-12BI2; ASC-18BI2
Cooling temperature

Unit: ˚C (˚F)

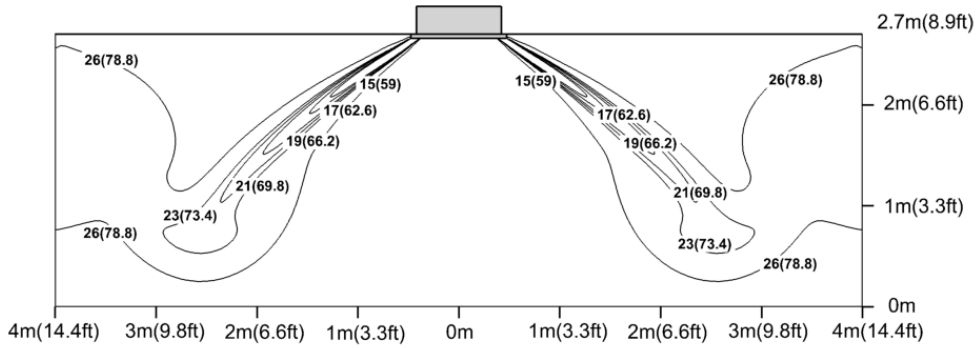

Cooling air velocity

Unit: m/s(ft/s)

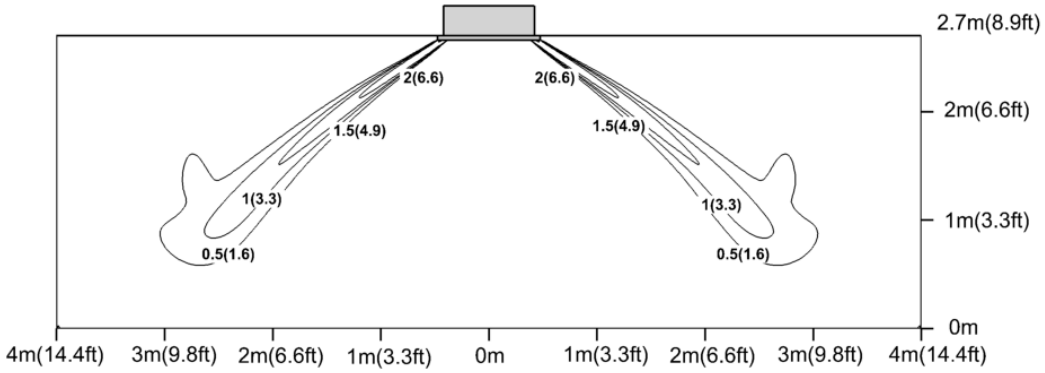

Heating temperature

Unit: ˚C (˚F)

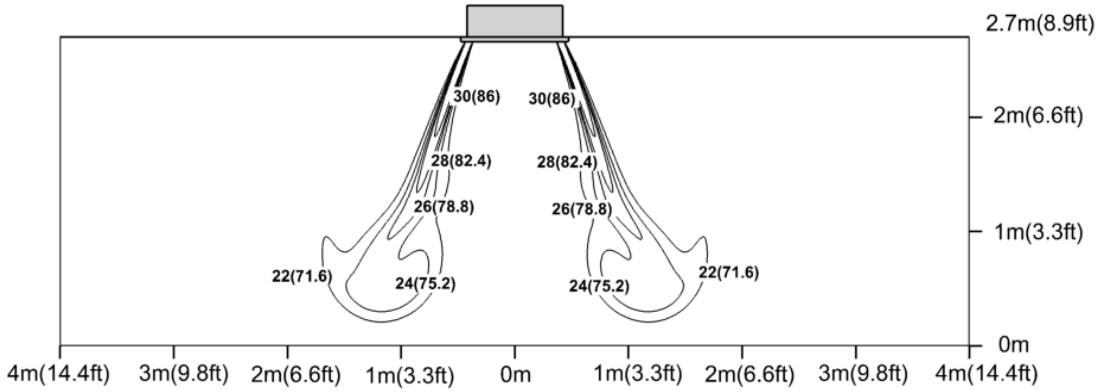

Heating air velocity

Unit: m/s(ft/s)

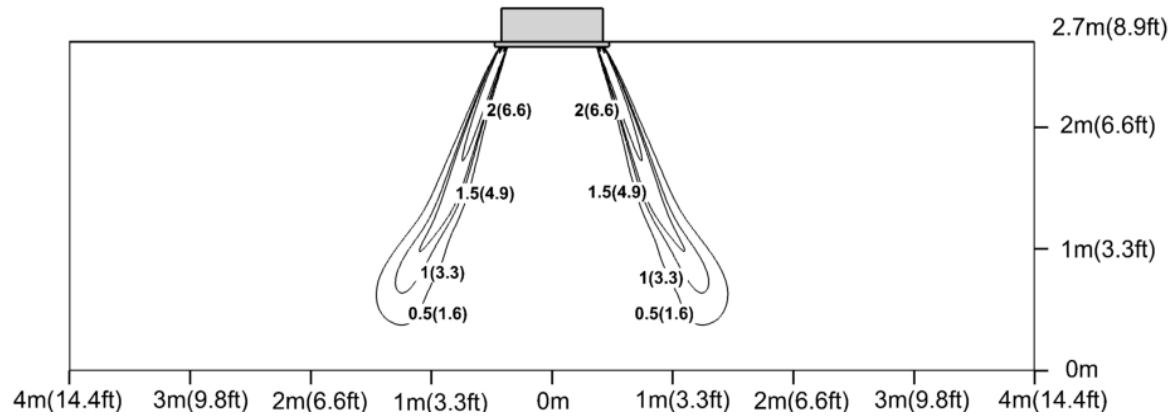

ASC-24BI2; ASC-30BI2

Cooling temperature

Unit: ℃ (℉)

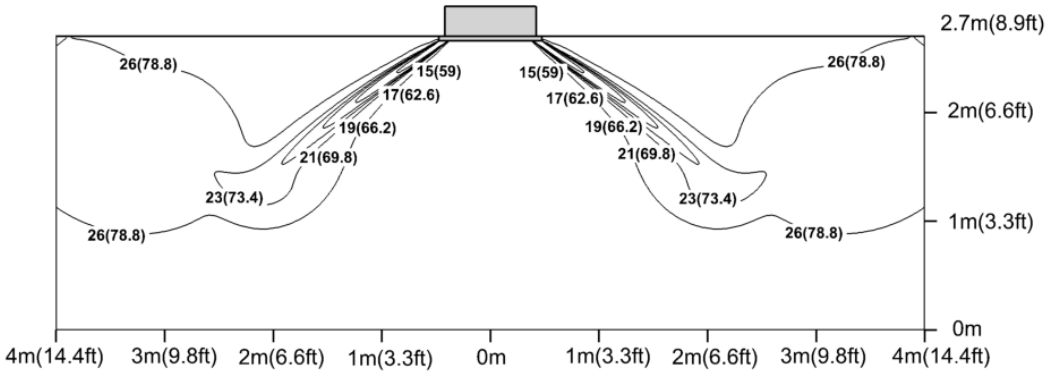

Cooling air velocity

Unit: m/s(ft/s)

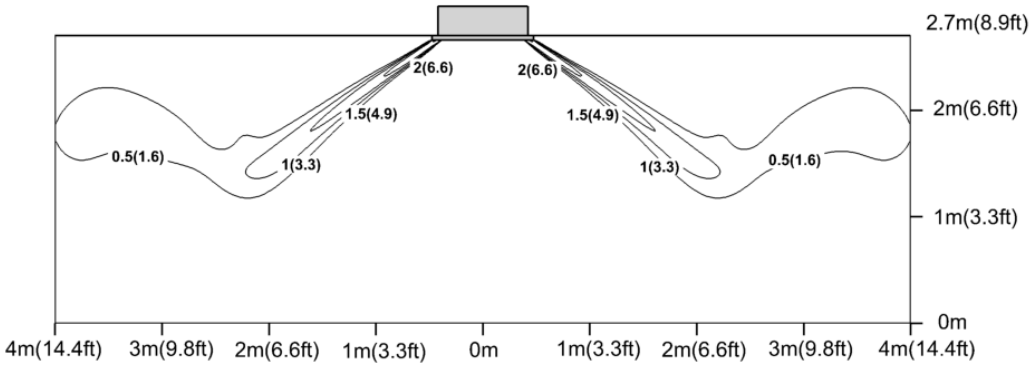

Heating temperature

Unit: ˚C (˚F)

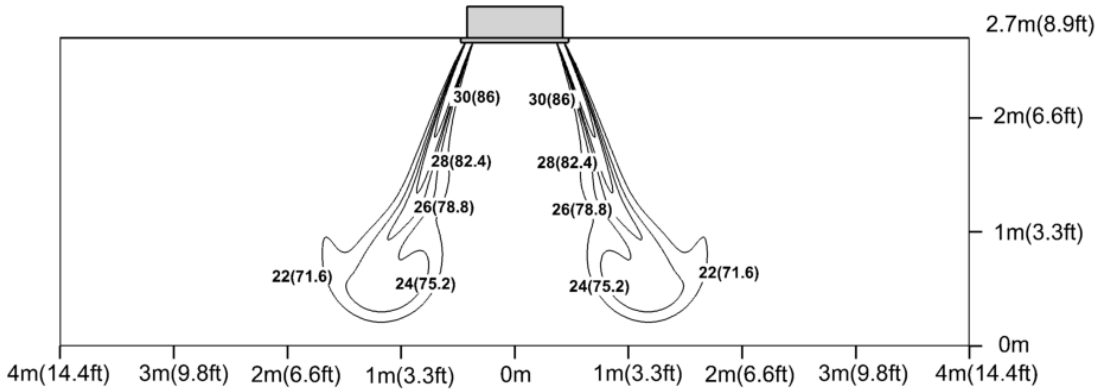

Heating air velocity

Unit: m/s(ft/s)

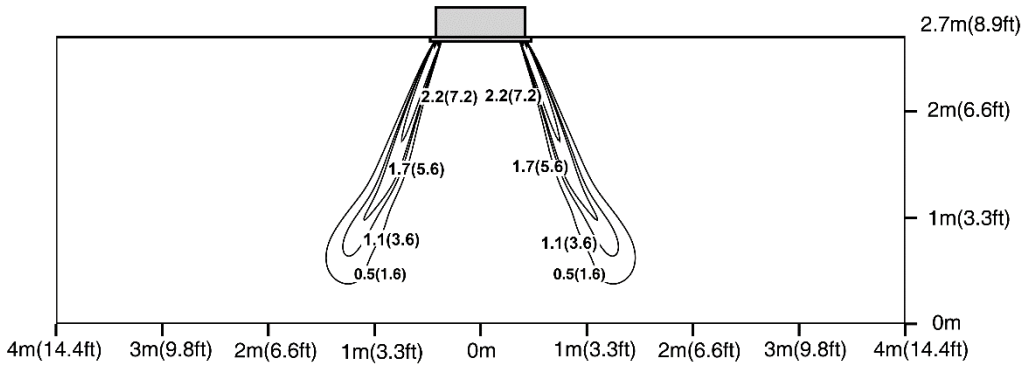

ASC-36BI2; ASC-42BI2

Cooling temperature

Unit: ˚C (˚F)

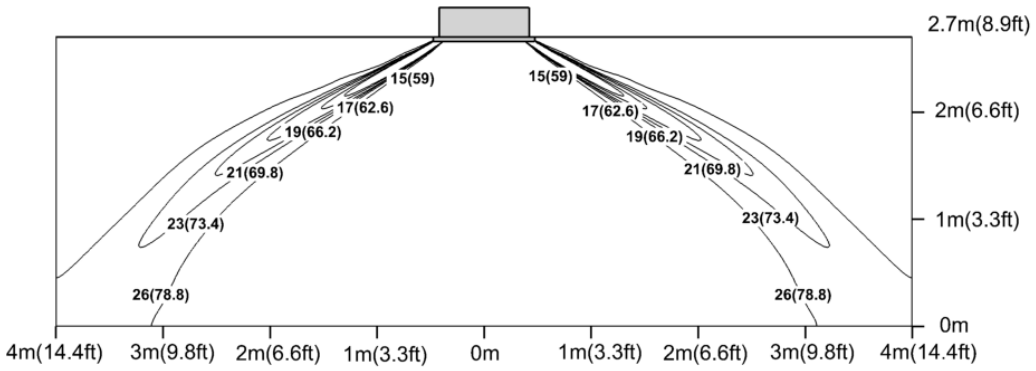

Cooling air velocity

Unit: m/s(ft/s)

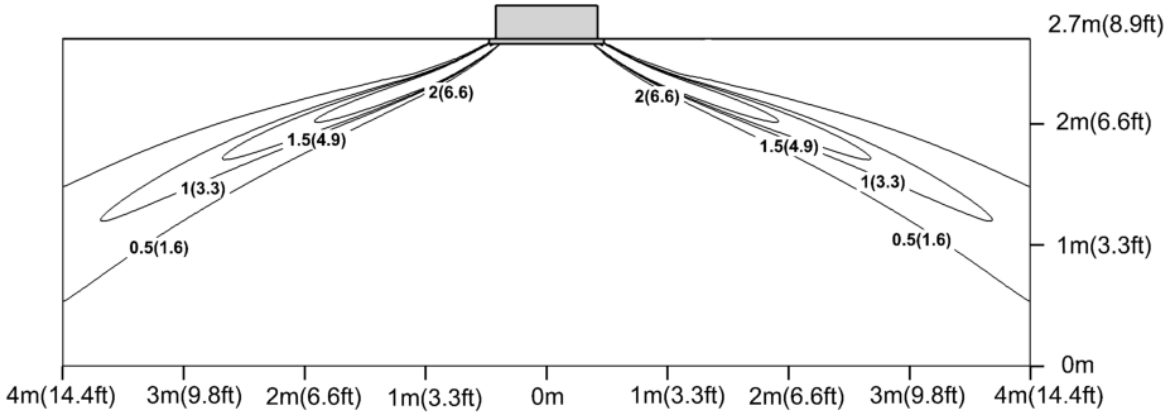

Heating temperature

Unit: ℃ (℉)

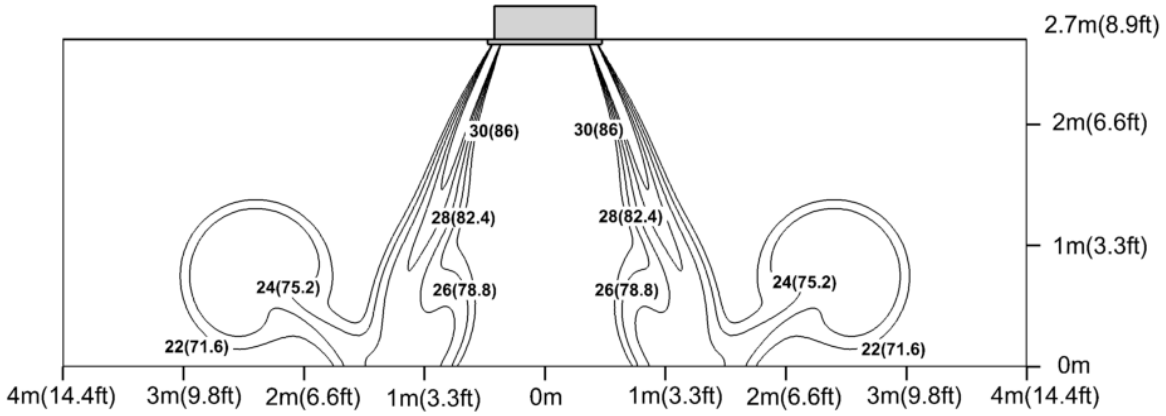

Heating air velocity

Unit: m/s(ft/s)

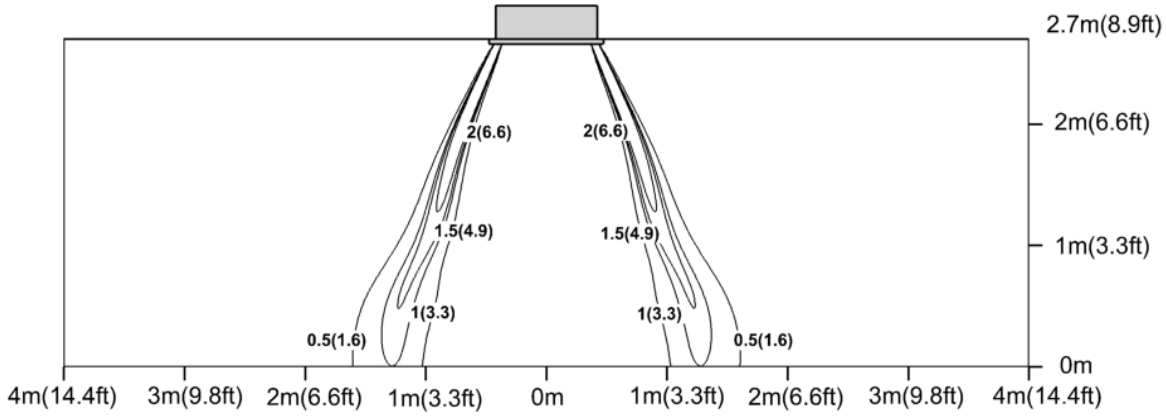

ASC-48BI2; ASC-60BI2
Cooling temperature

Unit: ˚C (˚F)

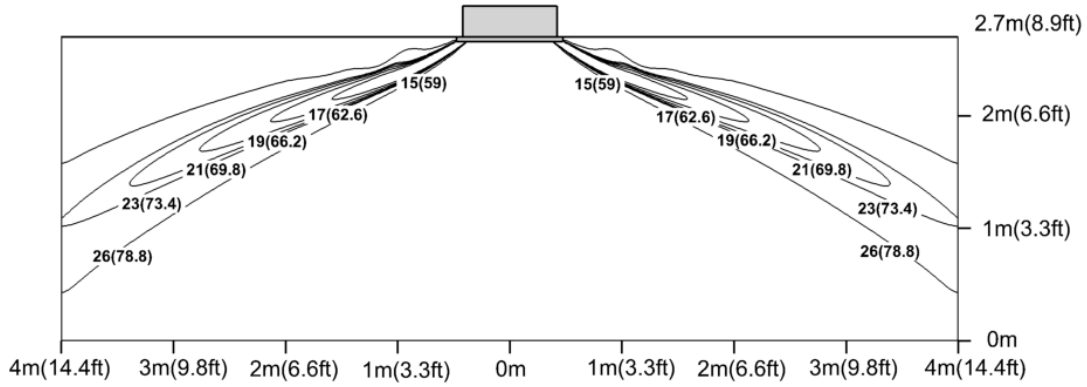

Cooling air velocity

Unit: m/s(ft/s)

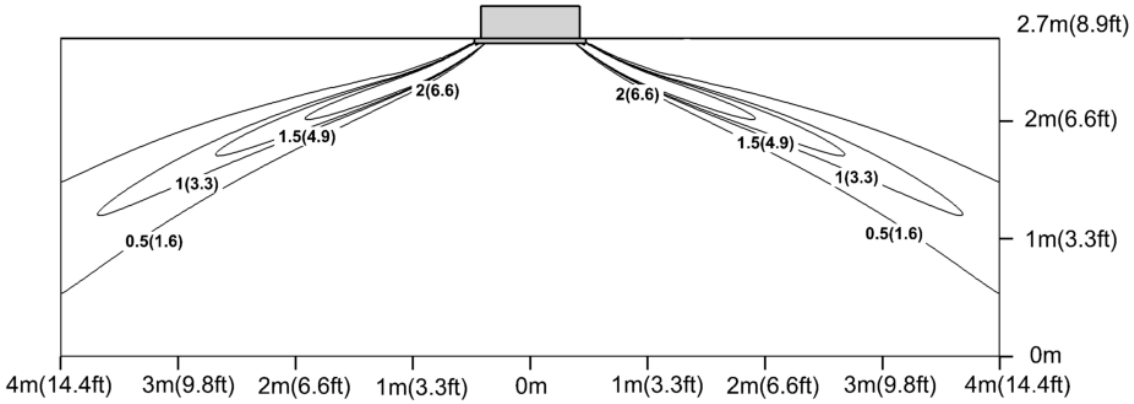

Heating temperature

Unit: ˚C (˚F)

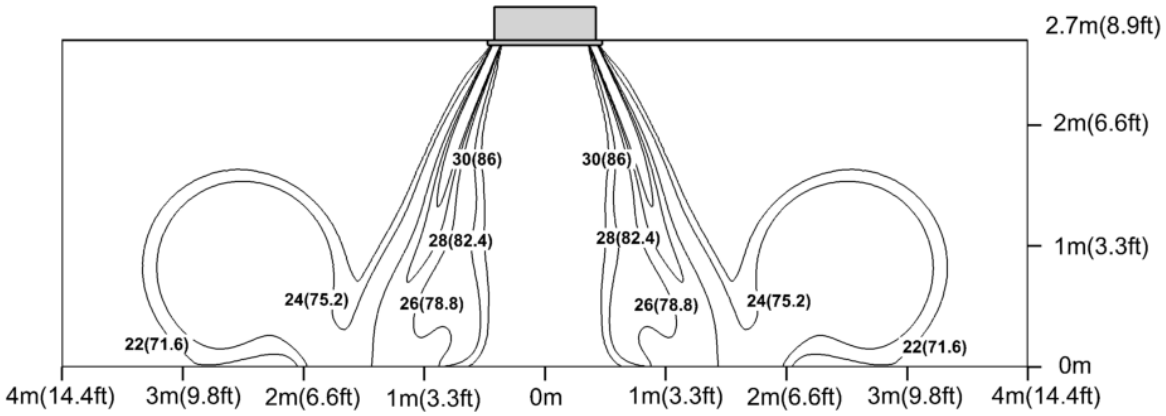

Heating air velocity

Unit: m/s(ft/s)

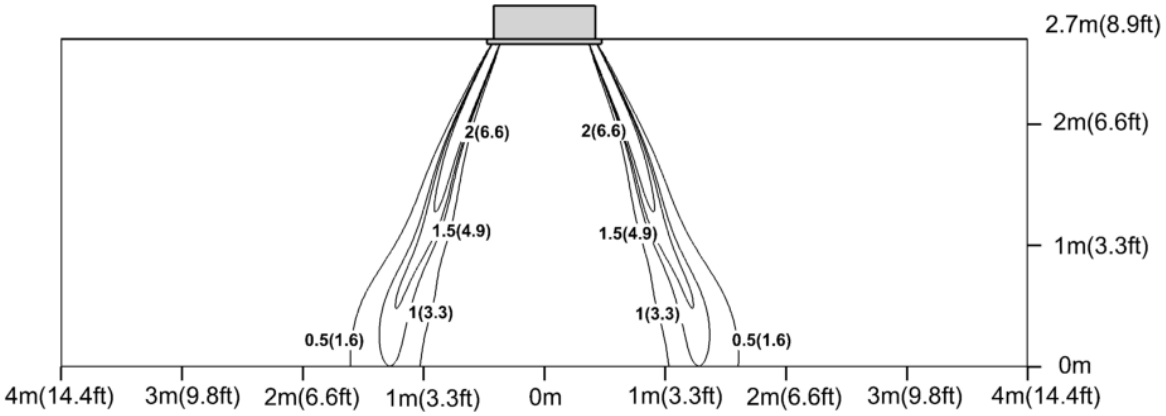

7.2 Floor Ceiling Type

ASF-12BI2
Cooling temperature

Unit: ˚C (˚F)

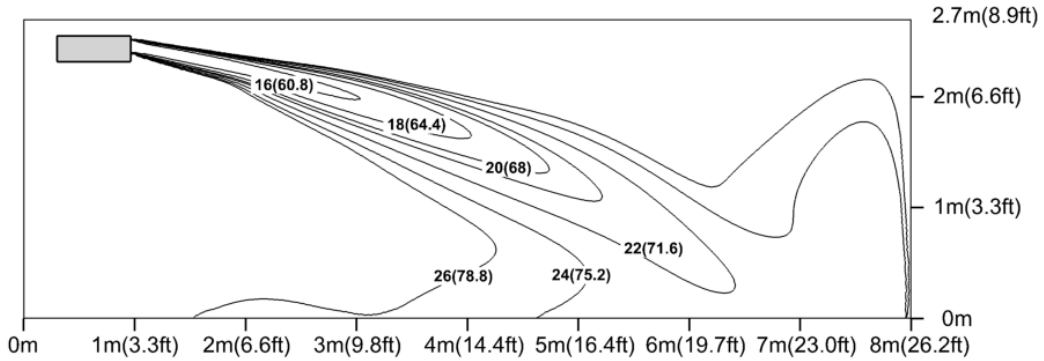

Cooling air velocity

Unit: m/s(ft/s)

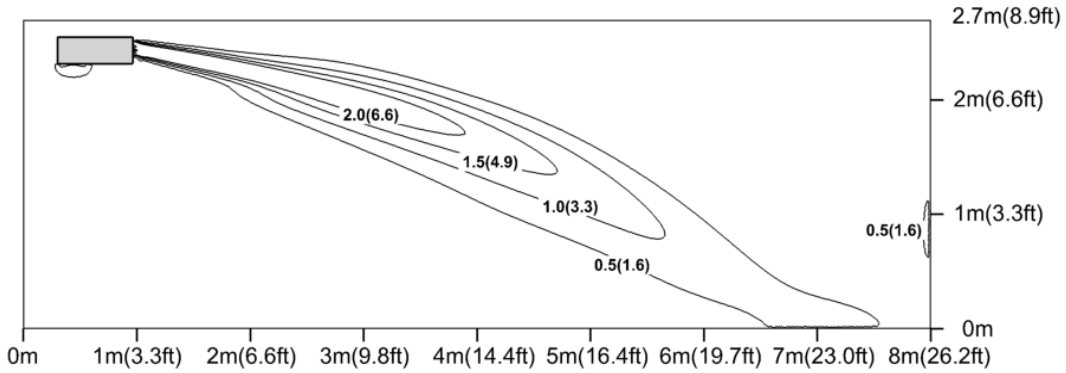

Heating temperature

Unit: ˚C (˚F)

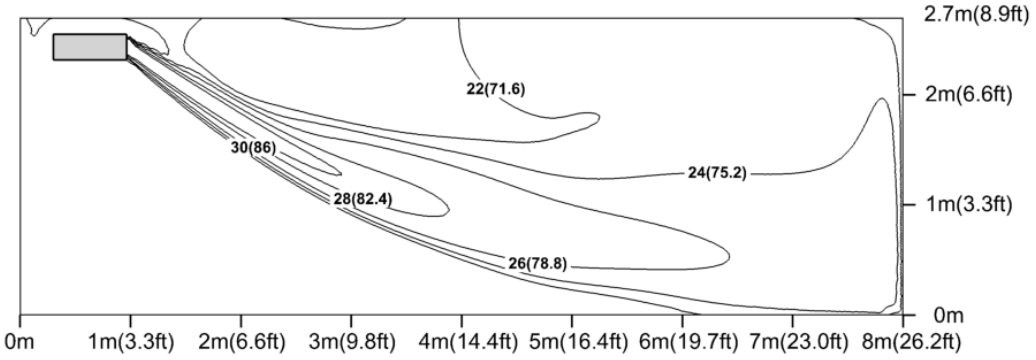

Heating air velocity

Unit: m/s(ft/s)

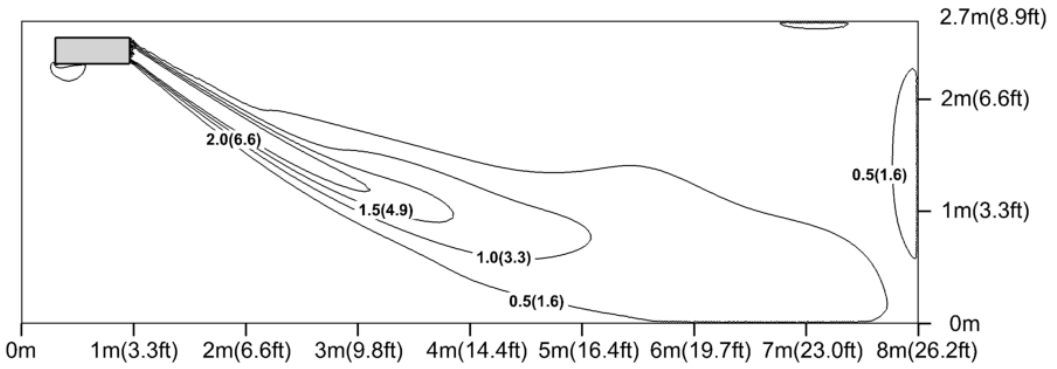

ASF-18BI2

Cooling temperature

Unit: ˚C (˚F)

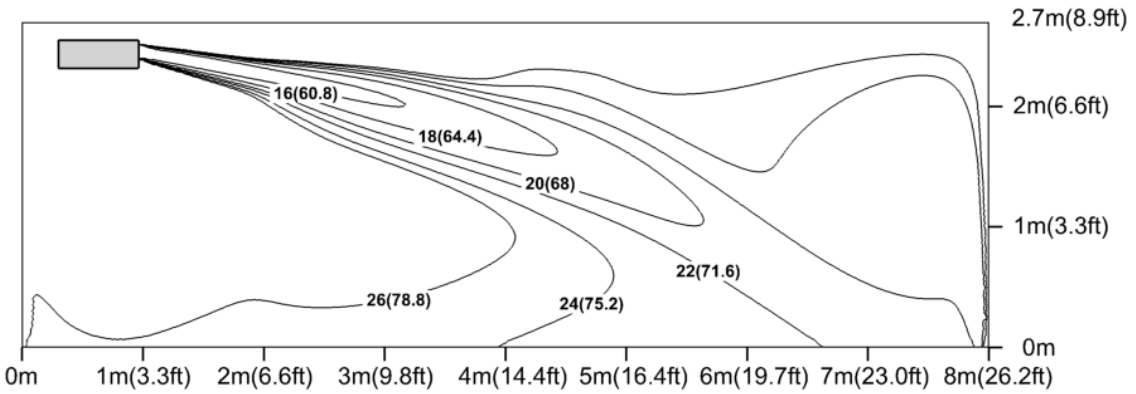

Cooling air velocity

Unit: m/s(ft/s)

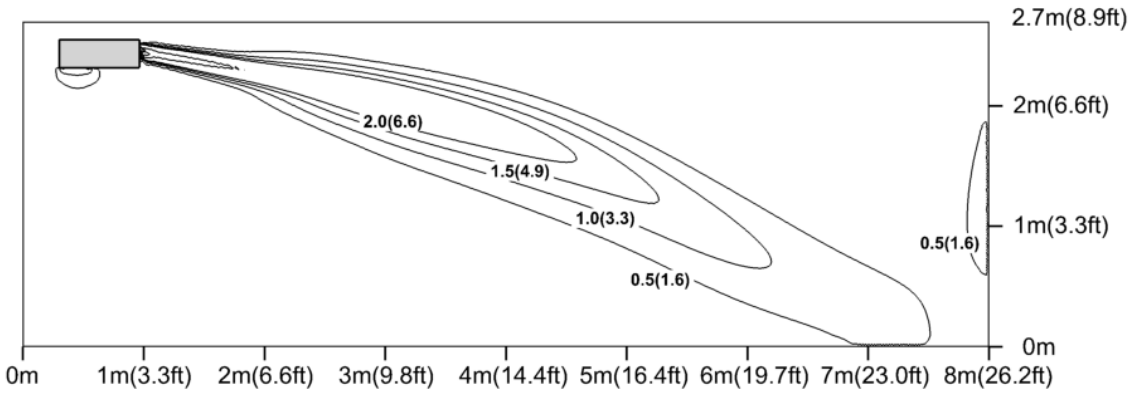

Heating temperature

Unit: ℃ (℉)

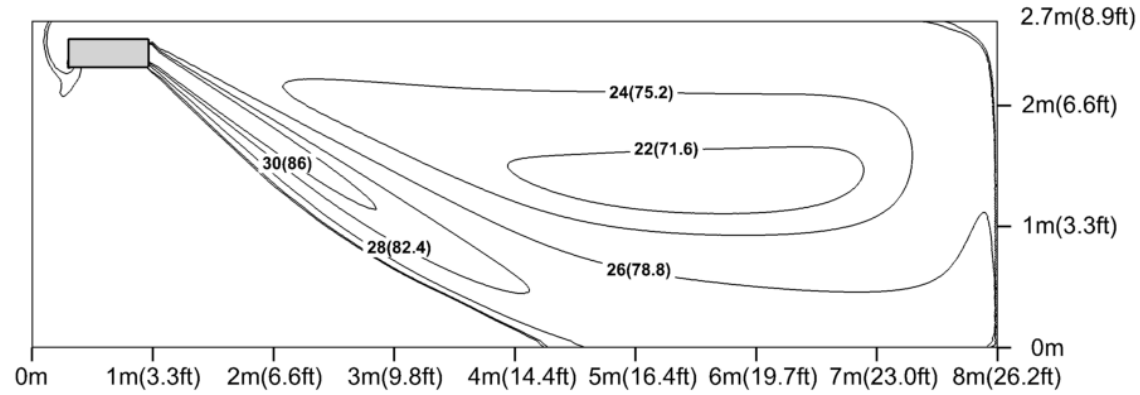

Heating air velocity

Unit: m/s(ft/s)

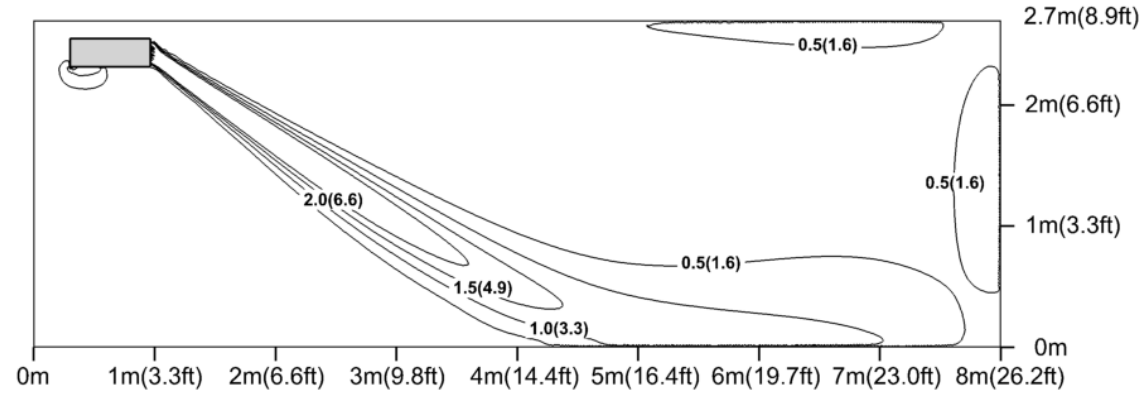

ASF-24BI2; ASF-30BI2
Cooling temperature

Unit: ˚C (˚F)

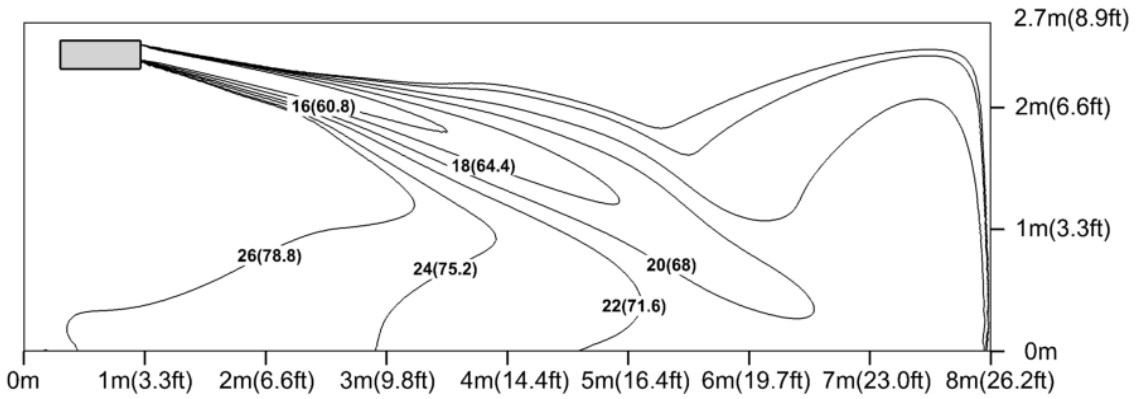

Cooling air velocity

Unit: m/s(ft/s)

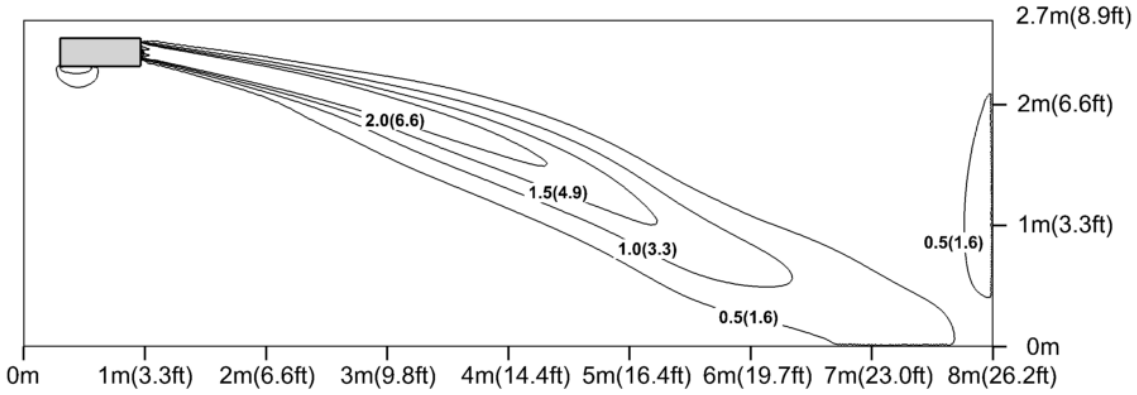

Heating temperature

Unit: ˚C (˚F)

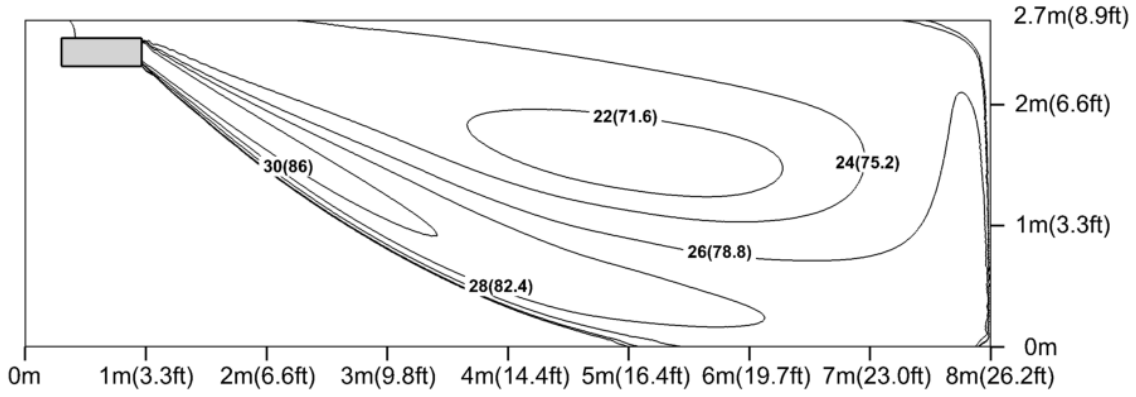

Heating air velocity

Unit: m/s(ft/s)

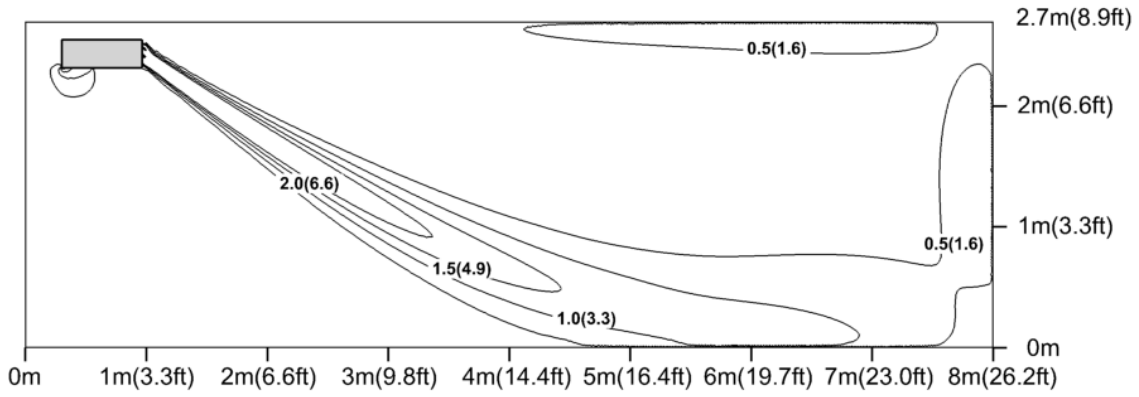

ASF-36BI2

Cooling temperature

Unit: ℃ (℉)

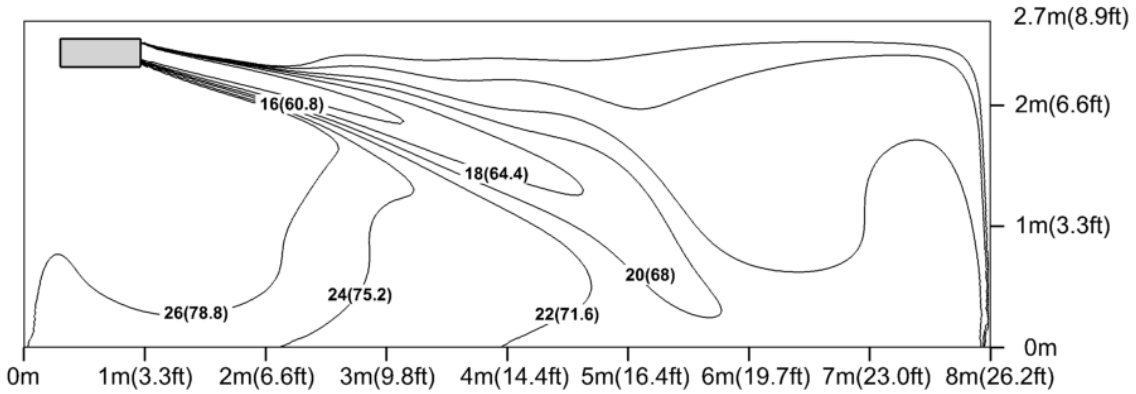

Cooling air velocity

Unit: m/s(ft/s)

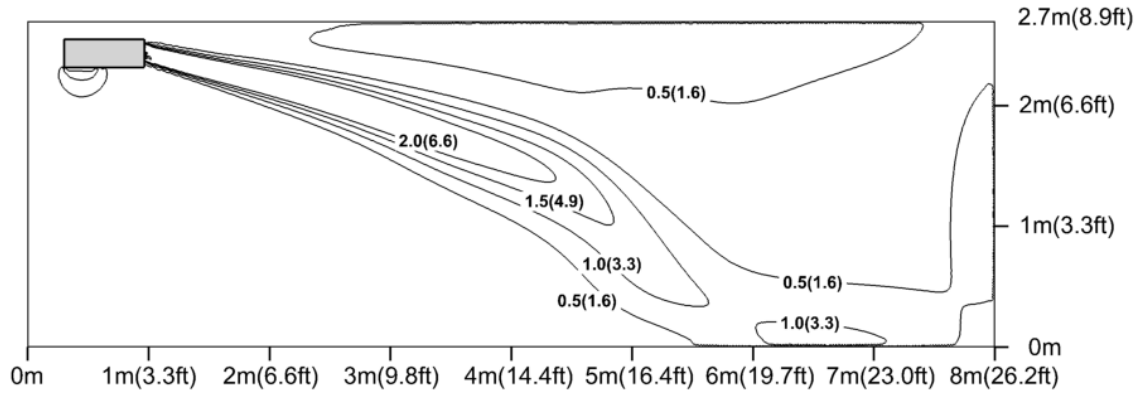

Heating temperature

Unit: ˚C (˚F)

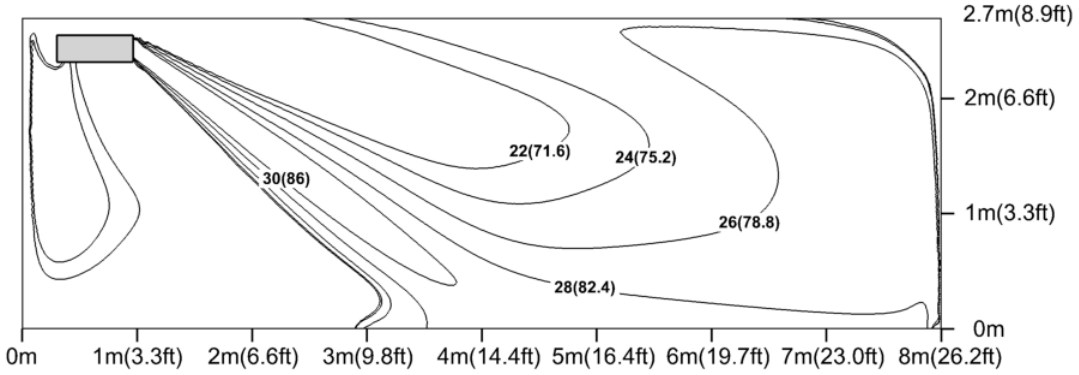

Heating air velocity

Unit: m/s(ft/s)

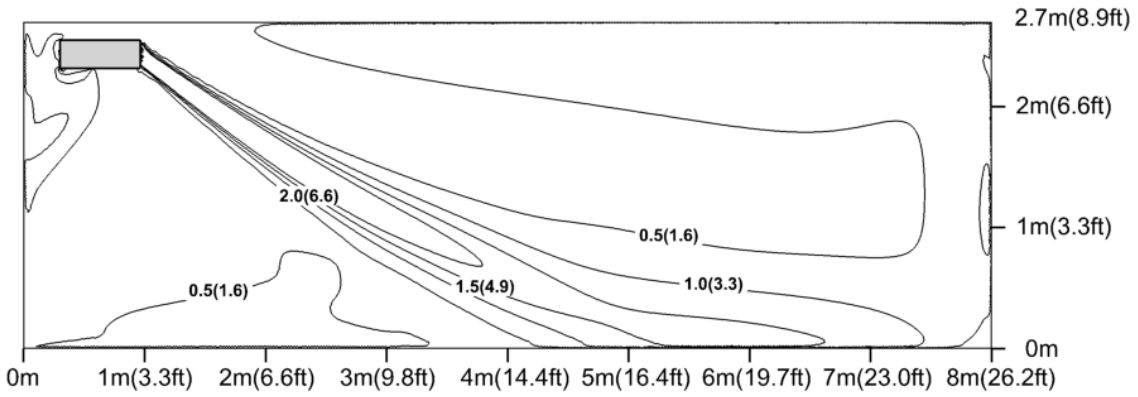

ASF-42BI2

Cooling temperature

Unit: ˚C (˚F)

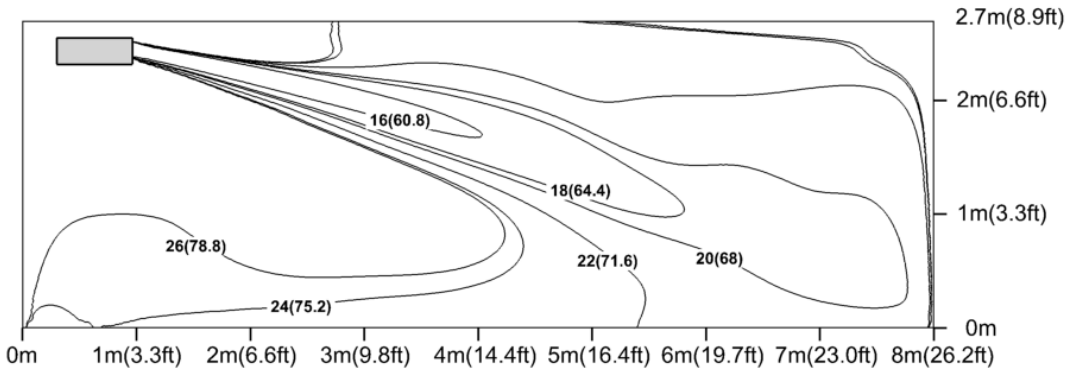

Cooling air velocity

Unit: m/s(ft/s)

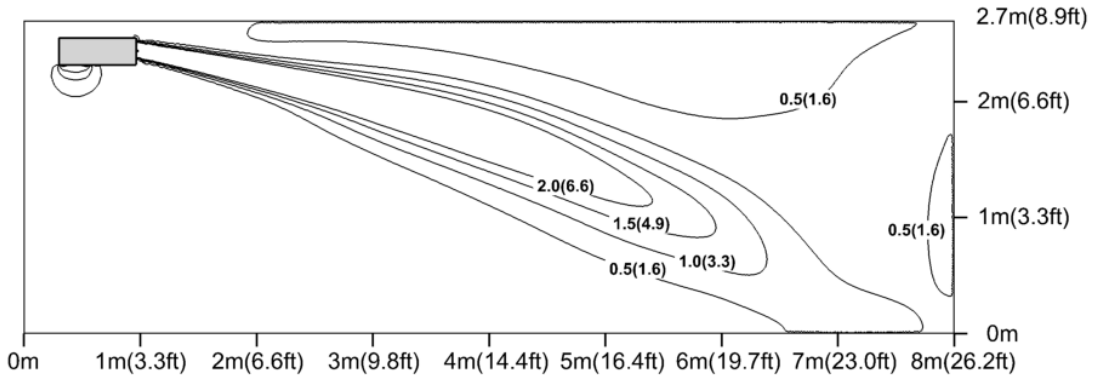

Heating temperature

Unit: ℃ (℉)

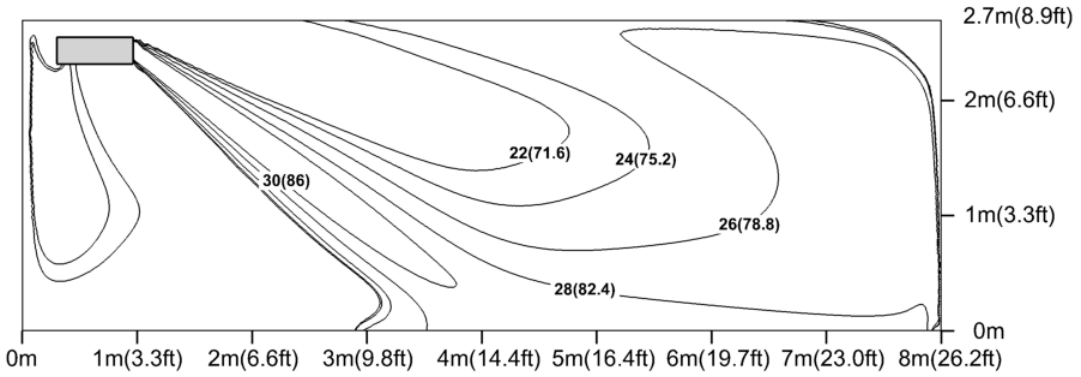

Heating air velocity

Unit: m/s(ft/s)

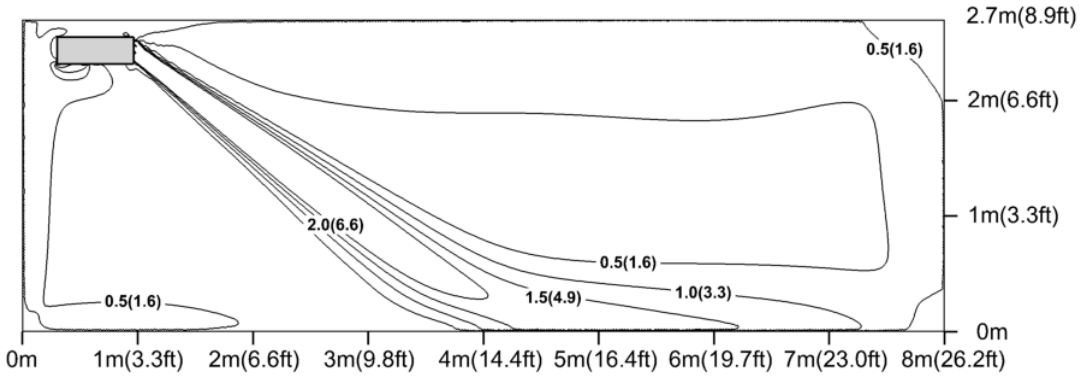

ASF-48BI2; ASF-60BI2
Cooling temperature

Unit: ˚C (˚F)

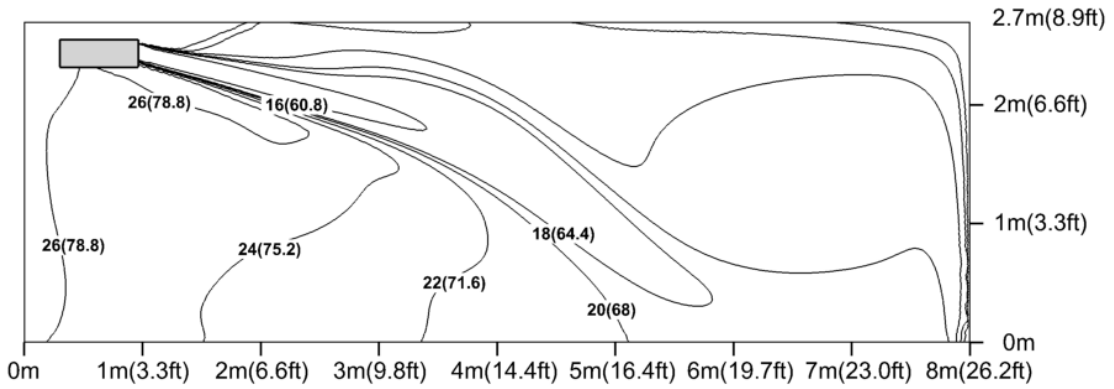

Cooling air velocity

Unit: m/s(ft/s)

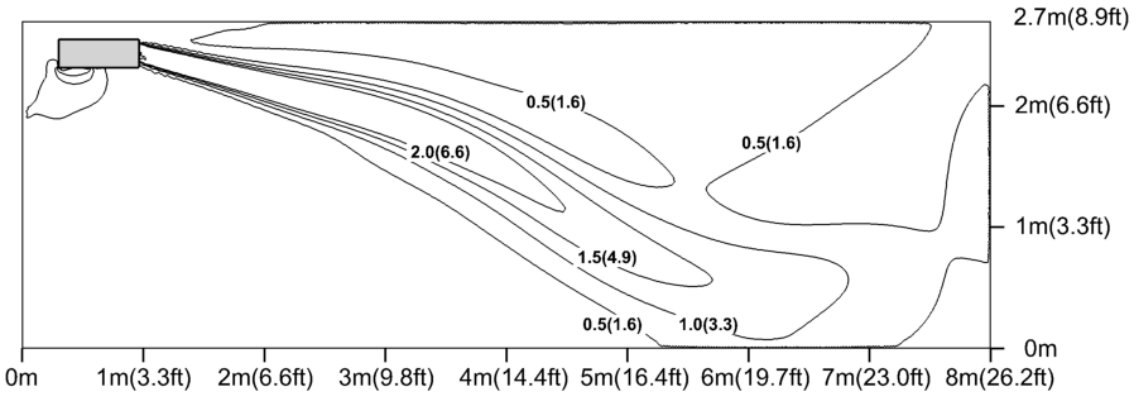

Heating temperature

Unit: ˚C (˚F)

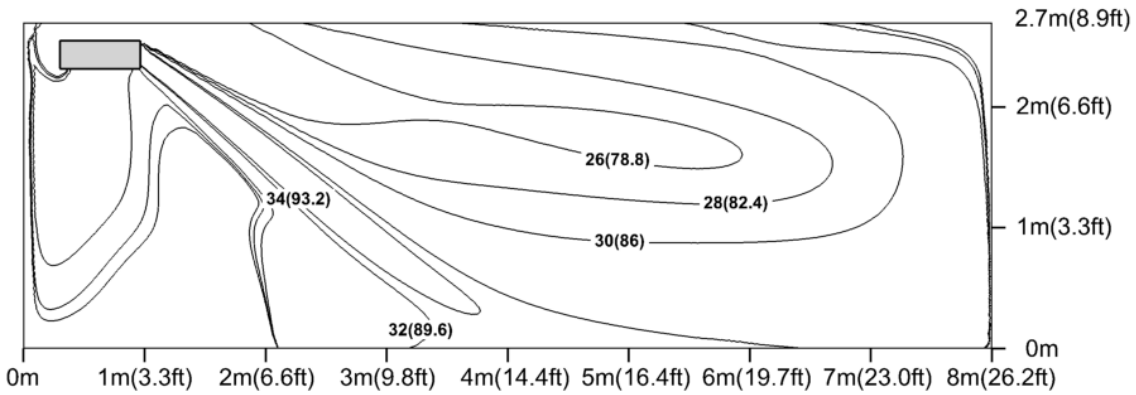

Heating air velocity

Unit: m/s(ft/s)

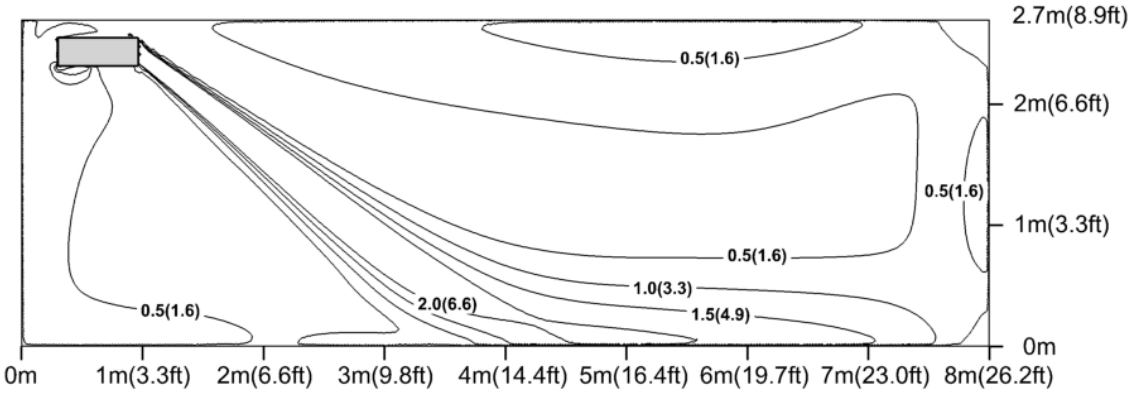

ASF-12BI2

Cooling temperature

Unit: ℃ (℉)

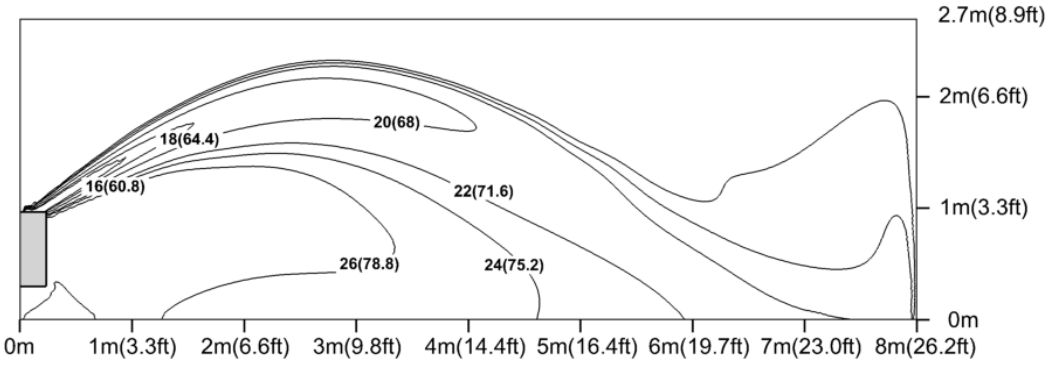

Cooling air velocity

Unit: m/s(ft/s)

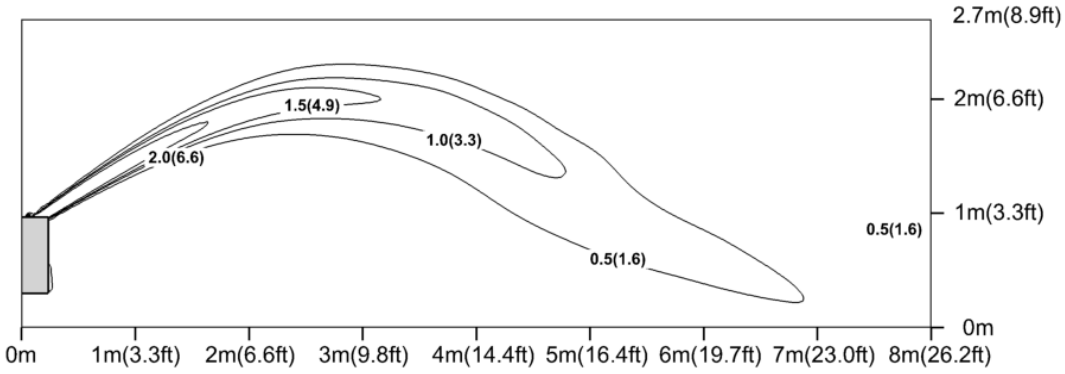

Heating temperature

Unit: ˚C (˚F)

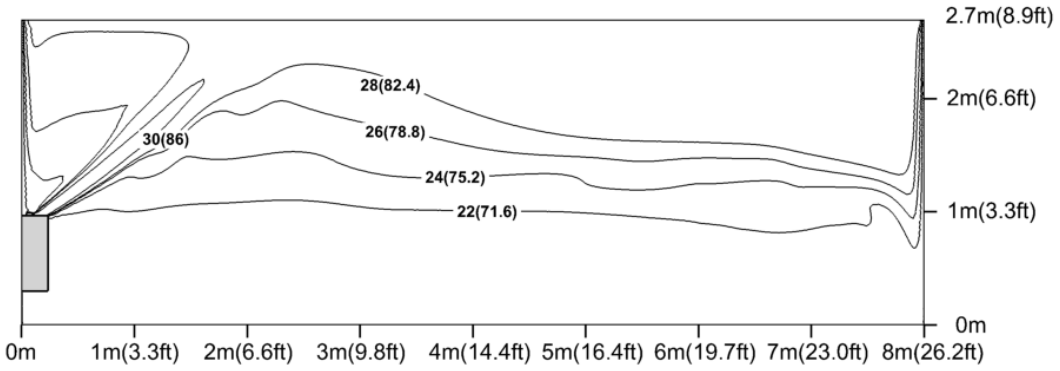

Heating air velocity

Unit: m/s(ft/s)

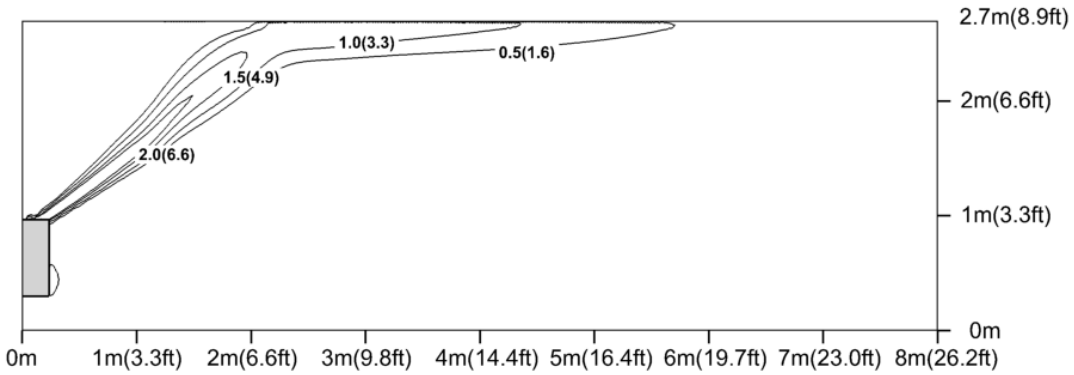

ASF-18BI2

Cooling temperature

Unit: ˚C (˚F)

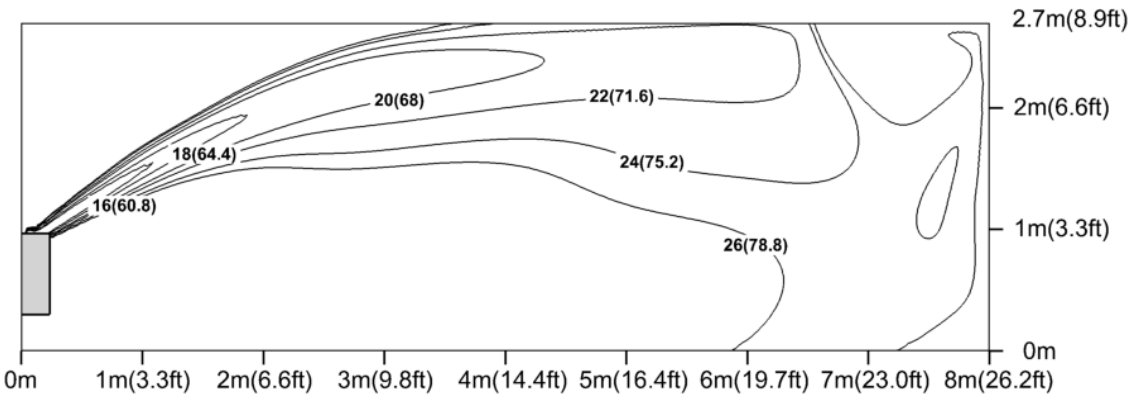

Cooling air velocity

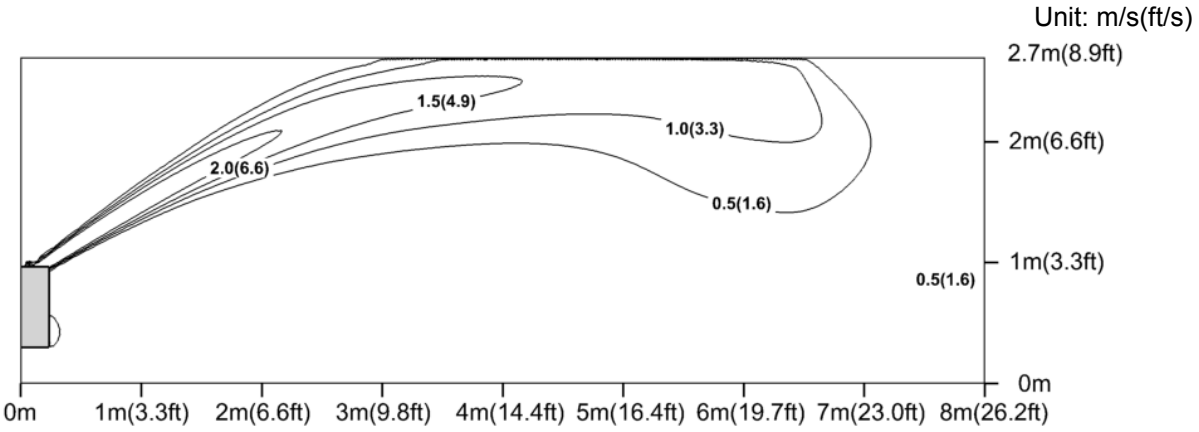

Heating temperature

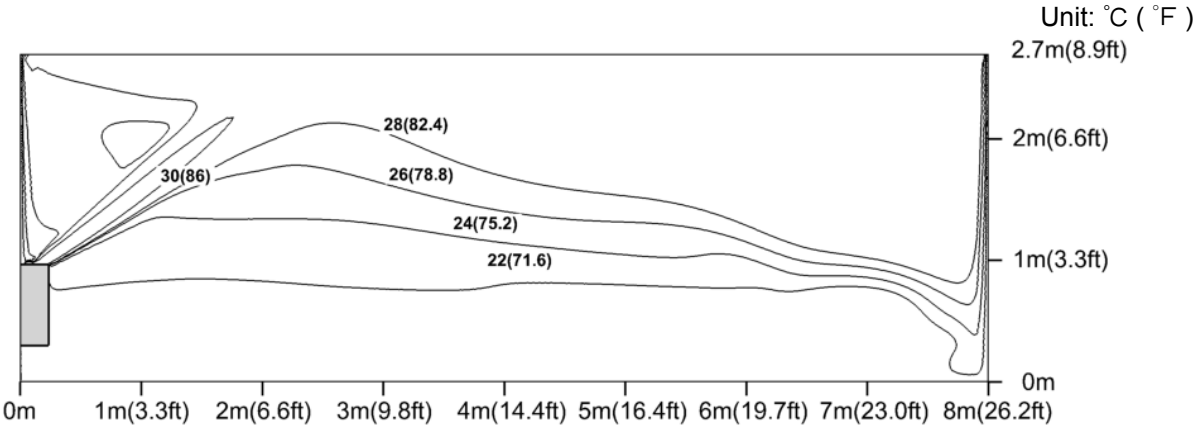

Heating air velocity

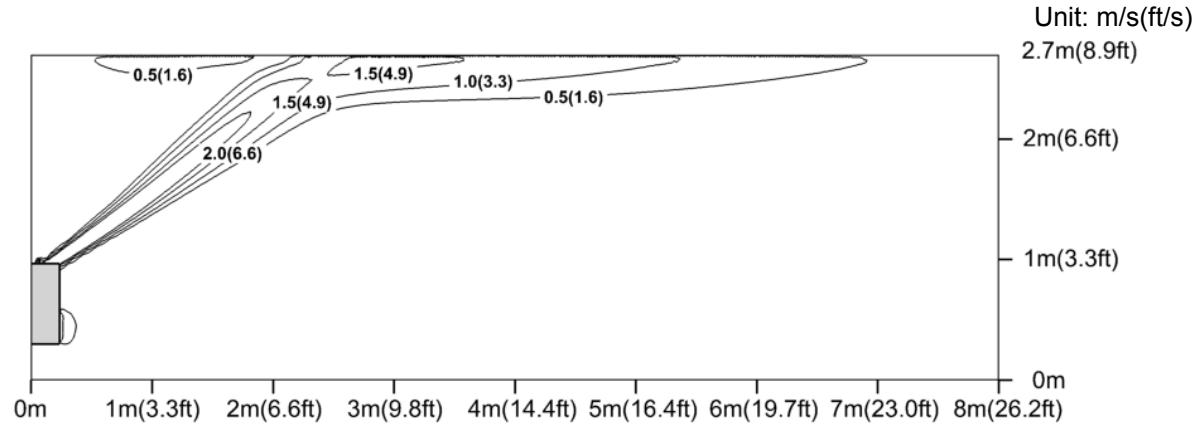

ASF-24BI2; ASF-30BI2
Cooling temperature

Unit: ˚C (˚F)

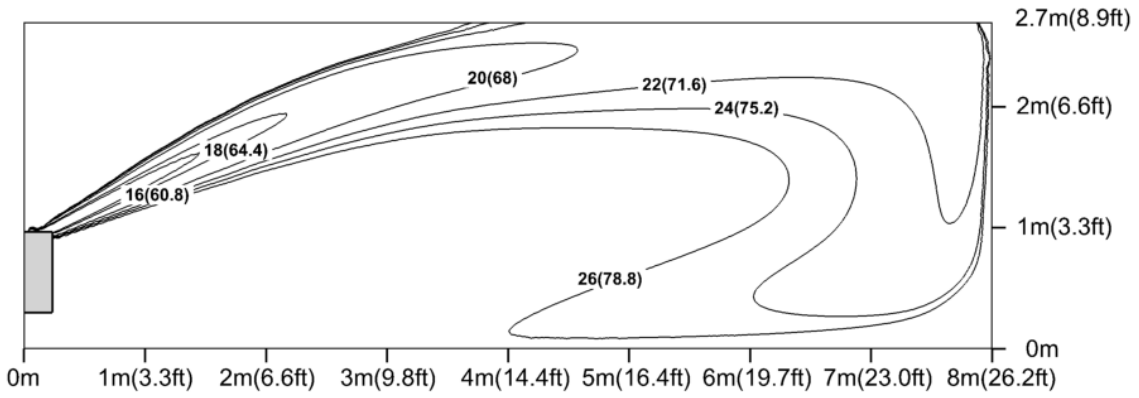

Cooling air velocity

Unit: m/s(ft/s)

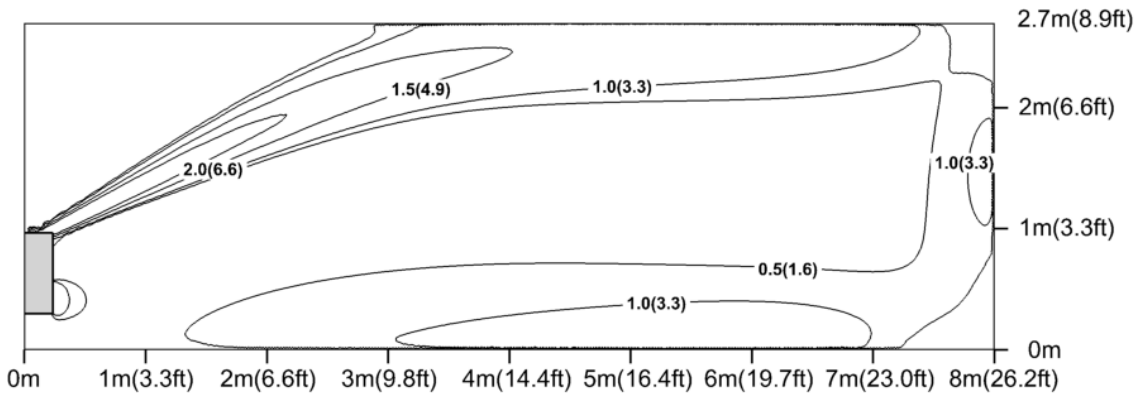

Heating temperature

Unit: ˚C (˚F)

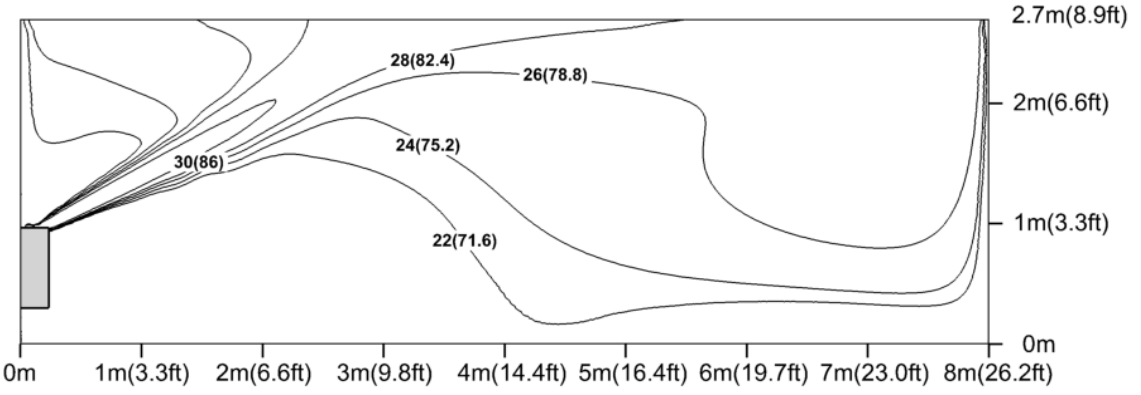

Heating air velocity

Unit: m/s(ft/s)

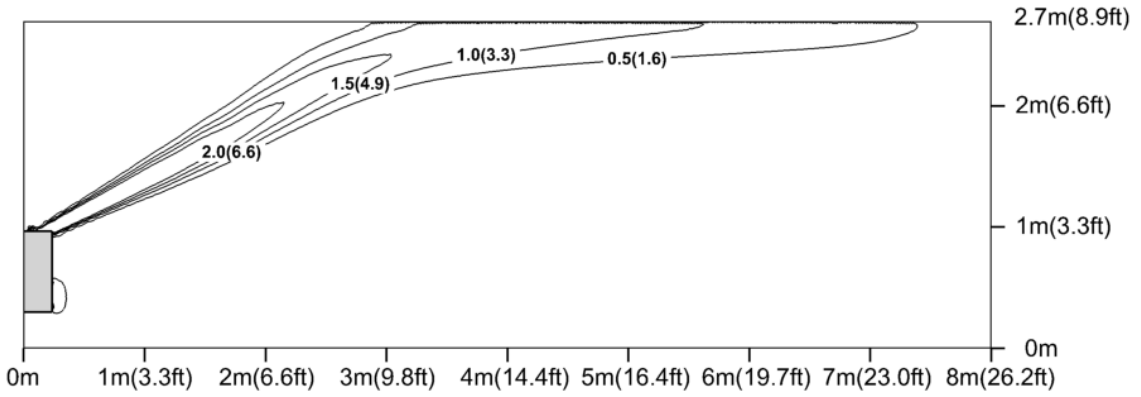

ASF-36BI2

Cooling temperature

Unit: ℃ (℉)

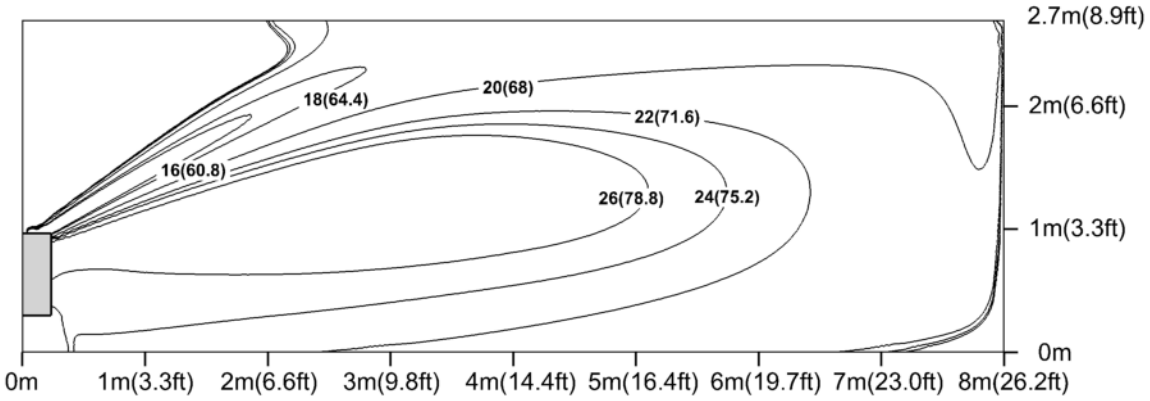

Cooling air velocity

Unit: m/s(ft/s)

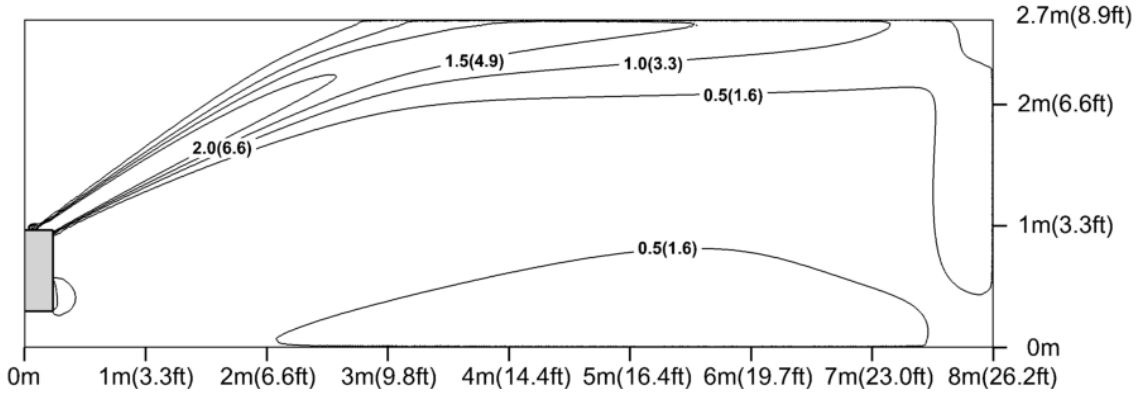

Heating temperature

Unit: ˚C (˚F)

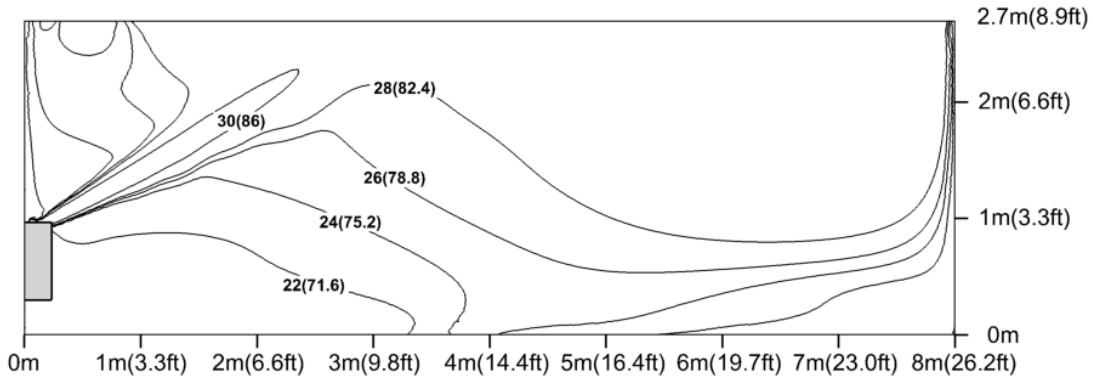

Heating air velocity

Unit: m/s(ft/s)

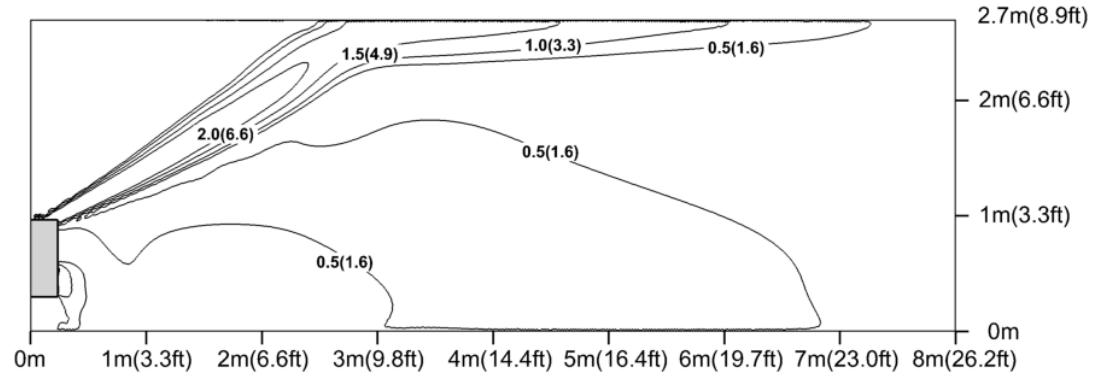

ASF-42BI2

Cooling temperature

Unit: ˚C (˚F)

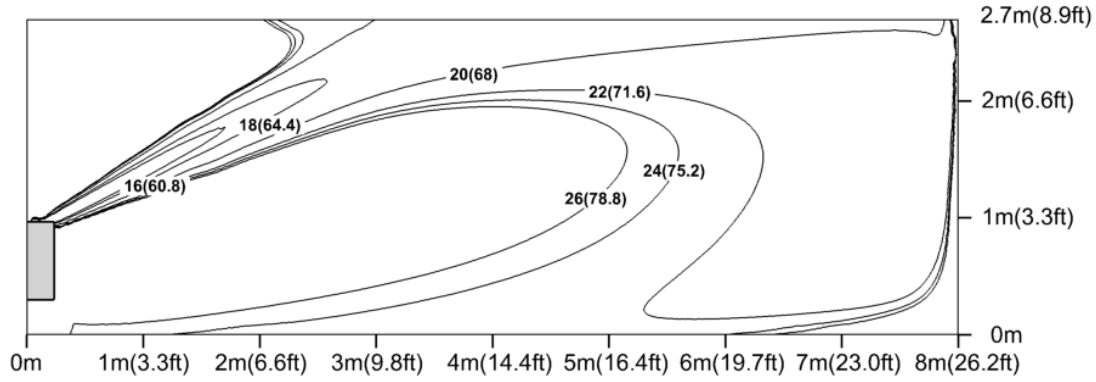

Cooling air velocity

Unit: m/s(ft/s)

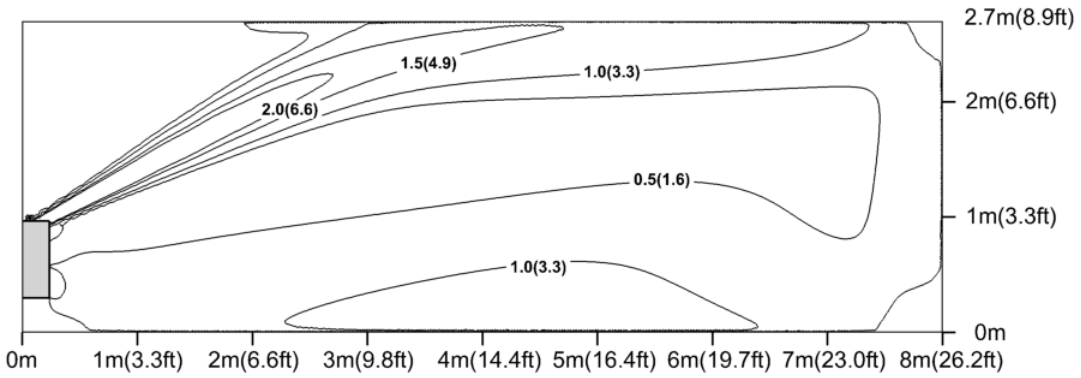

Heating temperature

Unit: ℃ (℉)

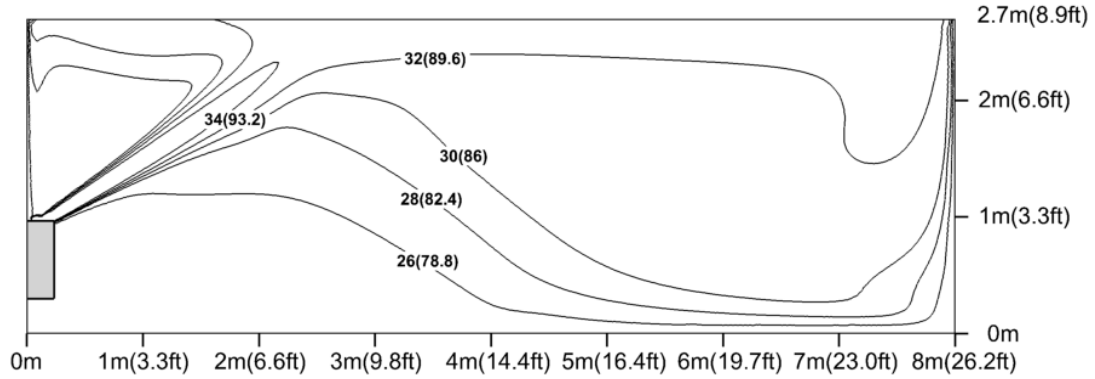

Heating air velocity

Unit: m/s(ft/s)

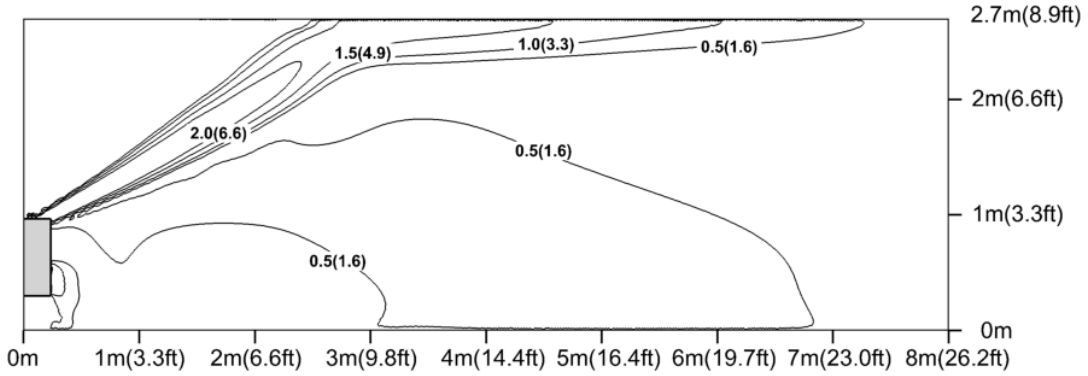

ASF-48BI2; ASF-60BI2
Cooling temperature

Unit: ˚C (˚F)

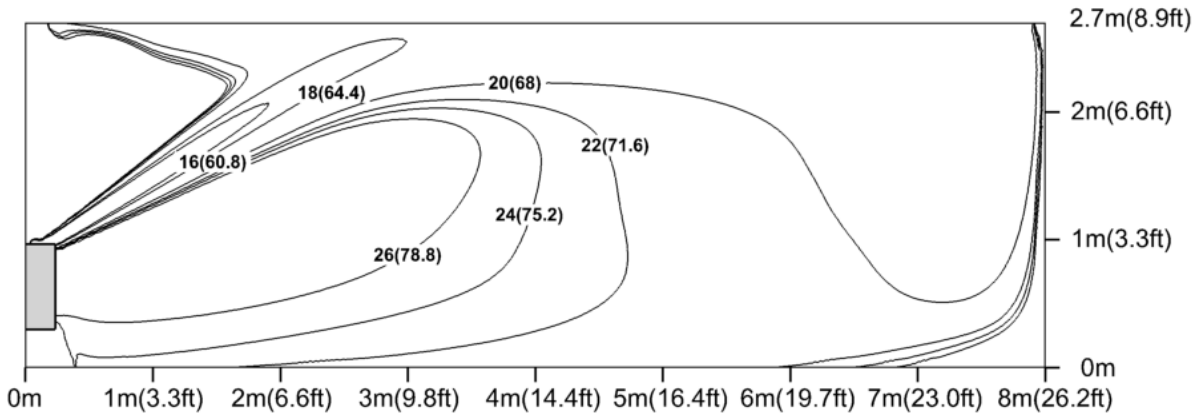

Cooling air velocity

Unit: m/s(ft/s)

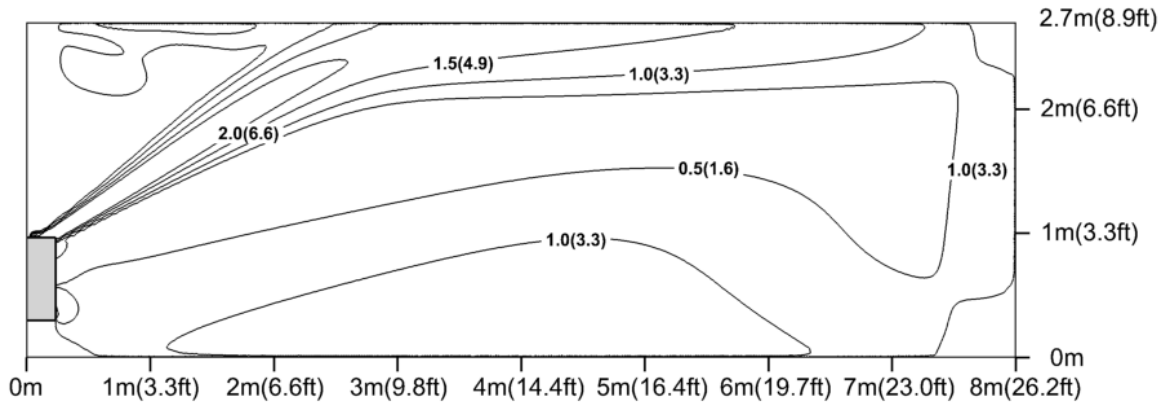

Heating temperature

Unit: ˚C (˚F)

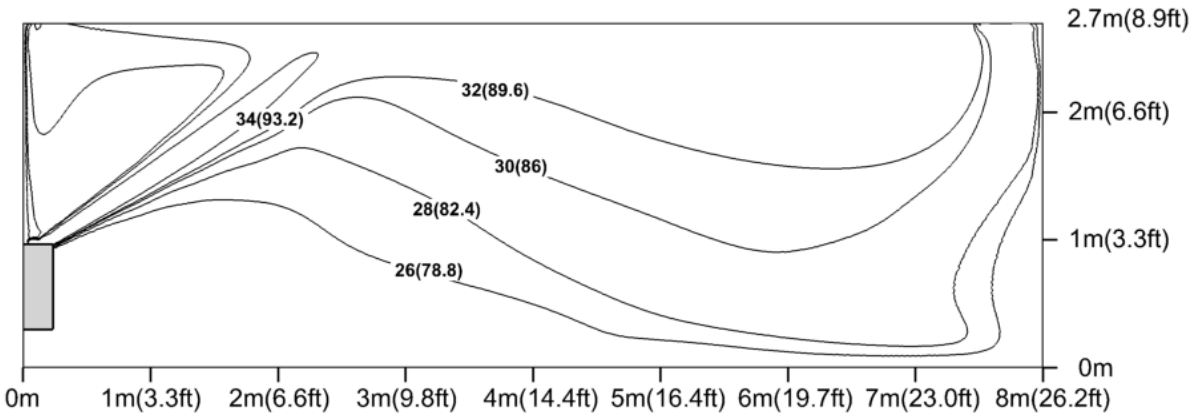

Heating air velocity

Unit: m/s(ft/s)

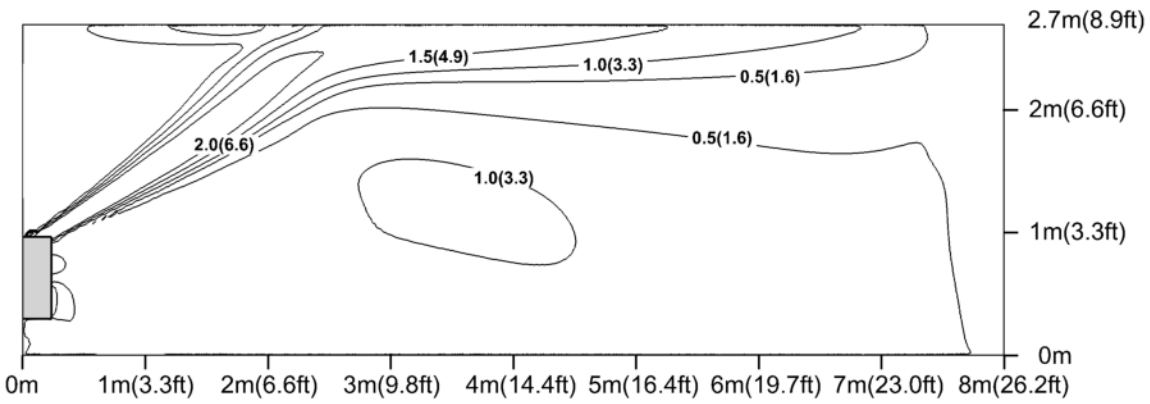

8 NOISE

8.1 Cassette Type

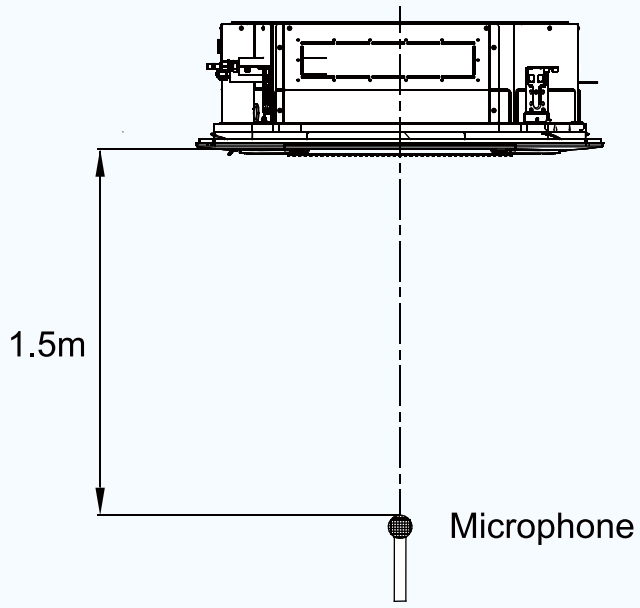

Model	Turbo dB(A)	H dB(A)	M dB(A)	L dB(A)
ASC-12BI2	36	35	33	29
ASC-18BI2	43	41	39	35
ASC-24BI2	39	38	36	34
ASC-30BI2	47	46	42	38

Model	Turbo dB(A)	H dB(A)	M dB(A)	L dB(A)
ASC-36BI2	43	41	39	38
ASC-42BI2	48	46	43	39
ASC-48BI2	50	48	45	41
ASC-60BI2	52	50	48	44

Notes:

1. Above data was measured under standard conditions. Power specification: 230V ~50Hz.
2. Above data was measured in a semi-anechoic room.
3. Decibels will be varied with the change of external factors, for instance, the room structure. Please refer to the actual measurement.

8.2 Duct Type

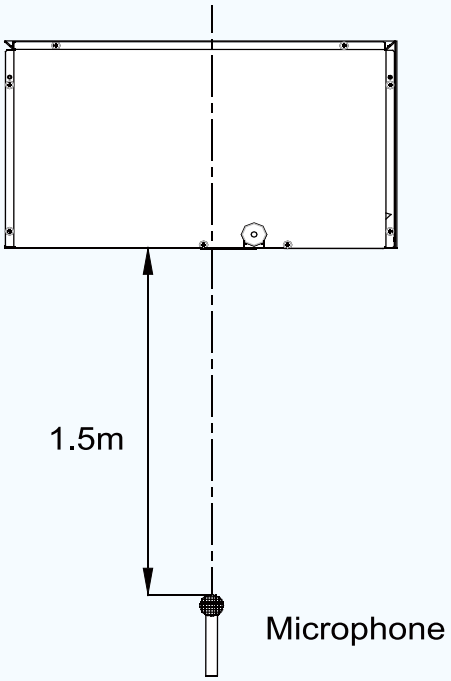

Model	Turbo dB(A)	H dB(A)	M dB(A)	L dB(A)
ASD-12BI2	35	33	32	30
ASD-18BI2	36	35	33	31
ASD-24BI2	37	35	33	31
ASD-30BI2	43	41	39	37
ASD-36BI2	39	38	37	36
ASD-42BI2	43	42	41	40

Model	Turbo dB(A)	H dB(A)	M dB(A)	L dB(A)
ASD-48BI2	43	42	40	38
ASD-60BI2	46	44	42	40

Notes:

1. Above data was measured under standard conditions. Power specification: 230V ~50Hz.
2. Above data was measured in a semi-anechoic room.
3. Decibels will be varied with the change of external factors, for instance, the room structure. Please refer to the actual measurement.

8.3 Floor Ceiling Type

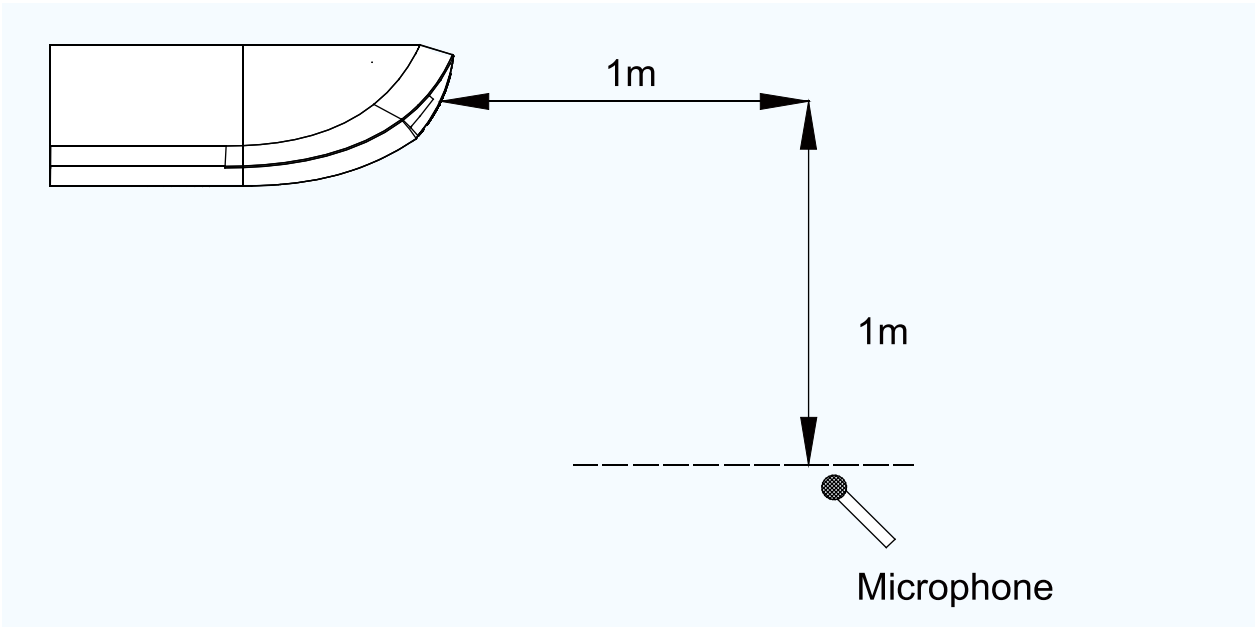

Model	Turbo dB(A)	H dB(A)	M dB(A)	L dB(A)
ASF-12BI2	35	34	31	28
ASF-18BI2	41	40	38	36
ASF-24BI2	41	39	37	35
ASF-30BI2	46	45	43	39
ASF-36BI2	48	46	45	43
ASF-42BI2	45	43	40	38
ASF-48BI2	51	48	45	43
ASF-60BI2	53	51	48	44

Notes:

1. Above data was measured under standard conditions. Power specification: 230V ~50Hz.
2. Above data was measured in a semi-anechoic room.
3. Decibels will be varied with the change of external factors, for instance, the room structure. Please refer to the actual measurement.

8.4 Outdoor Unit

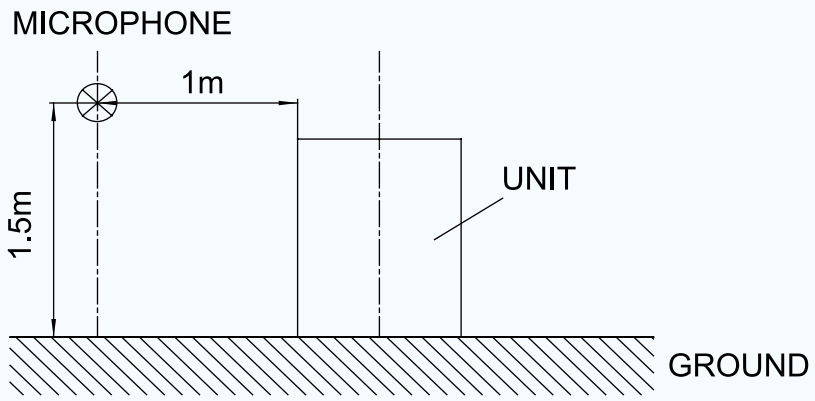

Model	Sound pressure level dB(A)	Power supply (V,Ph,Hz)
ASGE-12BI2	48	230V ~50Hz
ASGE-18BI2	52	
ASGE-24BI2	55	
ASGE-30BI2	57	
ASGE-36BI2	57	
ASGE-42BI2	58	
ASGE-48BI2	59	
ASGE-36BI2-3	57	400V 3N~50Hz
ASGE-42BI2-3	58	
ASGE-48BI2-3	59	
ASGE-60BI2-3	60	

Notes:

1. Above data was measured under standard conditions.
2. Above data was measured in a semi-anechoic room.
3. Decibels will be varied with the change of external factors, for instance, the room structure. Please refer to the actual measurement.

9 DIMENSIONS AND INSTALLATION SITE

9.1 Cassette Type

ASC-12BI2; ASC-18BI2

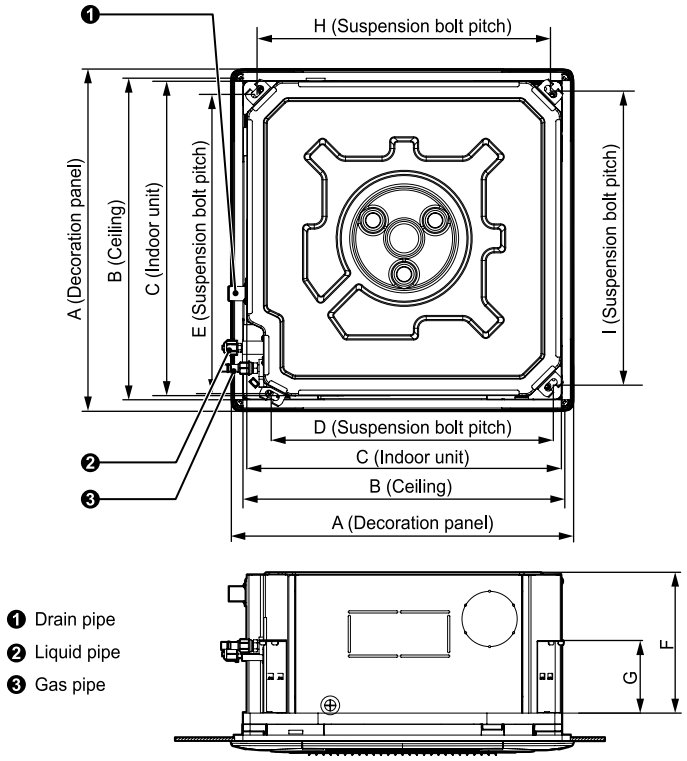

Unit: mm

Dimensions / Model	A	B	C	D	E	F	G	H	I
ASC-12BI2	620	580	570	505	550	260	140	530	530
ASC-18BI2									

ASC-24BI2, ASC-30BI2, ASC-36BI2, ASC-42BI2, ASC-48BI2, ASC-60BI2

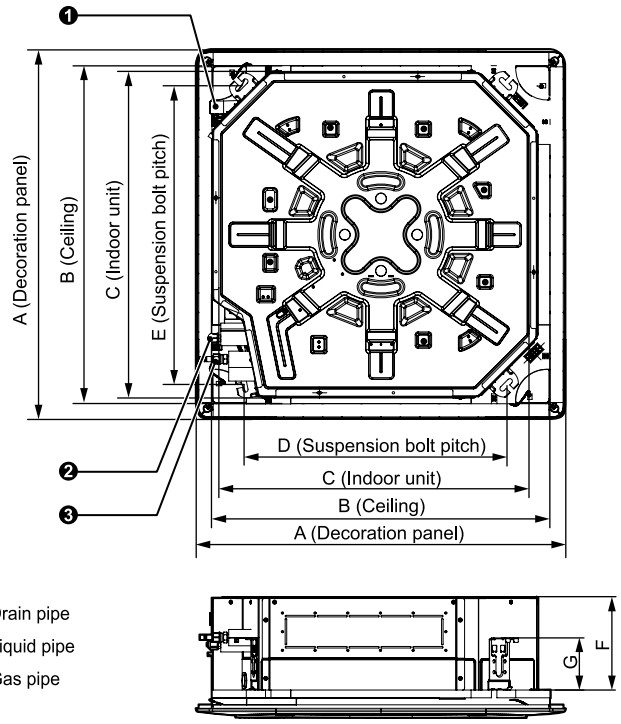

❶ Drain pipe
❷ Liquid pipe
❸ Gas pipe

Unit: mm

Dimensions / Model	A	B	C	D	E	F	G
ASC-24BI2	950	890	840	680	780	200	135
ASC-30BI2							
ASC-36BI2	950	890	840	680	780	240	135
ASC-42BI2							
ASC-48BI2	950	890	840	680	780	290	135
ASC-60BI2							

9.1.2 Installation Location

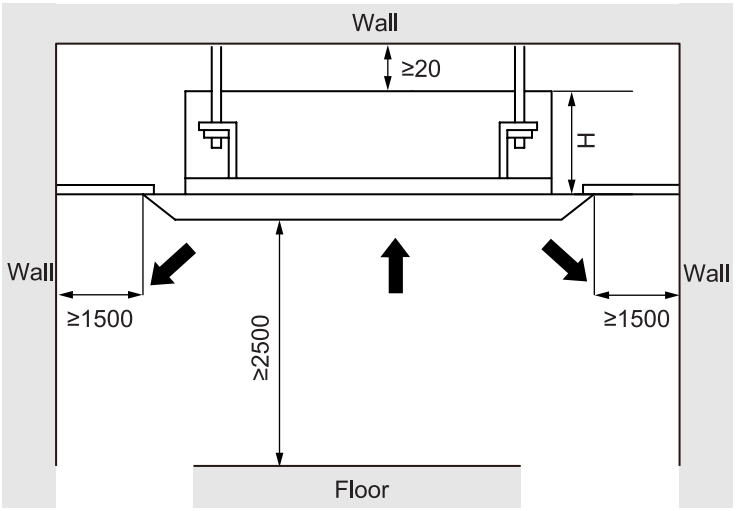

Unit: mm

Model	H(mm)
ASC-12BI2 ASC-18BI2	295
ASC-24BI2 ASC-30BI2	235
ASC-36BI2 ASC-42BI2	275
ASC-48BI2 ASC-60BI2	325

9.2 Duct Type

9.2.1 Dimensions

ASD-12BI2, ASD-18BI2

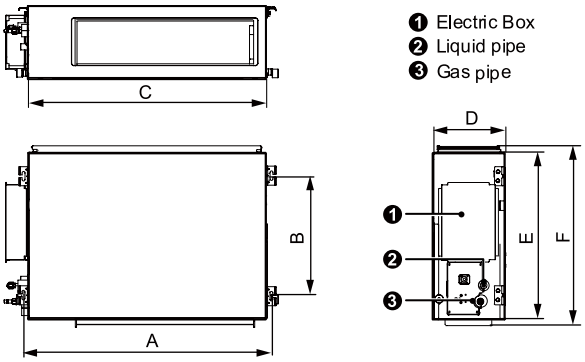

ASD-24BI2; ASD-30BI2; ASD-36BI2; ASD-42BI2; ASD-48BI2; ASD-60BI2

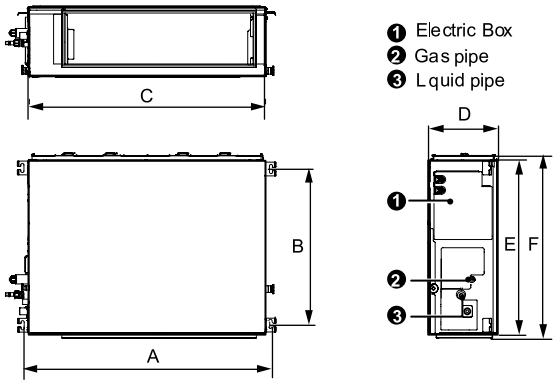

Unit: mm

Model \ Dimensions	A	B	C	D	E	F
ASD-12BI2	760	415	700	200	450	486
ASD-18BI2	1060	415	1000	200	450	486
ASD-24BI2	942	590	900	260	655	692
ASD-30BI2	942	590	900	260	655	692
ASD-36BI2	1381	585	1340	260	655	697
ASD-42BI2	1381	585	1340	260	655	697

Model \ Dimensions	A	B	C	D	E	F
ASD-48BI2	1440	500	1400	300	700	754
ASD-60BI2	1440	500	1400	300	700	754

9.2.2 Installation Location

Unit: mm

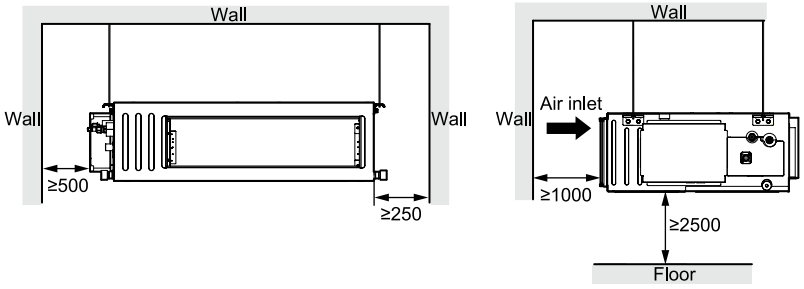

9.3 Floor Ceiling Type

9.3.1 Dimensions

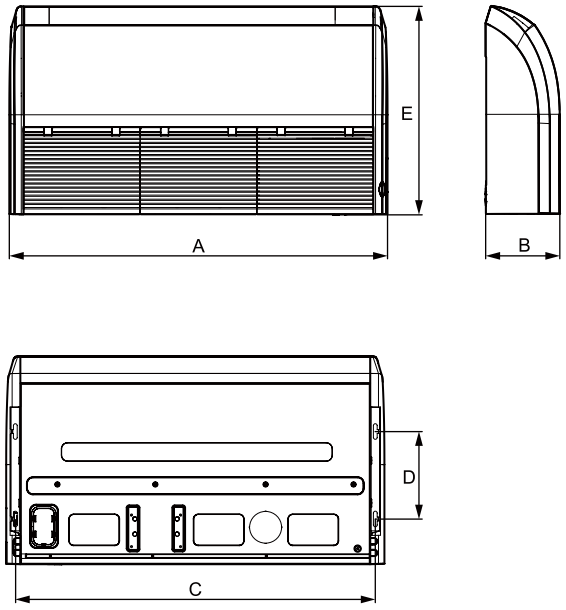

Unit: mm

Model \ Dimensions	A	B	C	D	E
ASF-12BI2	870	235	812	280	665
ASF-18BI2	870	235	812	280	665
ASF-24BI2	1200	235	1142	280	665
ASF-30BI2	1200	235	1142	280	665
ASF-36BI2	1200	235	1142	280	665
ASF-42BI2	1570	235	1512	280	665
ASF-48BI2	1570	235	1512	280	665
ASF-60BI2	1570	235	1512	280	665

9.3.2 Installation Location

Unit: mm

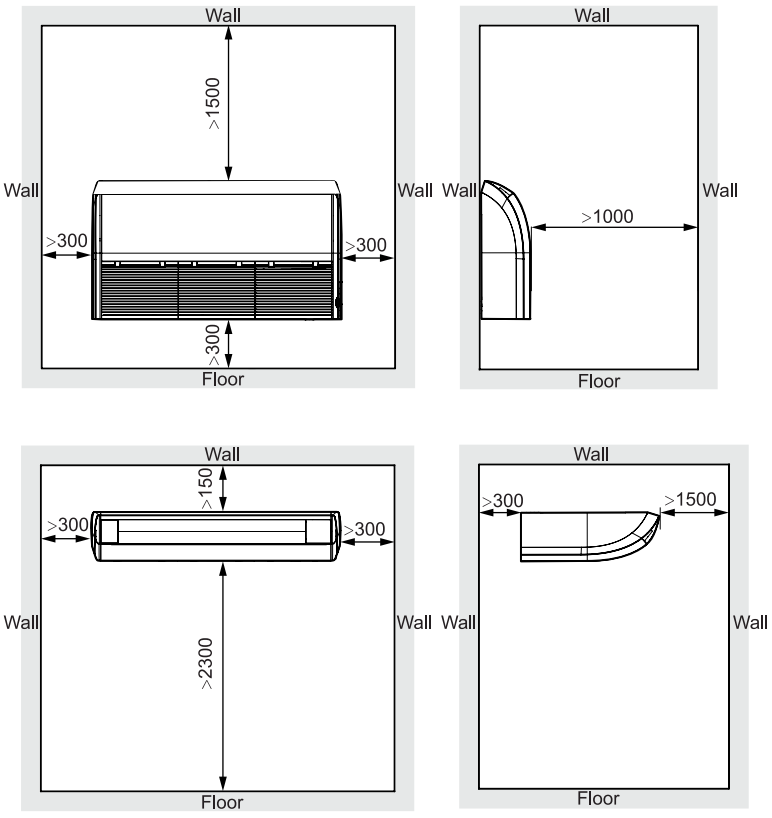

9.4 Outdoor Unit

9.4.1 Dimensions

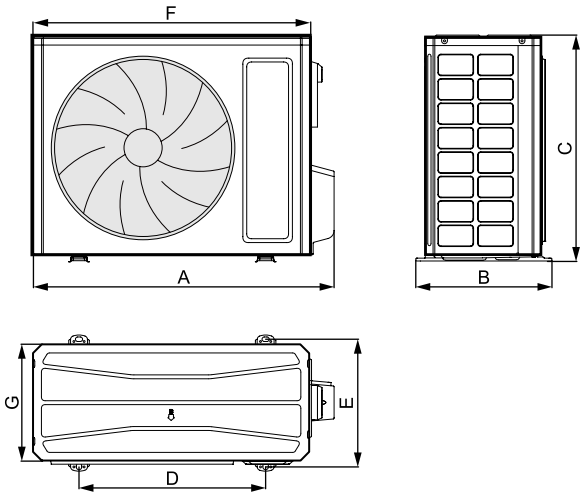

Unit: mm

Model \ Dimensions	A	B	C	D	E	F	G
ASGE-12BI2	732	330	553	455	310	675	285
ASGE-18BI2	802	350	555	512	331	745	300
ASGE-24BI2	958	402	660	570	371	889	340
ASGE-30BI2	958	402	660	570	371	889	340
ASGE-36BI2	1020	427	820	635	396	940	370
ASGE-36BI2-3	1020	427	820	635	396	940	370
ASGE-42BI2	1020	427	820	635	396	940	370
ASGE-42BI2-3	1020	427	820	635	396	940	370
ASGE-48BI2	1020	427	820	635	396	940	370
ASGE-48BI2-3	1020	427	820	635	396	940	370
ASGE-60BI2-3	1070	427	960	755	396	990	370

9.4.2 Installation Location

1) When one outdoor unit is to be installed.

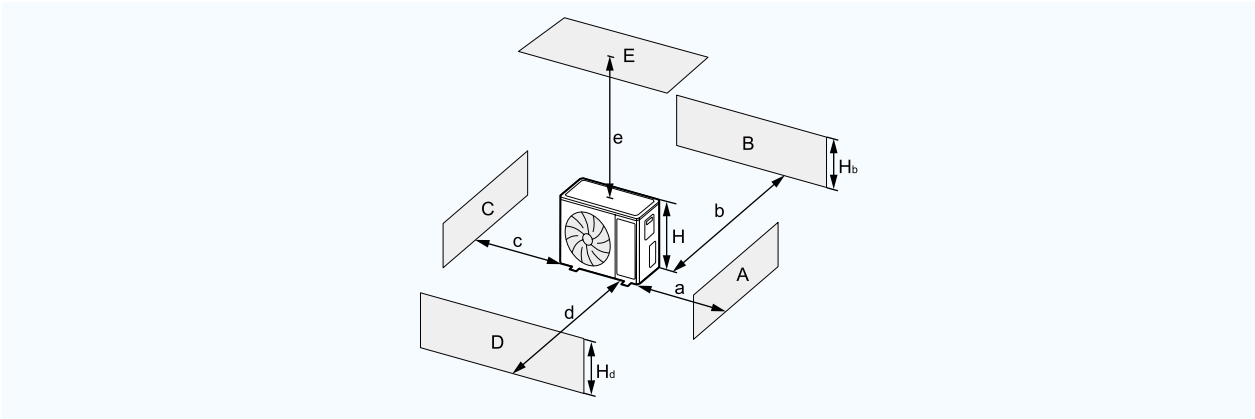

A~E	H_b H_d H		(mm)				
			a	b	c	d	e
B	—		—	≥100	—	—	—
A,B,C,	—		≥300	≥100	≥100	—	—
B,E	—		—	≥100	—	—	≥1000
A,B,C,E	—		≥300	≥150	≥150	—	≥1000
D	—		—	—	—	≥1000	—
D,E	—		—	—	—	≥1000	≥1000
B,D	$H_b<H_d$	$H_d>H$	—	≥100	—	≥1000	—
	$H_b>H_d$	$H_d<H$	—	≥100	—	≥1000	—
B,D,E	$H_b<H_d$	$H_b≤1/2H$	—	≥250	—	≥2000	≥1000
		$1/2H<H_b≤H$	—	≥250	—	≥2000	≥1000
		$H_b>H$	Prohibited				
	$H_b>H_d$	$H_d≤1/2H$	—	≥100	—	≥2000	≥1000
		$1/2H<H_d≤H$	—	≥200	—	≥2000	≥1000
		$H_d>H$	Prohibited				

2) When two or more outdoor units are to be installed side by side.

Unit:mm

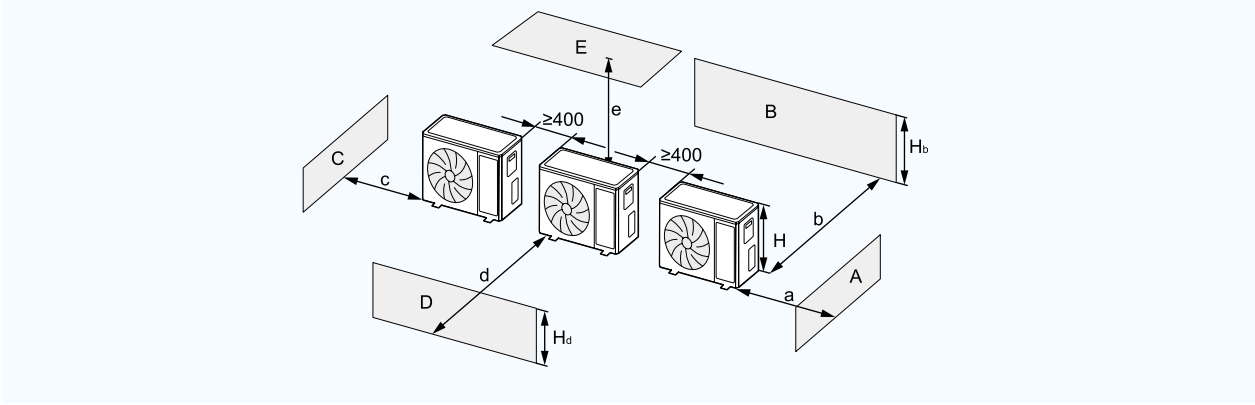

A~E	H_b H_d H		(mm)				
			a	b	c	d	e
A,B,C	—		≥300	≥300	≥1000	—	—
A,B,C,E	—		≥300	≥300	≥1000	—	≥1000
D	—		—	—	—	≥2000	—
D,E	—		—	—	—	≥2000	≥1000
B,D	$H_b<H_d$	$H_d>H$	—	≥300	—	≥2000	—
	$H_b>H_d$	$H_d\leq 1/2H$	—	≥250	—	≥2000	—
		$1/2H<H_d\leq H$	—	≥300	—	≥2500	—
B,D,E	$H_b<H_d$	$H_b\leq 1/2H$	—	≥300	—	≥2000	≥1000
		$1/2H<H_b\leq H$	—	≥300	—	≥2500	≥1000
		$H_b>H$	Prohibited				
	$H_b>H_d$	$H_d\leq 1/2H$	—	≥250	—	≥2500	≥1000
		$1/2H<H_d\leq H$	—	≥300	—	≥2500	≥1000
		$H_d>H$	Prohibited				

3) When outdoor units are installed in rows.

Unit:mm

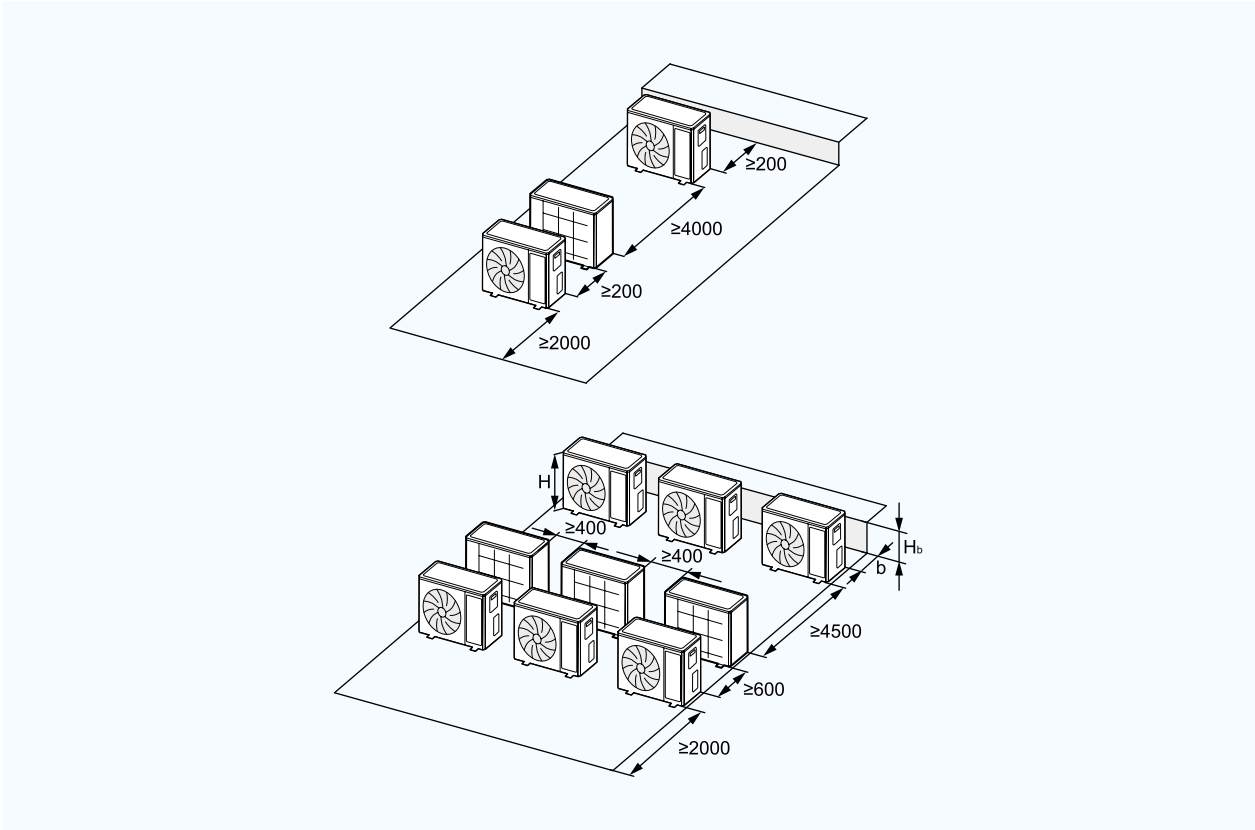

H_b H	(mm)
$H_b\leq 1/2H$	b≥250
$1/2H<H_b\leq H$	b≥300
$H_b>H$	Prohibited

4) When outdoor units are installed one above another.

Unit:mm

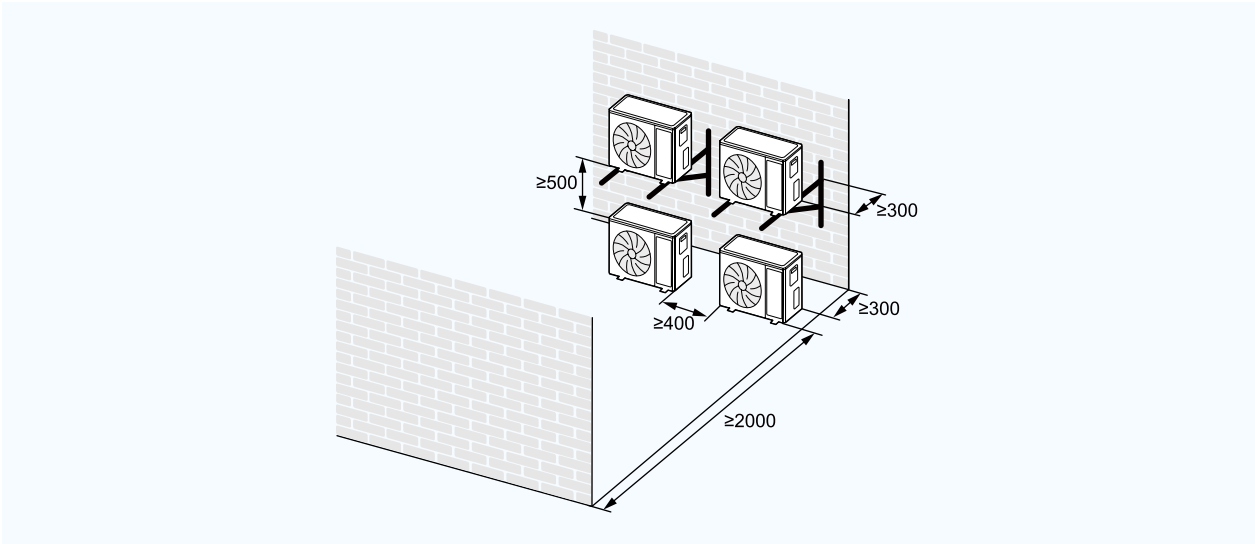

9.5 Controller



YAP1F7



SWC-05/SWC-05W

9.5.1 Dimensional Drawing of YAP1F7

Unit:mm

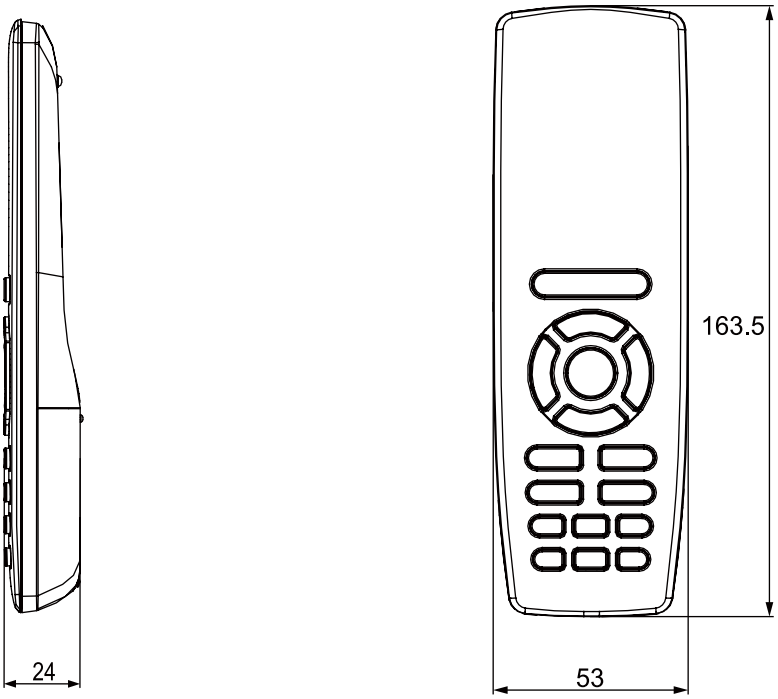

9.5.2 Dimensional Drawing of SWC-05/SWC-05W

Unit:mm

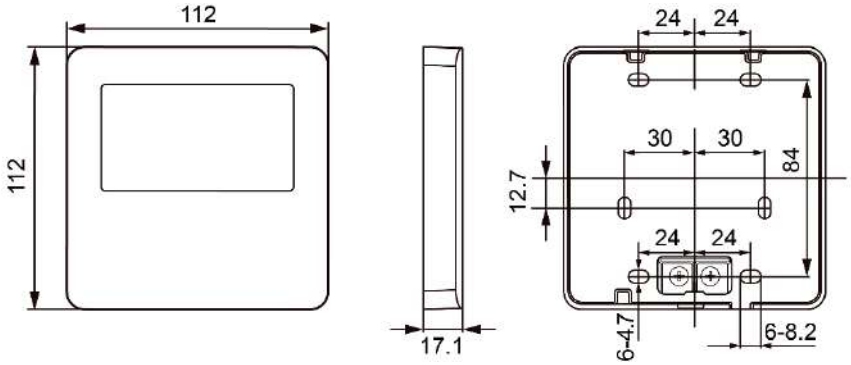

10 ELECTRICAL INSTALLATION

10.1 Electrical Parameters

Model	Power supply	Fuse capacity	Min. sectional area of power cord
	V/Ph/Hz	A	mm²
Indoor unit	220-240V ~50/60Hz	3.15	1.0

Model	Power supply	Circuit breaker capacity	Min. sectional area of power cord
	V/Ph/Hz	A	mm²
ASGE-12BI2	220-240V ~50/60Hz	16	1.5
ASGE-18BI2		16	1.5
ASGE-24BI2		20	2.5
ASGE-30BI2		20	2.5
ASGE-36BI2		32	4.0
ASGE-42BI2		32	4.0
ASGE-48BI2		32	4.0
ASGE-36BI2-3	380-415V 3N~50/60Hz	16	1.5
ASGE-42BI2-3		16	1.5
ASGE-48BI2-3		16	1.5
ASGE-60BI2-3		16	1.5

Notes:

1. Fuse is located on the main board.
2. Install a circuit breaker near the outdoor units with at least 3mm contact gap. The units must be able to be plugged or unplugged.
3. Circuit breaker and power cord specifications listed in the above table are determined based on the maximum power input of the units.
4. Supply cords of parts of appliances for outdoor use shall not be lighter than polychloroprene sheathed flexible cord (code designation 60245 IEC 57).
5. Specifications of circuit breaker are based on a working condition where the working temperature is 40°C. If working condition changes, please adjust the specifications according to applicable local standards.
6. Adopt 1.0mm² power cords between indoor and outdoor units. The maximum length of 12k-30k units is 30m and the maximum length of 36k-60k units is 75m. Please select a proper length according to local conditions. To be in compliance EN 55014, it is necessary to use 8 meters long wire.
7. Adopt 2pcs of 0.75mm² power cords to be the communication cords between wired controller and indoor unit. The maximum length is 30m. Please select a proper length according to local conditions. Communication cords must not be twisted together. To be in compliance EN 55014, it is necessary to use 8 meters long wire.
8. The wire gauge of communication cord should not be less than 0.75mm². It's recommended to use 0.75mm² power cords as the communication cords.

10.2 Wiring Diagram

10.2.1 Cassette Type

Single-phase unit: ASGE-12BI2, ASGE-18BI2, ASGE-24BI2, ASGE-30BI2

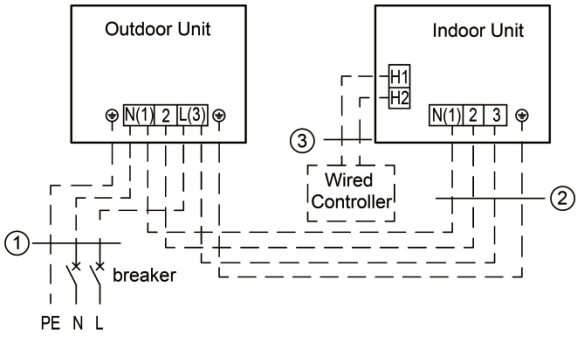

Power:220-240V ~50/60Hz

ASC-12BI2 + ASGE-12BI2
ASC-18BI2 + ASGE-18BI2
① Power cords 3×1.5mm²
② Power cords 4×1.0mm²
③ Communication cords 2×0.75mm²

ASC-24BI2 + ASGE-24BI2
ASC-30BI2 + ASGE-30BI2
① Power cords 3×2.5mm²
② Power cords 4×1.0mm²
③ Communication cords 2×0.75mm²

Single-phase unit: ASGE-36BI2, ASGE-42BI2, ASGE-48BI2

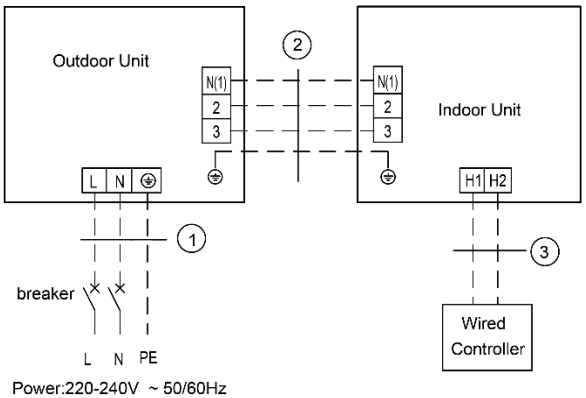

Power:220-240V ~ 50/60Hz

ASC-36BI2 + ASGE-36BI2
ASC-42BI2 + ASGE-42BI2
ASC-48BI2 + ASGE-48BI2
① Power cords 3×4.0mm²
② Power cords 4×1.0mm²
③ Communication cords 2×0.75mm²

Three-phase unit: ASGE-36BI2-3, ASGE-42BI2-3, ASGE-48BI2-3, ASGE-60BI2-3

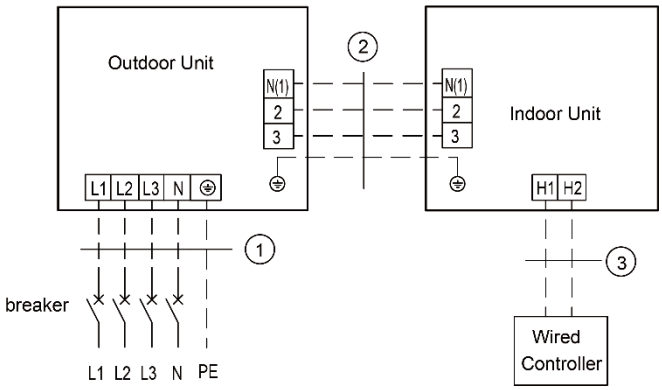

Power:380-415V 3N ~ 50/60Hz

ASC-36BI2 + ASGE-36BI2-3
ASC-42BI2 + ASGE-42BI2-3
ASC-48BI2 + ASGE-48BI2-3
ASC-60BI2 + ASGE-60BI2-3
① Power cords 5×1.5mm²
② Power cords 4×1.0mm²
③ Communication cords 2×0.75mm²

10.2.2 Duct Type

Single-phase unit: ASGE-12BI2, ASGE-18BI2

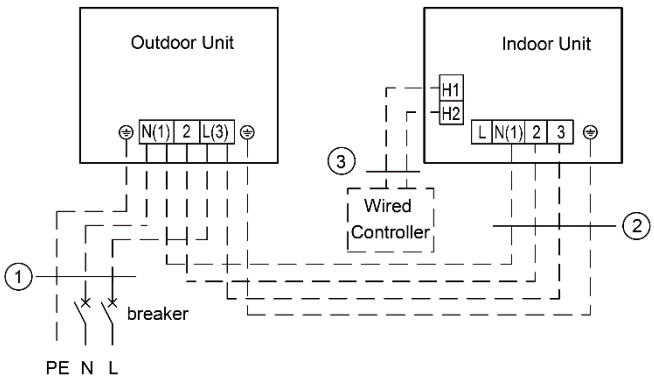

Power:220-240V ~50/60Hz

ASD-12BI2 + ASGE-12BI2
ASD-18BI2 + ASGE-18BI2
① Power cords 3×1.5mm²
② Power cords 4×1.0mm²
③ Communication cords 2×0.75mm²

Single-phase unit: ASGE-24BI2, ASGE-30BI2

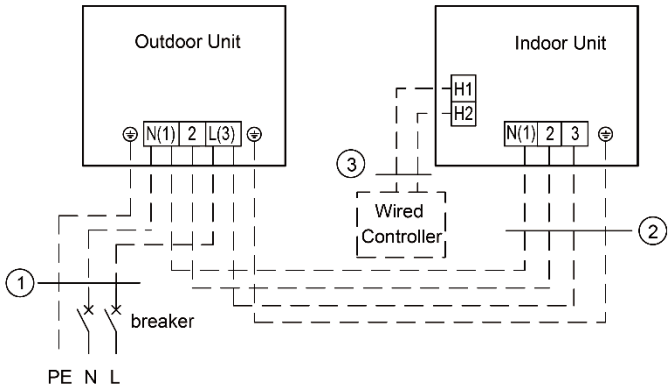

Power:220-240V ~50/60Hz

ASD-24BI2 + ASGE-24BI2
ASD-30BI2 + ASGE-30BI2
① Power cords 3×2.5mm²
② Power cords 4×1.0mm²
③ Communication cords 2×0.75mm²

Single-phase unit: ASGE-36BI2, ASGE-42BI2, ASGE-48BI2

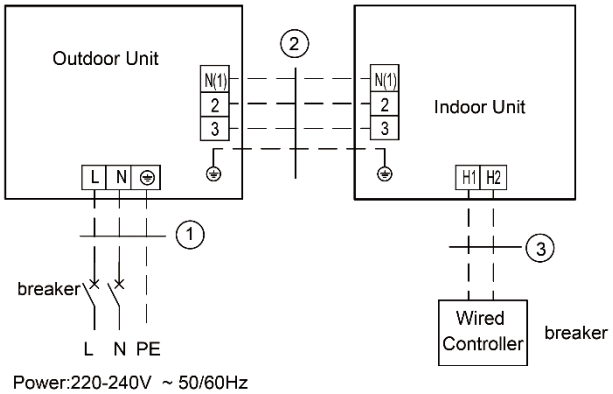

Power:220-240V ~ 50/60Hz

ASD-36BI2 + ASGE-36BI2
ASD-42BI2 + ASGE-42BI2
ASD-48BI2 + ASGE-48BI2
① Power cords 3×4.0mm²
② Power cords 4×1.0mm²
③ Communication cords 2×0.75mm²

Three-phase unit: ASGE-30BI2-3, ASGE-36BI2-3, ASGE-48BI2-3, ASGE-60BI2-3

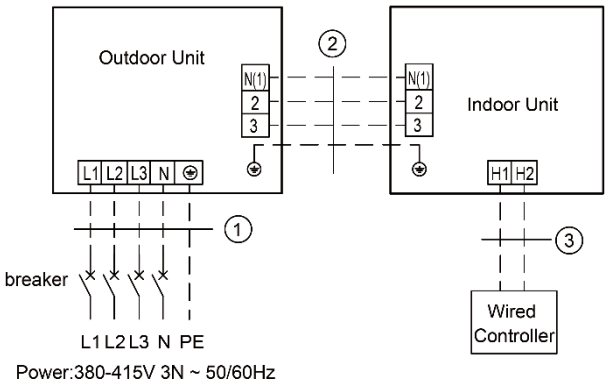

ASD-36BI2 + ASGE-36BI2-3
ASD-42BI2 + ASGE-42BI2-3
ASD-48BI2 + ASGE-48BI2-3
ASD-60BI2 + ASGE-60BI2-3
① Power cords 5×1.5mm²
② Power cords 4×1.0mm²
③ Communication cords 2×0.75mm²

10.2.3 Floor Ceiling Type

Single-phase unit: ASF-12BI2, ASF-18BI2, ASF-24BI2, ASF-30BI2

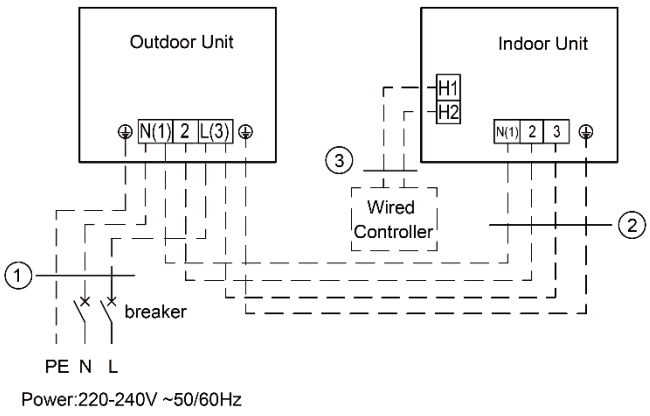

ASF-12BI2 + ASGE-12BI2
ASF-18BI2 + ASGE-18BI2
① Power cords 3×1.5mm²
② Power cords 4×1.0mm²
③ Communication cords 2×0.75mm²

ASF-24BI2 + ASGE-24BI2
ASF-30BI2 + ASGE-30BI2
① Power cords 3×2.5mm²
② Power cords 4×1.0mm²
③ Communication cords 2×0.75mm²

Single-phase unit: ASGE-36BI2, ASGE-42BI2, ASGE-48BI2

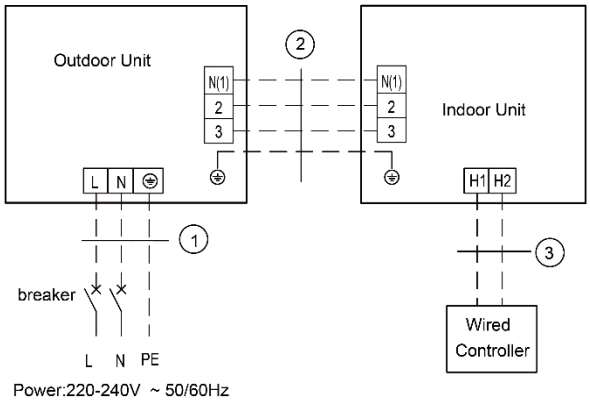

ASF-36BI2 + ASGE-36BI2
ASF-42BI2 + ASGE-42BI2
ASF-48BI2 + ASGE-48BI2
① Power cords 3×4.0mm²
② Power cords 4×1.0mm²
③ Communication cords 2×0.75mm²

Three-phase unit: ASGE-36BI2-3, ASGE-42BI2-3, ASGE-48BI2-3, ASGE-60BI2-3

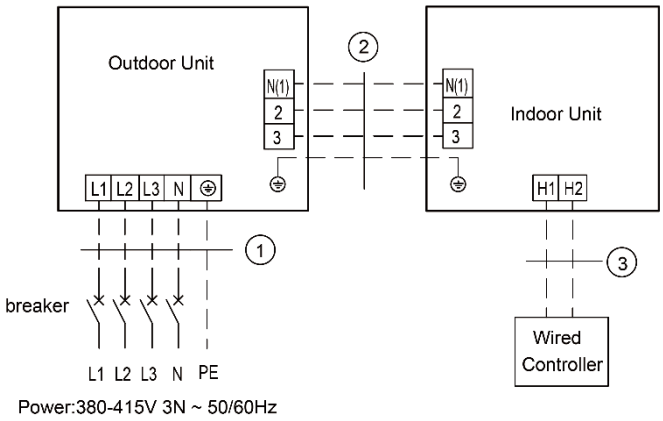

ASF-36BI2 + ASGE-36BI2-3
ASF-42BI2 + ASGE-42BI2-3
ASF-48BI2 + ASGE-48BI2-3
ASF-60BI2 + ASGE-60BI2-3
① Power cords 5×1.5mm²
② Power cords 4×1.0mm²
③ Communication cords 2×0.75mm²

11 LIST OF STANDARD AND OPTIONAL PARTS

—	Cassette type	Duct type	Floor ceiling type
Wired Controller SWC-05	○	○	○
Wired Controller SWC-05W (WIFI)	○	○	○
Wired controller with timer SWC-07	○	○	○
Remote Controller YAP1F7(WiFi)	○	○	○
Modbus gate SMG-01	○	○	○
Dry contact gateway SDG-02	○	○	○
Centralized Controller SCC-36	○	○	○

Sinclair reserves the right to modify the specifications without prior notice. Please confirm the final specifications with our local distributor.

NOTE CONCERNING PROTECTION OF ENVIRONMENT



This product must not be disposed of via normal household waste after its service life, but must be taken to a collection station for the recycling of electrical and electronic devices. The symbol on the product, the operating instructions or the packaging indicate such disposal procedures. The materials are recyclable in accordance with their respective symbols. By means of re-use, material recycling or any other form of recycling old appliances you are making an important contribution to the protection of our environment. Please ask your local council where your nearest disposal station is located.

INFORMATION CONCERNING USED REFRIGERANT MEDIUM

This unit is containing fluorinated gases included in the Kyoto protocol.
The maintenance and the liquidation must be carried out by qualified personnel.

Type of refrigerant: R32
The quantity of the refrigerant: Please see the unit label.
The value GWP: 675 (1 kg R32 = 0,675 t CO_2 eq)
GWP = Global Warming Potential

 Appliance filled with flammable gas R32.

In case of quality problem or other please contact your local supplier or authorized service center.
Emergency number: 112

PRODUCER

SINCLAIR CORPORATION Ltd.
16 Great Queen Street
WC2B 5AH London
United Kingdom
www.sinclair-world.com

This product was manufactured in China (Made in China).

REPRESENTATIVE

SINCLAIR Global Group s.r.o.
Purkynova 45
612 00 Brno
Czech Republic

TECHNICAL SUPPORT

SINCLAIR Global Group s.r.o.
Purkynova 45
612 00 Brno
Czech Republic
Tel.: +420 800 100 285 | Fax: +420 541 590 124
www.sinclair-solutions.com | info@sinclair-solutions.com

CE


sinclair
AIR CONDITIONING