Service Manual

Ver. 01 | 21-04-2021

EN



KEYON
SERIES

SIH + SOH-24BIK

sinclair
AIR CONDITIONING

„ORIGINAL INSTRUCTIONS“

IMPORTANT NOTE:

Read this manual carefully before installing or operating your new air conditioning unit.
Make sure to save this manual for future reference.

EN For downloading manual for this product, please enter the model name at this link:

CZ Pro stažení manuálu k tomuto produktu zadejte modelové označení do následujícího odkazu:

SK Pre stiahnutie manuálu k tomuto produktu zadajte modelové označenie do nasledujúceho odkazu:

DE Um das Handbuch für dieses Produkt herunterzuladen, geben Sie bitte den Modellnamen für diesen Link ein:

HR Za preuzimanje priručnika za ovaj proizvod unesite naziv modela na ovu vezu:

HU Termék kézikönyvének letöltéséhez írja be a modell megnevezését az alábbi linkre:

SL Za prenos navodil za uporabo tega izdelka, vnesite ime modela na tej povezavi:

RU Чтобы загрузить руководство для этого продукта, введите обозначение модели по следующей ссылке:

IT Per scaricare il manuale di questo prodotto, inserisci il nome del modello a questo link:

ES Para descargar el manual de este producto, ingrese la designación del modelo en el siguiente enlace:

Table of Contents

Part Ⅰ : Technical Information 1

1. Summary 1

2. Specifications 2

2.1 Specification Sheet 2

2.2 Capacity Variation Ratio According to Temperature 4

2.3 Cooling and Heating Data Sheet in Rated Frequency 4

2.4 Noise Curve 5

3. Outline Dimension Diagram 6

3.1 Indoor Unit 6

3.2 Outdoor Unit 7

4. Refrigerant System Diagram 8

5. Electrical Part 9

5.1 Wiring Diagram 9

5.2 PCB Printed Diagram 12

6. Function and Control 14

6.1 Remote Controller Introduction 14

6.2 Brief Description of Models and Functions 17

6.3 Ewpe Smart App Operation Manua 20

7. Notes for Installation and Maintenance 21

Part Ⅱ : Installation and Maintenance 21

8. Installation 26

8.1 Installation Dimension Diagram 26

8.2 Installation Parts-checking 28

8.3 Selection of Installation Location 28

8.4 Electric Connection Requirement 28
8.5 Installation of Indoor Unit 29
8.6 Installation of Outdoor unit 31
8.7 Vacuum Pumping and Leak Detection 32
8.8 Check after Installation and Test operation 33
9. Maintenance 34
9.1 Error Code List 34
9.2 Procedure of Troubleshooting 39
9.3 Troubleshooting for Normal Malfunction 53
10. Exploded View and Parts List 55
10.1 Indoor Unit 55
10.2 Outdoor Unit 57
11. Removal Procedure 59
11.1 Removal Procedure of Indoor Unit 59
11.2 Removal Procedure of Outdoor Unit 64
Appendix 69
Appendix 1: Reference Sheet of Celsius and Fahrenheit 69
Appendix 2: Configuration of Connection Pipe 69
Appendix 3: Pipe Expanding Method 70
Appendix 4: List of Resistance for Temperature Sensor 71

1. Summary

Indoor Unit:

SIH-24BIK



Remote Controller:



YAA1FB6(WiFi)

Model list:

No.	Model	Indoor model	Indoor product code	Outdoor model	Outdoor product code	Remote Controller
1	SIH+SOH-24BIK	SIH-24BIK	CB532N01300	SOH-24BIK	CB532W01300	YAA1FB6 (WiFi)
2						
3						

2. Specifications

2.1 Specification Sheet

Model			SIH+SOH-24BIK
Power Supply	Rated Voltage	V~	220-240
	Rated Frequency	Hz	50
	Phases		1
Power Supply Mode			Outdoor
Cooling Capacity		W	6200
Heating Capacity		W	6500
Cooling Power Input		W	1771
Heating Power Input		W	1646
Cooling Current Input		A	7.9
Heating Current Input		A	7.3
Rated Input		W	2200
Rated Cooling Current		A	9.7
Rated Heating Current		A	10
Air Flow Volume		m^3/h	1100/950/750/650
Dehumidifying Volume		L/h	1.80
EER		W/W	3.50
COP		W/W	3.95
SEER		--	6.8
SCOP (Warmer/Average/Colder)		--	5.1/4.0/-
Application Area		m^2	23-34
Indoor Unit	Model		SIH-24BIK
	Product Code		CB532N01300
	Fan Type		Cross-flow
	Fan Diameter Length(DXL)	mm	Φ108X803
	Cooling Speed	r/min	1250/1150/950/850
	Heating Speed	r/min	1250/1150/1000/900
	Fan Motor Power Output	W	35
	Fan Motor RLA	A	0.50
	Fan Motor Capacitor	μF	3
	Evaporator Form		Aluminum Fin-copper Tube
	Evaporator Pipe Diameter	mm	Φ7
	Evaporator Row-fin Gap	mm	/
	Evaporator Coil Length (LXDXW)	mm	850X25.4X342.9
	Swing Motor Model		MP35CP/MP24HF
	Swing Motor Power Output	W	2.5/1.5
	Fuse Current	A	3.15
	Sound Pressure Level	dB (A)	Cooling:47/44/38/35 Heating:48/45/40/36
	Sound Power Level	dB (A)	Cooling:61/58/52/49 Heating:61/58/53/49
	Dimension (WXHXD)	mm	1081X325X248
	Dimension of Carton Box (LXWXH)	mm	1127X397X324
	Dimension of Package (LXWXH)	mm	1137X407X334
	Net Weight	kg	16.5
	Gross Weight	kg	19.5

Outdoor Unit	Outdoor Unit Model		SOH-24BIK
	Outdoor Unit Product Code		CB532W01300
	Compressor Manufacturer		ZHUHAI LANDA COMPRESSOR CO.,LTD
	Compressor Model		FTz-SM151AXBD
	Compressor Oil		FW68DA
	Compressor Type		Rotary
	Compressor LRA.	A	/
	Compressor RLA	A	6.06
	Compressor Power Input	W	1330
	Compressor Overload Protector		/
	Throttling Method		Capillary
	Set Temperature Range	ºC	16~30
	Cooling Operation Ambient Temperature Range	ºC	-15~43
	Heating Operation Ambient Temperature Range	ºC	-15~24
	Condenser Form		Aluminum Fin-copper Tube
	Condenser Pipe Diameter	mm	Φ7.94
	Condenser Rows-fin Gap	mm	2-1.4
	Condenser Coil Length (LXDXW)	mm	848X38.1X528
	Fan Motor Speed	rpm	900
	Output of Fan Motor	W	40
	Fan Motor RLA	A	0.70
	Fan Motor Capacitor	μF	/
	Heater Power Input	W	/
	Outdoor Unit Air Flow Volume	m^3/h	2800
	Fan Type		Axial-flow
	Fan Diameter	mm	Φ445
	Defrosting Method		Automatic Defrosting
	Climate Type		T1
	Isolation		I
	Moisture Protection		IPX4
	Permissible Excessive Operating Pressure for the Discharge Side	MPa	4.3
	Permissible Excessive Operating Pressure for the Suction Side	MPa	2.5
	Sound Pressure Level (H/M/L)	dB (A)	58/-/-
	Sound Power Level (H/M/L)	dB (A)	67 /-/-
	Dimension(WXHXD)	mm	873X555X376
	Dimension of Carton Box (LXWXH)	mm	948X428X591
	Dimension of Package(LXWXH)	mm	951X431X620
	Net Weight	kg	36.5
	Gross Weight	kg	39.5
	Refrigerant		R32
	Refrigerant Charge	kg	1.3
Connection Pipe	Connection Pipe Length	m	5
	Connection Pipe Gas Additional Charge	g/m	16
	Outer Diameter Liquid Pipe	inch	1/4
	Outer Diameter Gas Pipe	inch	1/2
	Max Distance Height	m	10
	Max Distance Length	m	25
	Note: The connection pipe applies metric diameter.		

The above data is subject to change without notice. Please refer to the nameplate of the unit.

2.2 Capacity Variation Ratio According to Temperature

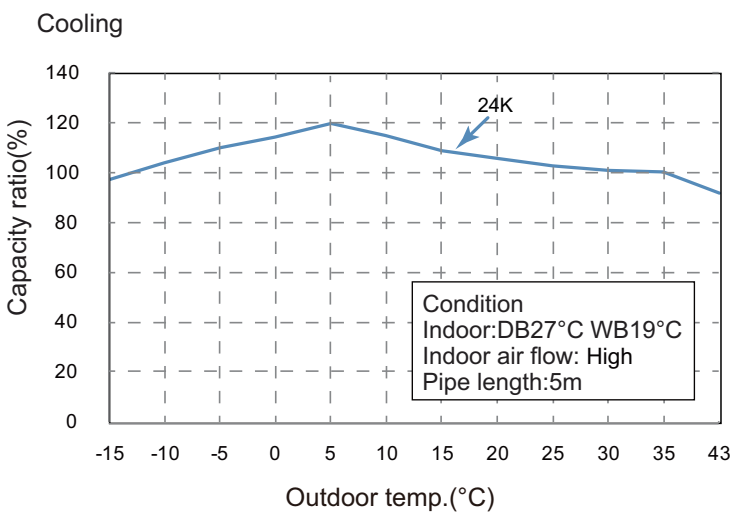

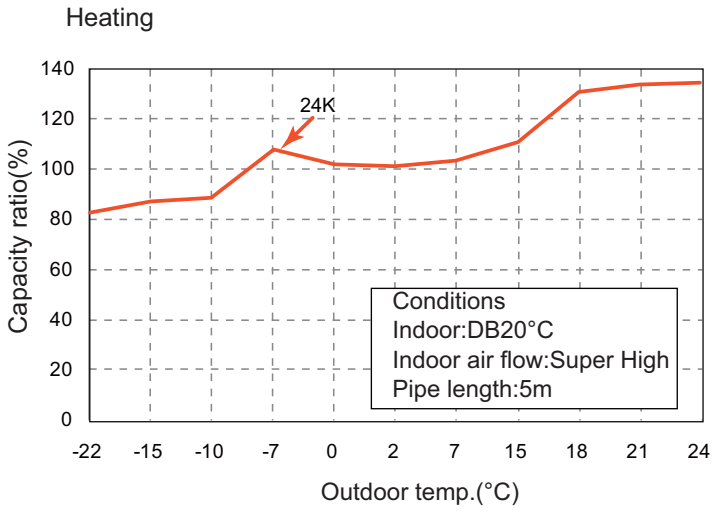

2.3 Cooling and Heating Data Sheet in Rated Frequency

Cooling:

Rated cooling condition(°C) (DB/WB)		Model	Pressure of gas pipe connecting indoor and outdoor unit	Inlet and outlet pipe temperature of heat exchanger		Fan speed of indoor unit	Fan speed of outdoor unit
Indoor	Outdoor		P (MPa)	T1 (°C)	T2 (°C)		
27/19	35/24	SIH+SOH-24BIK	0.8 ~ 1.0	10 to 12	72 to 40	TURBO	High

Heating:

Rated cooling condition(°C) (DB/WB)		Model	Pressure of gas pipe connecting indoor and outdoor unit	Inlet and outlet pipe temperature of heat exchanger		Fan speed of indoor unit	Fan speed of outdoor unit
Indoor	Outdoor		P (MPa)	T1 (°C)	T2 (°C)		
20/-	7/6	SIH+SOH-24BIK	2.2~ 2.4	70 to 40	1 to 5	TURBO	High

Instruction:
T1: Inlet and outlet pipe temperature of evaporator
T2: Inlet and outlet pipe temperature of condenser
P: Pressure at the side of big valve
Connection pipe length: 5 m.

2.4 Noise Curve

Indoor side noise when blowing

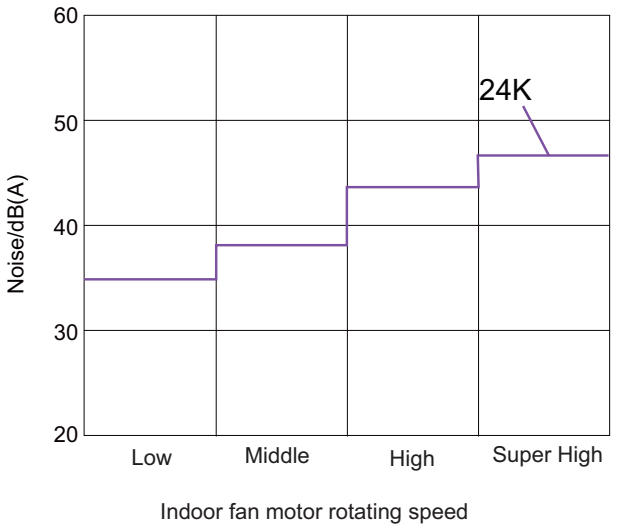

Indoor fan motor rotating speed

Outdoor side noise

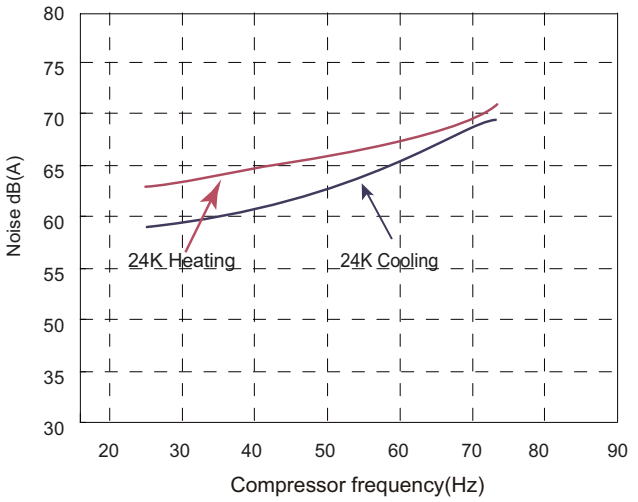

3. Outline Dimension Diagram

3.1 Indoor Unit

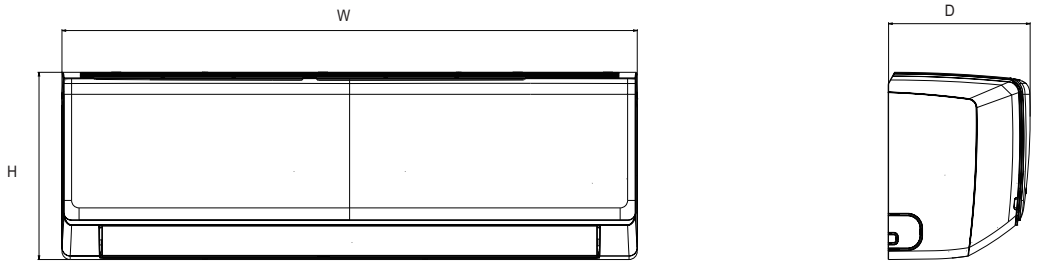

SIH-24BIK

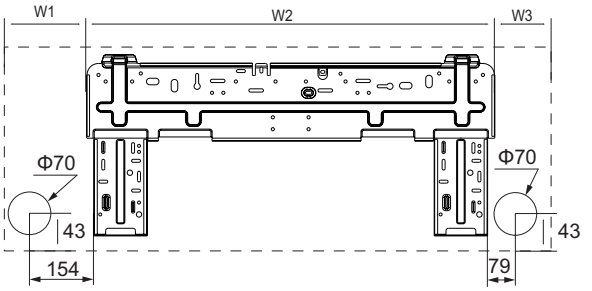

Unit:mm

Models	W	H	D	W1	W2	W3
SIH-24BIK	1081	325	248	207	685	189

3.2 Outdoor Unit

SOH-24BIK

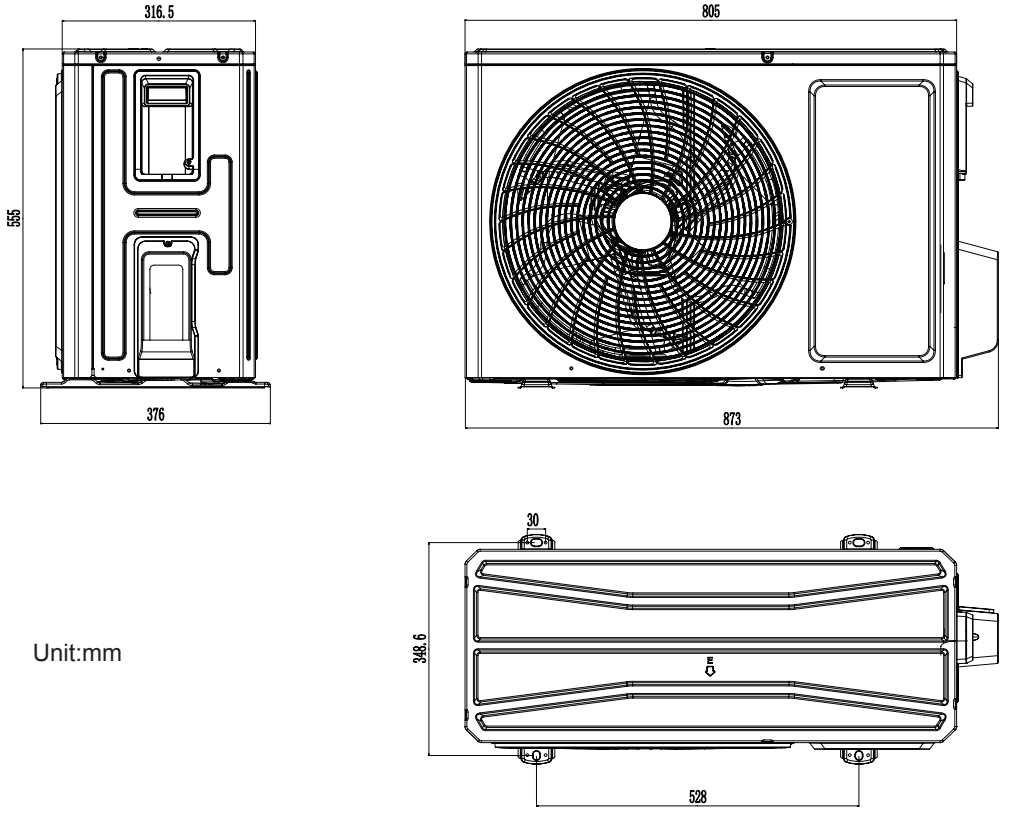

Unit:mm

4. Refrigerant System Diagram

SIH+SOH-24BIK

Cooling and heating model

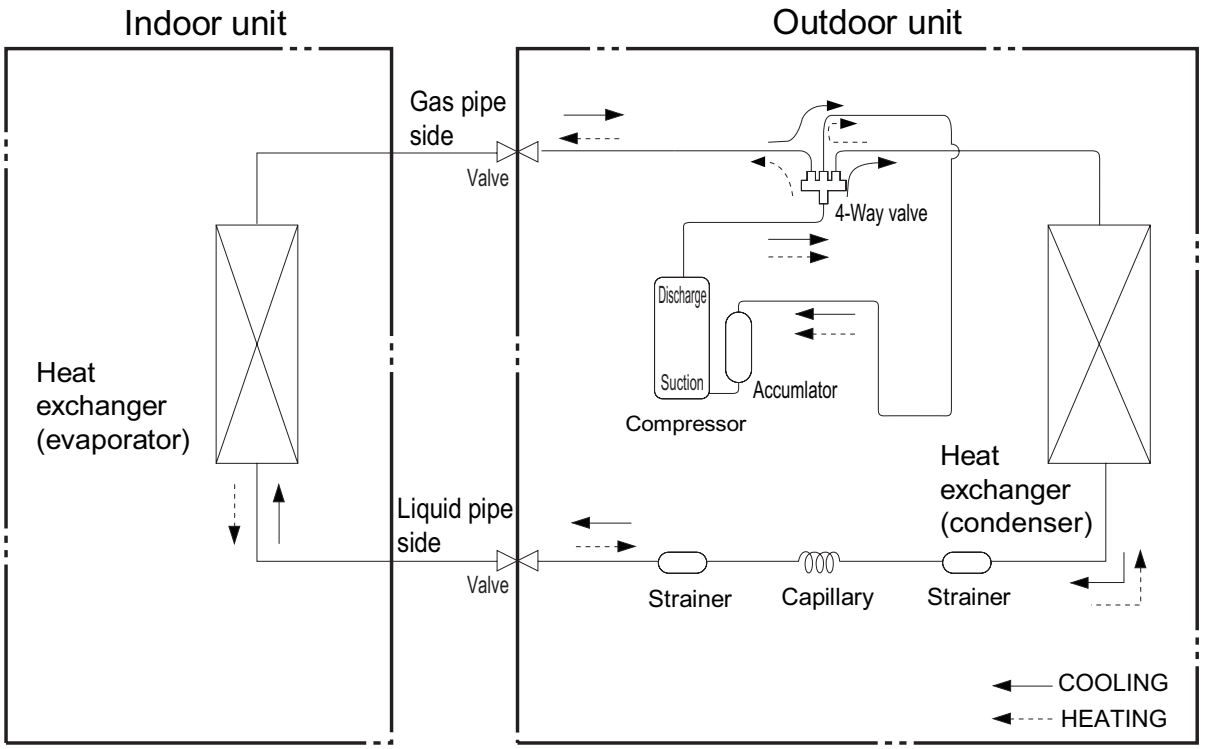

Connection pipe specification:
Liquid pipe:1/4"
Gas pipe:1/2" SIH+SOH-24BIK

5. Electrical Part

5.1 Wiring Diagram

●Instruction

Symbol	Symbol Color
WH	White
YE	Yellow
RD	Red
YEGN	Yellow/Green
VT	Violet

Symbol	Symbol Color
GN	Green
BN	Brown
BU	Blue
BK	Black
OG	Orange

Symbol	Name
CAP	Jumper cap
COMP	Compressor
⏚	Grounding wire
/	/
/	/

Note: Jumper cap is used to determine fan speed and the swing angle of horizontal lover for this model.

SIH-24BIK

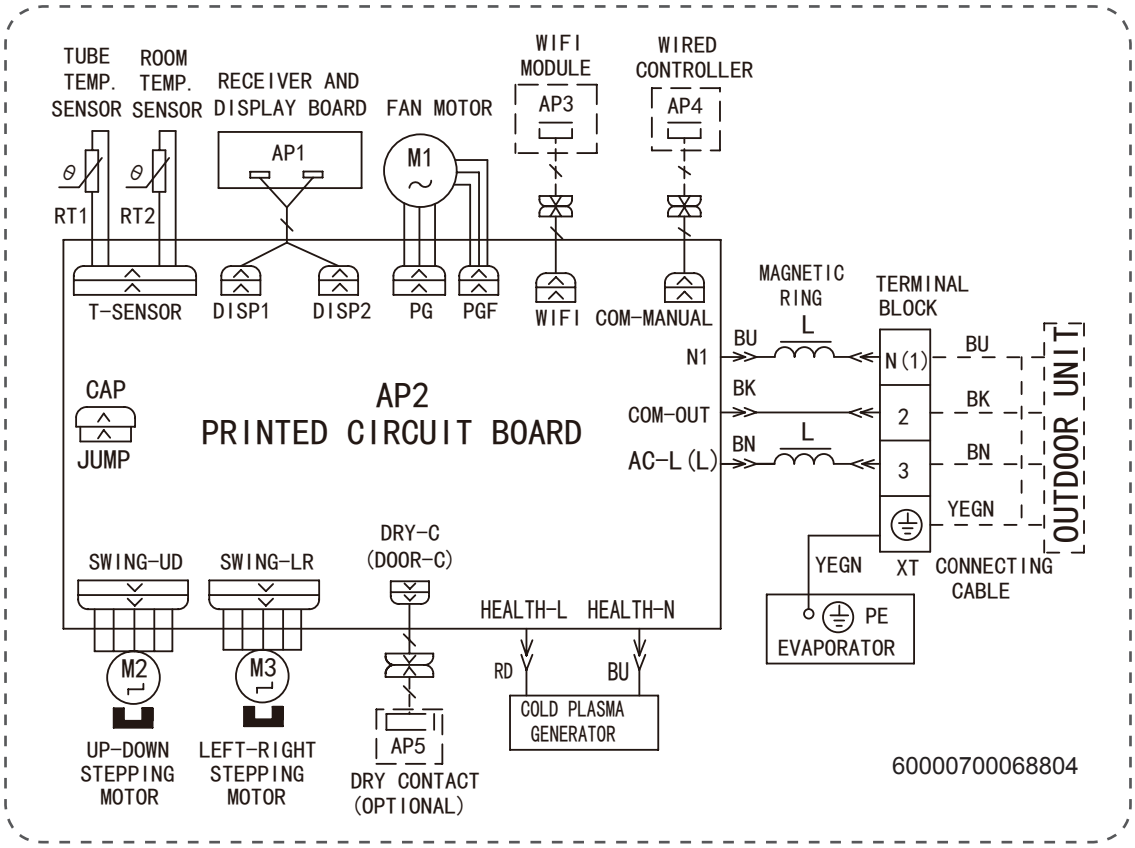
TUBE TEMP. SENSOR
ROOM TEMP. SENSOR
RECEIVER AND DISPLAY BOARD
FAN MOTOR
WIFI MODULE
AP3
WIRED CONTROLLER
AP4
AP1
M1
RT1
RT2
T-SENSOR
DISP1
DISP2
PG
PGF
WIFI
COM-MANUAL
MAGNETIC RING
L
TERMINAL BLOCK
BU
N1
N(1)
BU
BK
COM-OUT
2
BK
BN
AC-L(L)
3
BN
YEGN
CAP
JUMP
AP2
PRINTED CIRCUIT BOARD
OUTDOOR UNIT
SWING-UD
SWING-LR
DRY-C (DOOR-C)
HEALTH-L
HEALTH-N
YEGN
XT
CONNECTING CABLE
PE
EVAPORATOR
RD
BU
COLD PLASMA GENERATOR
M2
M3
AP5
UP-DOWN STEPPING MOTOR
LEFT-RIGHT STEPPING MOTOR
DRY CONTACT (OPTIONAL)
60000700068804

● **Outdoor Unit**

SOH-24BIK

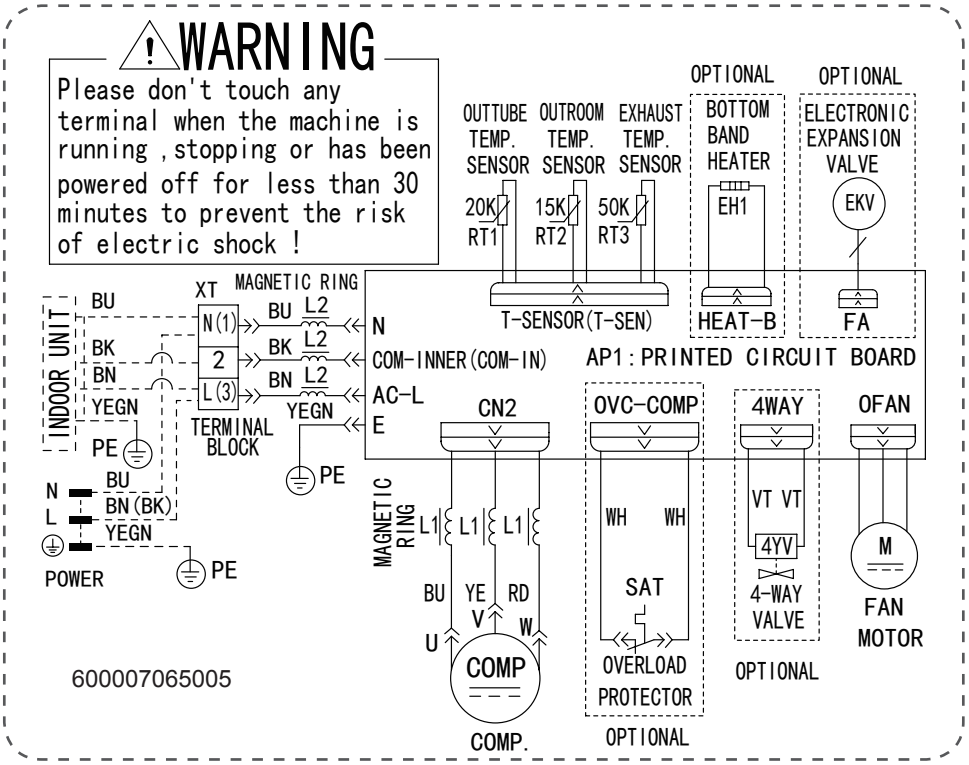

5.2 PCB Printed Diagram

Indoor Unit

SIH-24BIK

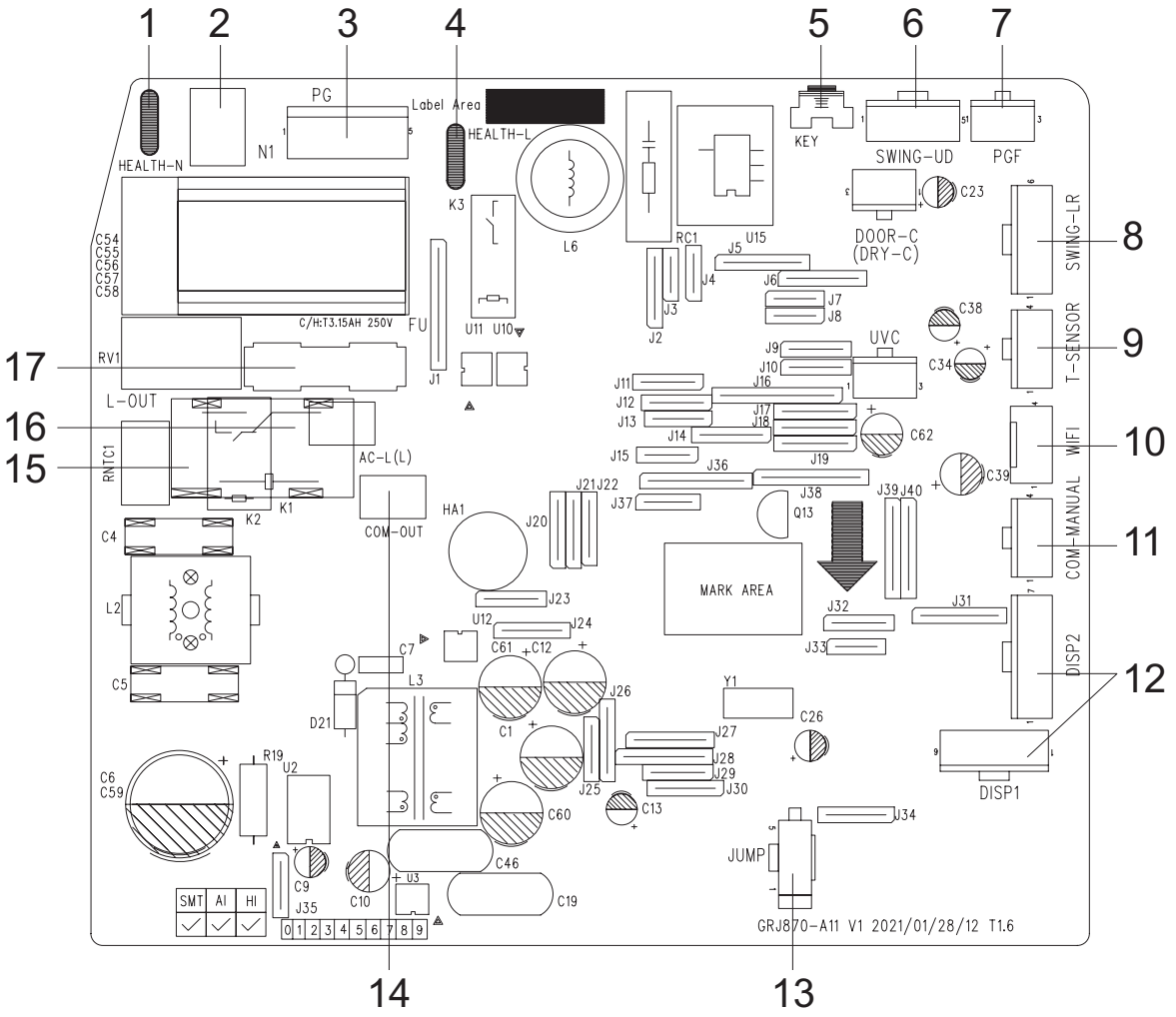

No.	Name
1	Interface of health function neutral wire
2	Neutral wire terminal
3	Motor terminal
4	Interface of health function live wire
5	Auto button
6	Up&down swing terminal
7	Interface of Motor feedback
8	Left&right swing terminal
9	Terminal of temperature sensor

No.	Name
10	WIFI terminal
11	Wired controller terminal
12	Interface of display board
13	Jumper cap
14	Communication terminal for indoor unit and outdoor unit
15	Live wire terminal
16	Fuse
17	Terminal of live wire used for supplying power for outdoor unit

Outdoor Unit

SOH-24BIK

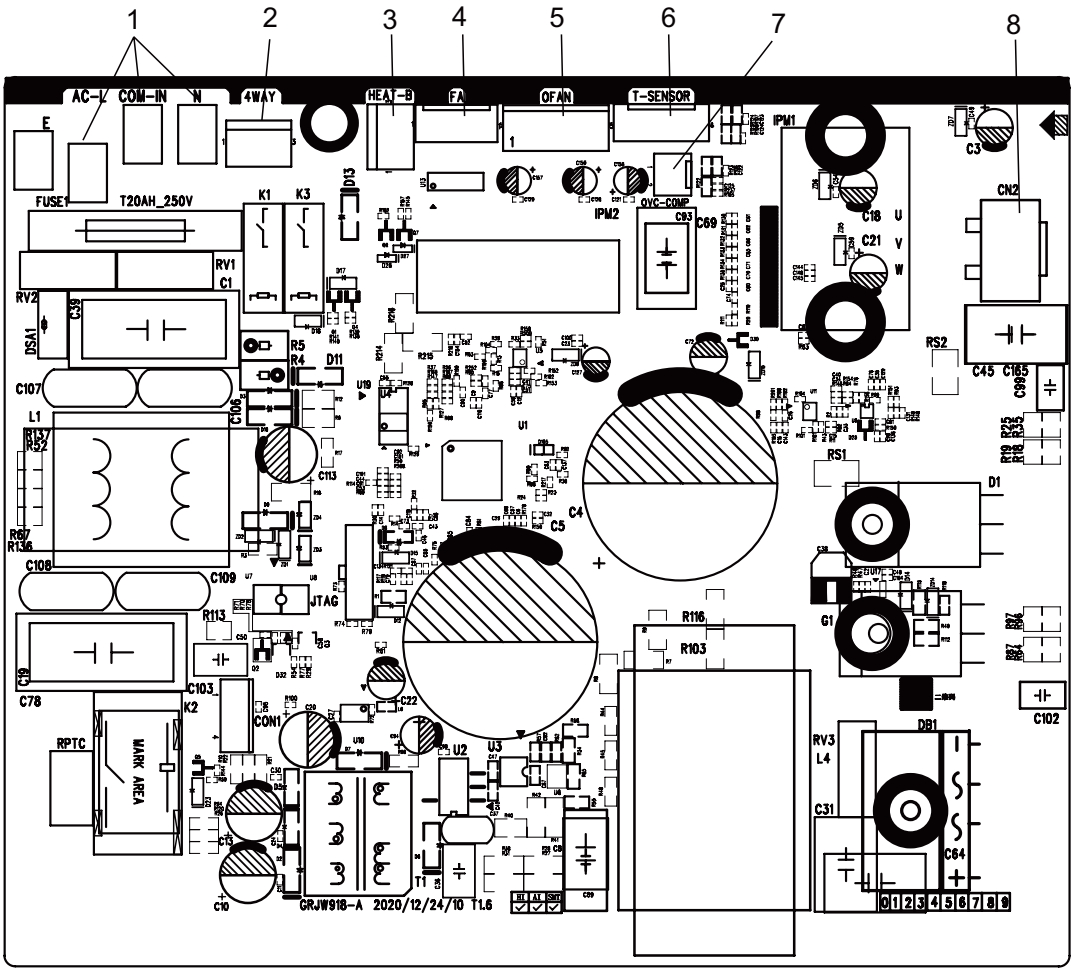

No.	Name
1	Neutral wire, live wire and communication cable
2	4-way valve
3	electric heating belt of chasssis
4	Electronic expansion valve
5	Outdoor fan
6	Temperature sensor
7	Overload
8	Three-phase terminal of compressor

6. Function and Control

6.1 Remote Controller Introduction

YAA1FB6(WiFi)

Buttons on remote controller

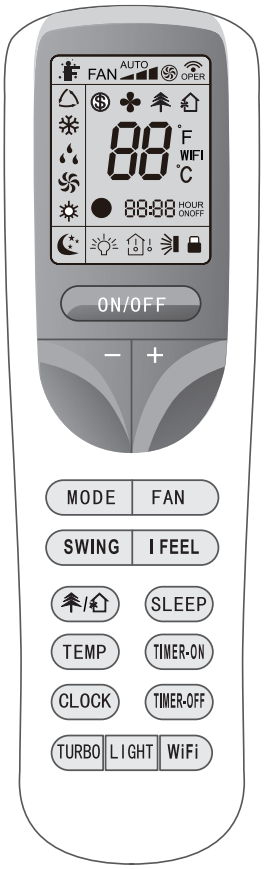

Introduction for icons on display screen

		I feel
FAN AUTO		Set fan speed
		Turbo mode
		Send signal
Operation mode		Auto mode
		Cool mode
		Dry mode
		Fan mode
		Heat mode
		Sleep mode
		8°C heating function
		Health mode
		Scavenging function
		Quiet
		X-FAN function
Temp. display type		Set temp.
		Indoor ambient temp.
		Outdoor ambient temp.
		Clock
88		Set temperature
WiFi		WiFi function
88:88		Set time
ONOFF		TIMER ON / TIME OFF
		Light
		Left & right swing
		Up & down swing
		Child lock

Introduction for buttons on remote controller

NOTE:

● This is a general use remote controller, it could be used for the air conditioners with multifunction; For some function, which the model doesn't have, if press the corresponding button on the remote controller that the unit will keep the original running status.

● After putting through the power, the air conditioner will give out a sound. Power indicator "⏻" is ON (red indicator, the colour is different for different models). After that, you can operate the air conditioner by using remote controller.

● Under on status, pressing the button on the remote controller, the signal icon "((" on the display of remote controller will blink once and the air conditioner will give out a "di" sound, which means the signal has been sent to the air conditioner.

ON/OFF button

Press this button to turn on the unit. Press this button again to turn off the unit.

− button

Press this button to decrease set temperature. Holding it down above 2 seconds rapidly decreases set temperature. In Auto mode, set temperature is not adjustable.

+ button

Press this button to increase set temperature. Holding it down above 2 seconds rapidly increases set temperature. In Auto mode, set temperature is not adjustable.

MODE button

Each time you press this button, a mode is selected in a sequence that goes from Auto, Cool, Dry, Fan, and Heat*, as the following:

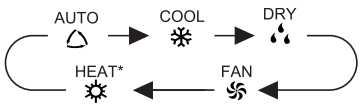

(*Notice: Only for models with heating function.)

After energization, Auto mode is defaulted. In Auto mode, the set temperature will not be displayed on the LCD, and the unit will automatically select the suitable operation mode in accordance with the room temperature to make indoor room comfortable. (As for cooling only unit, it won't have any action when it receives the signal of heating operation.)

FAN button

This button is used for setting Fan Speed in the sequence that goes from Auto, , , to to then back to Auto.

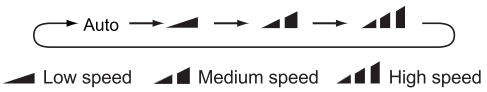

● X-FAN function Hold fan speed button for 2s in COOL or DRY mode, the icon " " is displayed and the indoor fan will continue operation for a few minutes in order to dry the indoor unit even though you have turned off the unit. After energization, X-FAN

OFF is defaulted. X-FAN is not available in AUTO, FAN or HEAT mode.

This function indicates that moisture on evaporator of indoor unit will be blowed after the unit is stopped to avoid mould.

● Having set X-FAN function on: After turning

off the unit by pressing ON/OFF button indoor fan will continue running for a few minutes. at low speed. In this period, Hold fan speed button for 2s to stop indoor fan directly.

● Having set X-FAN function off: After turning off the unit by pressing ON/OFF button, the complete unit will be off directly.

SWING button

Press this button to set up & down swing angle, which circularly changes as below:

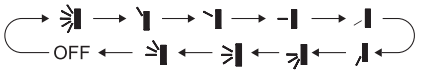

This remote controller is universal. If any command , or is sent out, the unit will carry out the command as

indicates the guide louver swings as:

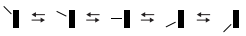

I FEEL button

Press this button to turn on I FEEL function. The unit automatically adjust temperature according to the sensed temperature. Press this button again to cancel I FEEL function.

● When I FEEL function is turned on, the remote controller should be put within the area where indoor unit can receive the signal sent by the remote controller.

button

Press this button to achieve the on and off of health and scavenging functions in operation status. Press this button for the first time to start scavenging function; LCD displays "". Press the button for the second time to start health and scavenging functions simultaneously; LCD displays "" and "". Press this button for the third time to quit health and scavenging functions simultaneously. Press the button for the fourth time to start health function; LCD display "". Press this button again to repeat the operation above.

Notice:

● This function is only available for some models.

SLEEP button

Press this button to go into the Sleep operation mode. Press it again to cancel this function. This function is available in Cool, Heat (Only for models with heating function) mode to maintain the most comfortable temperature for you.

TEMP button

Press this button can see indoor set temperature, indoor ambient temperature or outdoor ambient temperature on indoor unit's display. Temperature is set circularly by remote controller as below:

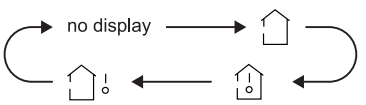

● When selecting " " or no display with remote controller, temperature indicator on indoor unit displays set temperature.

● When selecting " " with remote controller, temperature indicator on indoor unit displays indoor ambient temperature.

● When selecting " " with remote controller, temperature indicator on indoor unit displays outdoor ambient temperature.

Notice:

● Outdoor temperature display is not available for some models. At that time, indoor unit receives " " signal, while it displays indoor set temperature.

● Only for the models whose indoor unit has dual-8 display.

TIMER-ON button

Press this button to initiate the auto-ON timer. To cancel the auto-timer program, simply press this button again.

After press of this button, disappears and "ON" blinks. 00:00 is displayed for ON time setting. Within 5 seconds, press + or - button to adjust the time value. Every press of either button changes the time setting by 1 minute. Holding down either button rapidly changes the time setting by 1 minute and then 10 minutes. Within 5 seconds after setting, press TIMER ON button to confirm.

CLOCK button

Press CLOCK button, blinking . Within 5 seconds, pressing + or - button adjusts the present time. Holding down either button above 2 seconds increases or decreases the time by 1 minute every 0.5 second and then by 10 minutes every 0.5 second. During blinking after setting, press CLOCK button again to confirm the setting, and then will be constantly displayed.

TIMER-OFF button

Press this button to initiate the auto-off timer. To cancel the auto-timer program, simply press the button again. TIMER OFF setting is the same as TIMER ON.

TURBO button

Press this button to activate / deactivate the Turbo function which enables the unit to reach the preset temperature in the shortest time. In COOL mode, the unit will blow strong cooling air at super high fan speed. In HEAT mode, the unit will blow strong heating air at super high fan speed.

LIGHT button

Press LIGHT button to turn on the display's light and press this button again to turn off the display's light. If the light is turned on, is displayed. If the light is turned off, disappears.

WiFi button

Press " WiFi " button to turn on WiFi function, "WiFi " icon will be displayed on the remote controller;

Hold " WiFi " button for 5s to turn off WiFi function and " WiFi " icon will disappear.

Under off status, press "MODE" and " WiFi " buttons simultaneously for 1s, WiFi module will restore factory settings.

NOTE:

● This function only applicable for some models.

Function introduction for combination buttons

Combination of "+" and "-" buttons: About Child lock

Press " + " and " - " buttons simultaneously to lock or unlock the keypad. If the remote controller is locked, 🔒 is displayed. In this case, pressing any button, 🔒 blinks three times.

Combination of "MODE" and "-" buttons: About switch between Fahrenheit and centigrade

At unit OFF, press "MODE" and "-" buttons simultaneously to switch between °C and °F.

Combination of "TEMP" and "CLOCK" buttons: About Energy-saving Function

Press "TEMP" and "CLOCK" simultaneously in COOL mode to start energy-saving function. Nixie tube on the remote controller displays "SE". Repeat the operation to quit the function.

Combination of "TEMP" and "CLOCK" buttons: About 8°C Heating Function

Press " TEMP " and " CLOCK " simultaneously in HEAT mode to start 8°C Heating Function. Nixie tube on the remote controller displays " ⑧ " and a selected temperature of " 8°C " . (46°F if Fahrenheit is adopted). Repeat the operation to quit the function.

About Health function (COLD PLASMA)

Turn on the unit, start up the fan (Breezing and X-FAN are excluded) and press Health button on remote controller to start health function (If there is not Health button on remote controller, the unit defaults health function ON.)

If “H1” is displayed on the remote controller while it’s not operated by the professional person/after-sales person, it belongs to the misoperation.

Please operate it as below to cancel it.Under the OFF status of remote controller, hold the “MODE” button and “X-FAN” buttons simultaneously for 5s to cancel “H1” display. Sub-Assy

Note:

● If remote controller displays “H1”, it belongs to the normal function reminder. If the unit is defrosting under heating mode, it operates according to H1 defrosting mode. “H1” won’t be displayed on the panel of indoor unit;

● Once you set H1 mode, if you turn off unit by remote controller, H1 will display 3 times on the remote controller and then disappear;

● Also, when you set H1 mode, when you change to heating mode, H1 will display 3 times on the remote controller and then disappear.

Replacement of batteries in remote controller

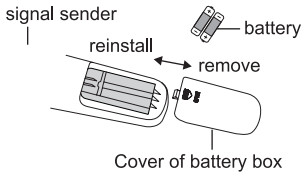

1. Press the back side of remote controller marked with" OPEN ", as shown in the fig, and then push out the cover of battery box along the arrow direction.
2. Replace two 7# (AAA 1.5V) dry batteries, and make sure the position of "+" polar and "-" polar are correct.
3. Reinstall the cover of battery box.

NOTICE:

● During operation, point the remote control signal sender at the receiving window on indoor unit.

● The distance between signal sender and receiving window should be no more than 8m, and there should be no obstacles between them.

● Signal may be interfered easily in the room where there is fluorescent lamp or wireless telephone; remote controller should be close to indoor unit during operation.

● Replace new batteries of the same model when replacement is required.

● When you don't use remote controller for a long time, please take out the batteries.

● If the display on remote controller is fuzzy or there's no display, please replace batteries.

6.2 Brief Description of Models and Functions

● Indoor Unit

1.Basic function of system

(1)Cooling mode

(1) Under this mode, fan and swing operates at setting status. Temperature setting range is 16~30°C.

(2) During malfunction of outdoor unit or the unit is stopped because of protection, indoor unit keeps original operation status.

(2)Drying mode

(1) Under this mode, fan operates at low speed and swing operates at setting status. Temperature setting range is 16~30°C.

(2) During malfunction of outdoor unit or the unit is stopped because of protection, indoor unit keeps original operation status.

(3) Protection status is same as that under cooling mode.

(4) Sleep function is not available for drying mode.

(3)Heating mode

(1) Under this mode, Temperature setting range is 16~30°C.

(2) Working condition and process for heating mode:

When turn on the unit under heating mode, indoor unit enters into cold air prevention status. When the unit is stopped or at OFF status, and indoor unit has been started up just now, the unit enters into residual heat-blowing status.

(4)Working method for AUTO mode:

1.Working condition and process for AUTO mode:

a.Under AUTO mode, standard heating Tpreset=20°C and standard cooling Tpreset=25°C. The unit will switch mode automatically according to ambient temperature.

2.Protection function

a. During cooling operation, protection function is same as that under cooling mode.

b. During heating operation, protection function is same as that under heating mode.

3. Display: Set temperature is the set value under each condition. Ambient temperature is (Tamb.-Tcompensation) for heat pump unit and Tamb. for cooling only unit.

4. If theres I feel function, Tcompensation is 0. Others are same as above.

(5)Fan mode

Under this mode, indoor fan operates at set fan speed. Compressor, outdoor fan, 4-way valve and electric heating tube stop operation. Indoor fan can select to operate at high, medium, low or auto fan speed. Temperature setting range is 16~30°C.

2. Other control

(1) Buzzer

Upon energization or availably operating the unit or remote controller, the buzzer will give out a beep.

(2) Auto button

If press this auto button when turning off the unit, the complete unit will operate at auto mode. Indoor fan operates at auto fan speed and swing function is turned on. Press this auto button at ON status to turn off the unit.

(3) Auto fan

Heating mode: During auto heating mode or normal heating ode, auto fan speed will adjust the fan speed automatically according to ambient temperature and set temperature.

(4) Sleep

After setting sleep function for a period of time, system will adjust set temperature automatically.

(5) Timer function:

General timer and clock timer functions are compatible by equipping remote controller with different functions.

(6) Memory function

memorize compensation temperature, off-peak energization value. Memory content: mode, up&down swing, light, set temperature, set fan speed, general timer (clock timer cant be memorized).

After power recovery, the unit will be turned on automatically according to memory content.

(7) Health function

During operation of indoor fan, set health function by remote controller. Turn off the unit will also turn off health function.

Turn on the unit by pressing auto button, and the health is defaulted ON.

(8)I feel control mode

After controller received I feel control signal and ambient temperature sent by remote controller, controller will work according to the ambient temperature sent by remote controller.

(9)Entry condition for compulsory defrosting function

When turn on the unit under heating ode and set temperature is 16°C (or 16.5^{O}C by remote controller), press “+, -, +, -, +, -” button successively within 5s and then indoor unit will enter into compulsory defrosting setting status:

(1) If theres only indoor units controller, it enters into indoor normal defrosting mode.

(2) If theres indoor units controller and outdoor units controller, indoor unit will send compulsory defrosting mode signal to outdoor unit and then outdoor unit will operate under normal defrosting mode. After indoor unit received the signal that outdoor unit has entered into defrosting status, indoor unit will cancel to send compulsory mode to outdoor unit. If outdoor unit hasnt received feedback signal from outdoor unit after 3min, indoor unit will also cancel to send compulsory defrosting signal.

(10)Refrigerant recovery function:

Enter into Freon recovery mode actively: Within 5min after energization, turn on the unit at 16°C under cooling mode, and press light button for 3 times within 3s to enter into Freon recovery mode. Fo is displayed and Freon recovery mode will be sent to outdoor unit.

(11)Ambient temperature display control mode

1. When user set the remote controller to display set temperature (corresponding remote control code: 01), current set temperature

will be displayed.

2. Only when remote control signal is switched to indoor ambient temperature display status (corresponding remote control code: 10) from other display status (corresponding remote control code: 00, 01,11),controller will display indoor ambient temperature for 3s and then turn back to display set temperature.

Under this mode, indoor fan operates at set fan speed. Compressor, outdoor fan, 4-way valve and electric heating tube stop operation. Indoor fan can select to operate at high, medium, low or auto fan speed. Temperature setting range is 16~30°C.

(12)Off-peak energization function:

Adjust compressors minimum stop time. The original minimum stop time is 180s and then we change to:

The time interval between two start-ups of compressor cant be less than 180+Ts(0≤T≤15). T is the variable of controller. Thats to say the minimum stop time of compressor is 180s~195s. Read-in T into memory chip when refurbish the memory chip each time. After power recovery, compressor can only be started up after 180+T s at least.

(13) SE control mode

The unit operates at SE status.

(14) X-fan mode

When X-fan function is turned on, after turn off the unit, indoor fan will still operate at low speed for 2min and then the complete unit will be turned off. When x-fan function is turned off, after turn off the unit, the complete unit will be turned off directly.

(15) 8°C heating function

Under heating mode, you can set 8°C heating function by remote controller. The system will operate at 8°C set temperature.

(16)Turbo function

Turbo function can be set under cooling and heating modes. Press Fan Speed button to cancel turbo setting. Turbo function is not available under auto, drying and fan modes.

● Outdoor Unit

1. Cooling mode:

Working condition and process of cooling mode:

① When Tindoor ambient temperature≥Tpreset, unit enters into cooling mode. Indoor fan, outdoor fan and compressor start operation. Indoor fan operates according to set fan speed.

② When Tindoor ambient temperature≤Tpreset-2℃, compressor stops operation and outdoor fan will stop 30s later. Indoor fan operates according to set fan speed.

③ When Tpreset-2℃＜Tindoor ambient temperature＜Tpreset, unit operates according to the previous status.

Under cooling mode, 4-way valve is not energized. Temperature setting range is 16~30 ℃. If compressor stops because of malfunction in cooling mode, indoor fan and swing motor will work according to the original status.

2. Drying mode

(1) Working condition and process of drying mode

① When Tindoor ambient temperature ＞ Tpreset, unit will be in drying mode. Outdoor fan and compressor start operation while indoor fan will operate at low fan speed.

② When Tpreset-2℃ ≤Tindoor ambient temperature≤Tpreset, unit operates according to the previous status.

③ When Tindoor ambient temperature ＜ Tpreset-2 ℃, compressor stops operation and outdoor fan will stop 30s later.

(2) Under drying mode, 4-way valve is not energized. Temperature setting range is 16~30℃.

(3) Protection function: same as in cooling mode.

3. Fan mode

(1) Under this mode, indoor fan can select different fan speed (except Turbo) or auto fan speed. Compressor, outdoor fan and 4-way valve all stop operation.

(2) In fan mode, temperature setting range is 16~30℃.

4. Heating mode

Working condition and process of heating mode:

① When Tpreset-(Tindoor ambient temperature-Tcompensation)≥1℃, unit enters into heating mode. Compressor, outdoor fan and 4-way valve start operation.

② When -2 ℃ ＜ Tpreset-(Tindoor ambient temperature-Tcompensation)＜1℃, unit operates according to the previous status.

③ When Tpreset-(Tindoor ambient temperature-Tcompensation)≤-2 ℃, compressor stops operation and outdoor fan will stop 30s later. Indoor fan will be in residual-heat blowing status.

④ When unit is turned off under heating mode or changed to other modes from heating mode, 4-way valve will be power-off 2min after compressor stops working (compressor is in operation status under heating mode).

⑤ When Toutdoor ambient temperature ＞ 30 ℃, compressor stops operation immediately. Outdoor fan will stop 30s later.

⑥ Under the condition that compressor is turned on, when unit is changed to heating mode from cooling or drying mode, 4-way valve will be energized in 2~3mins delay.

Note: Tcompensation is determined by IDU and ODU. If IDU controls the compensation temperature, then Tcompensation is determined according to the value sent by IDU to ODU; If IDU does not control the compensation temperature, then Tcompensation will default to 3℃ by the ODU.

5. Freon recovery mode

After the Freon recovery signal from IDU is received, cooling at rated frequency will be forcibly turned on to recover Freon.

Indoor unit will display Fo. If any signal from remote controller is received, unit will exit from Freon recovery mode and indoor unit stops displaying Fo.

6. Compulsory defrosting

If unit is turned on under heating mode and set temperature is 16 ℃ (by remote controller), press "+, -, +, -, +, -" within 5s, unit will enter into compulsory defrosting mode and send the signal to ODU. When the compulsory defrosting signal from ODU is received, IDU will exit from the compulsory defrosting mode and stop sending the signal to ODU.

After ODU receives the compulsory defrosting code, it will start compulsory defrosting. Defrosting frequency and opening angle will be the same as in normal defrosting mode. When compulsory defrosting is finished, the complete unit resumes original status.

7. Auto mode

Auto mode is determined by controller of IDU. See IDU logic for details.

8. 8°C heating

Set temperature is 8°C. Display board of IDU displays 8°C. Under this mode, "Cold air prevention" function is shielded.

If compressor is operating under this mode, fan speed will adjust according to auto fan speed; if compressor stops operation under this mode, indoor fan will be in residual-heat blowing status.

When power on, communication light will be blinking in a normal way (after receiving a group of correct signals, blinking stops for 0.2s~0.3s). If theres no communication, communication light will be always on. If other ODU has malfunction, communication light will be on for 1s and off for 1s in a circular way.

6.3 Ewpe Smart App Operation Manual

Control Flow Chart

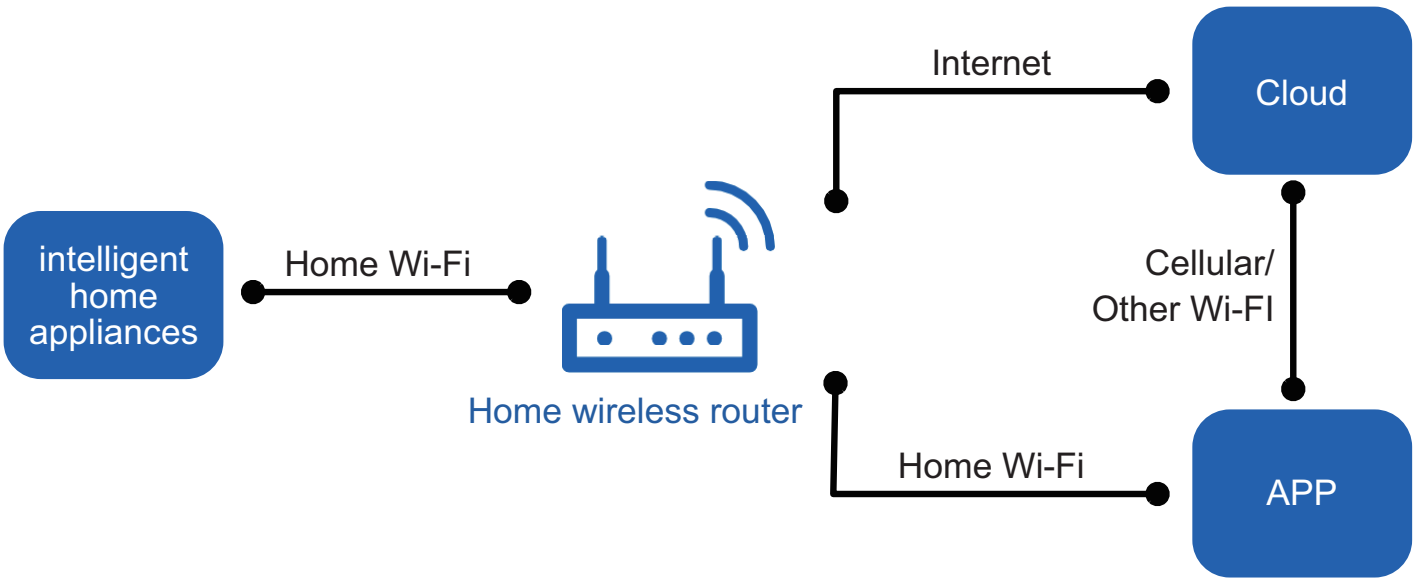

Operating Systems

Requirement for User's smart phone:

iOS system
Support iOS7.0 and above version

Android system
Support Android 4.4 and above version

Download and installation

App Download Linkage

Scan the QR code or search "Ewpe Smart" in the application market to download and install it. When "Ewpe Smart" App is installed, register the account and add the device to achieve long-distance control and LAN control of smart home appliances.
For more information, please refer to "Help" in App.

7. Notes for Installation and Maintenance

Safety Precautions: Important!

Please read the safety precautions carefully before installation and maintenance.

The following contents are very important for installation and maintenance.

Please follow the instructions below.

●The installation or maintenance must accord with the instructions.

●Comply with all national electrical codes and local electrical codes.

●Pay attention to the warnings and cautions in this manual.

●All installation and maintenance shall be performed by distributor or qualified person.

●All electric work must be performed by a licensed technician according to local regulations and the instructions given in this manual.

●Be caution during installation and maintenance. Prohibit incorrect operation to prevent electric shock, casualty and other accidents.

⚠ WARNINGS

Electrical Safety Precautions:

1. Cut off the power supply of air conditioner before checking and maintenance.

2. The air condition must apply specialized circuit and prohibit share the same circuit with other appliances.

3. The air conditioner should be installed in suitable location and ensure the power plug is touchable.

4. Make sure each wiring terminal is connected firmly during installation and maintenance.

5. Have the unit adequately grounded. The grounding wire cant be used for other purposes.

6. Must apply protective accessories such as protective boards, cable-cross loop and wire clip.

7. The live wire, neutral wire and grounding wire of power supply must be corresponding to the live wire, neutral wire and grounding wire of the air conditioner.

8. The power cord and power connection wires cant be pressed by hard objects.

9. If power cord or connection wire is broken, it must be replaced by a qualified person.

10. If the power cord or connection wire is not long enough, please get the specialized power cord or connection wire from the manufacture or distributor. Prohibit prolong the wire by yourself.

11. For the air conditioner without plug, an air switch must be installed in the circuit. The air switch should be all-pole parting and the contact parting distance should be more than 3mm.

12. Make sure all wires and pipes are connected properly and the valves are opened before energizing.

13. Check if there is electric leakage on the unit body. If yes, please eliminate the electric leakage.

14. Replace the fuse with a new one of the same specification if it is burnt down; dont replace it with a cooper wire or conducting wire.

15. If the unit is to be installed in a humid place, the circuit breaker must be installed.

Installation Safety Precautions:

1. Select the installation location according to the requirement of this manual.(See the requirements in installation part)

2. Handle unit transportation with care; the unit should not be carried by only one person if it is more than 20kg.

3. When installing the indoor unit and outdoor unit, a sufficient fixing bolt must be installed; make sure the installation support is firm.

4. Ware safety belt if the height of working is above 2m.

5. Use equipped components or appointed components during installation.

6. Make sure no foreign objects are left in the unit after finishing installation.

Refrigerant Safety Precautions:

1. When refrigerant leaks or requires discharge during installation, maintenance, or disassembly, it should be handled by certified professionals or otherwise in compliance with local laws and regulations.

2.Avoid contact between refrigerant and fire as it generates poisonous gas; Prohibit prolong the connection pipe by welding.

3. Apply specified refrigerant only. Never have it mixed with any other refrigerant. Never have air remain in the refrigerant line as it may lead to rupture or other hazards.

4. Make sure no refrigerant gas is leaking out when installation is completed.

5. If there is refrigerant leakage, please take sufficient measure to minimize the density of refrigerant.

6. Never touch the refrigerant piping or compressor without wearing glove to avoid scald or frostbite.

Improper installation may lead to fire hazard, explosion, electric shock or injury.

Safety Precautions for Installing and Relocating the Unit:

To ensure safety, please be mindful of the following precautions.

⚠ WARNINGS

1. When installing or relocating the unit, be sure to keep the refrigerant circuit free from air or substances other than the specified refrigerant.

Any presence of air or other foreign substance in the refrigerant circuit will cause system pressure rise or compressor rupture, resulting in injury.

2.When installing or moving this unit, do not charge the refrigerant which is not comply with that on the nameplate or unqualified refrigerant.

Otherwise, it may cause abnormal operation, wrong action, mechanical malfunction or even series safety accident.

3.When refrigerant needs to be recovered during relocating or repairing the unit, be sure that the unit is running in cooling mode.Then, fully close the valve at high pressure side (liquid valve).About 30-40 seconds later, fully close the valve at low pressure side (gas valve), immediately stop the unit and disconnect power. Please note that the time for refrigerant recovery should not exceed 1 minute.

If refrigerant recovery takes too much time, air may be sucked in and cause pressure rise or compressor rupture, resulting in injury.

4.During refrigerant recovery, make sure that liquid valve and gas valve are fully closed and power is disconnected before detaching the connection pipe.

If compressor starts running when stop valve is open and connection pipe is not yet connected, air will be sucked in and cause pressure rise or compressor rupture, resulting in injury.

5.When installing the unit, make sure that connection pipe is securely connected before the compressor starts running.

If compressor starts running when stop valve is open and connection pipe is not yet connected, air will be sucked in and cause pressure rise or compressor rupture, resulting in injury.

6.Prohibit installing the unit at the place where there may be leaked corrosive gas or flammable gas.

If there leaked gas around the unit, it may cause explosion and other accidents.

7.Do not use extension cords for electrical connections. If the electric wire is not long enough, please contact a local service center authorized and ask for a proper electric wire.

Poor connections may lead to electric shock or fire.

8.Use the specified types of wires for electrical connections between the indoor and outdoor units. Firmly clamp the wires so that their terminals receive no external stresses.

Electric wires with insufficient capacity, wrong wire connections and insecure wire terminals may cause electric shock or fire.

Safety Precautions for Refrigerant

●To realize the function of the air conditioner unit, a special refrigerant circulates in the system. The used refrigerant is the fluoride R32,which is specially cleaned. The refrigerant is flammable and inodorous. Furthermore, it can leads to explosion under certain conditions. But the flammability of the refrigerant is very low. It can be ignited only by fire.
●Compared to common refrigerants, R32 is a nonpolluting refrigerant with no harm to the ozonosphere. The influence upon the greenhouse effect is also lower. R32 has got very good thermodynamic features which lead to a really high energy efficiency. The units therefore need a less filling.

WARNING:

●Do not use means to accelerate the defrosting process or to clean, other than those recommended by the manufacture.
Should repair be necessary,contact your nearest authorized Service Centre. Any repairs carried out by unqualified personnel may be dangerous. The appliance shall be stored in a room without continuously operating ignition sources. (for example:open flames , an operating gas appliance or an operating electric heater.)
●Do not pierce or burn.
●Appliance shall be installed, operated and stored in a room with a floor area larger than Xm^2.(Please refer to table "a" in section of " Safety operation of flammable refrigerant " for space X.)
●Appliance filled with flammable gas R32. For repairs, strictly follow manufacturers instructions only.Be aware that refrigrants not contain odour.
●Read specialists manual.



Safety Operation of Flammable Refrigerant

Qualification requirement for installation and maintenance man

●All the work men who are engaging in the refrigeration system should bear the valid certification awarded by the authoritative organization and the qualification for dealing with the refrigeration system recognized by this industry. If it needs
other technician to maintain and repair the appliance, they should be supervised by the person who bears the qualification for using the flammable refrigerant.
●It can only be repaired by the method suggested by the equipments manufacturer.

Installation notes

●The air conditioner is not allowed to use in a room that has running fire (such as fire source,working coal gas ware, operating heater).
●It is not allowed to drill hole or burn the connection pipe.
●The air conditioner must be installed in a room that is larger than the minimum room area.
The minimum room area is shown on the nameplate or following table a.
●Leak test is a must after installation.

table a - Minimum room area (m^2)

Charge amount (kg)	floor location	window mounted	wall mounted	ceiling mounted
≤1.2	/	/	/	/
1.3	14.5	5.2	1.6	1.1
1.4	16.8	6.1	1.9	1.3
1.5	19.3	7	2.1	1.4
1.6	22	7.9	2.4	1.6
1.7	24.8	8.9	2.8	1.8
1.8	27.8	10	3.1	2.1
1.9	31	11.2	3.4	2.3
2	34.3	12.4	3.8	2.6
2.1	37.8	13.6	4.2	2.8
2.2	41.5	15	4.6	3.1
2.3	45.4	16.3	5	3.4
2.4	49.4	17.8	5.5	3.7
2.5	53.6	19.3	6	4

Maintenance notes

●Check whether the maintenance area or the room area meet the requirement of the nameplate.
— Its only allowed to be operated in the rooms that meet the requirement of the nameplate.
●Check whether the maintenance area is well-ventilated.
— The continuous ventilation status should be kept during the operation process.
●Check whether there is fire source or potential fire source in the maintenance area.
— The naked flame is prohibited in the maintenance area; and the “no smoking” warning board should be hanged.
●Check whether the appliance mark is in good condition.
— Replace the vague or damaged warning mark.

Welding

●If you should cut or weld the refrigerant system pipes in the process of maintaining, please follow the steps as below:
a. Shut down the unit and cut power supply
b. Eliminate the refrigerant
c. Vacuuming
d. Clean it with N_2 gas
e. Cutting or welding

f. Carry back to the service spot for welding

●Make sure that there isnt any naked flame near the outlet of the vacuum pump and its well-ventilated.

●The refrigerant should be recycled into the specialized storage tank.

Filling the refrigerant

●Use the refrigerant filling appliances specialized for R32. Make sure that different kinds of refrigerant wont contaminate with each other.

●The refrigerant tank should be kept upright at the time of filling refrigerant.

●Stick the label on the system after filling is finished (or havent finished).

●Dont overfilling.

●After filling is finished, please do the leakage detection before test running; another time of leak detection should be done when its removed.

Safety instructions for transportation and storage

●Please use the flammable gas detector to check before unload and open the container.

●No fire source and smoking.

●According to the local rules and laws.

Main Tools for Installation and Maintenance



Level meter



Measuring tape



Screw driver



Impact drill



Drill head



Electric drill



Electroprobe



Universal meter



Torque wrench



Open-end wrench



Inner hexagon spanner



Electronic leakage detector



Vacuum pump



Pressure meter



Pipe pliers



Pipe pliers



Pipe cutter



Pipe expander



Pipe bender



Soldering appliance



Refrigerant container



Electronic scale

8. Installation

8.1 Installation Dimension Diagram

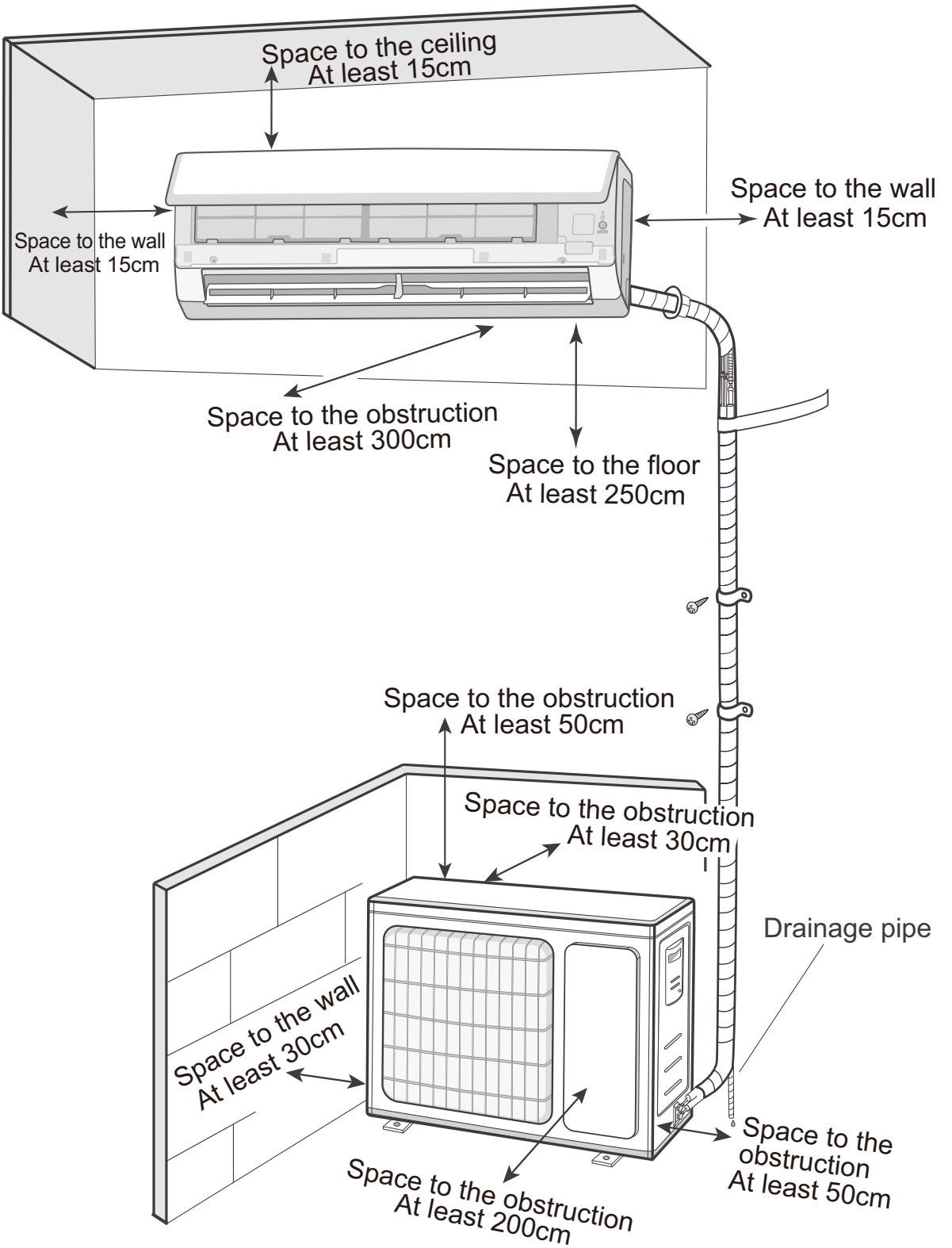

Installation Procedures

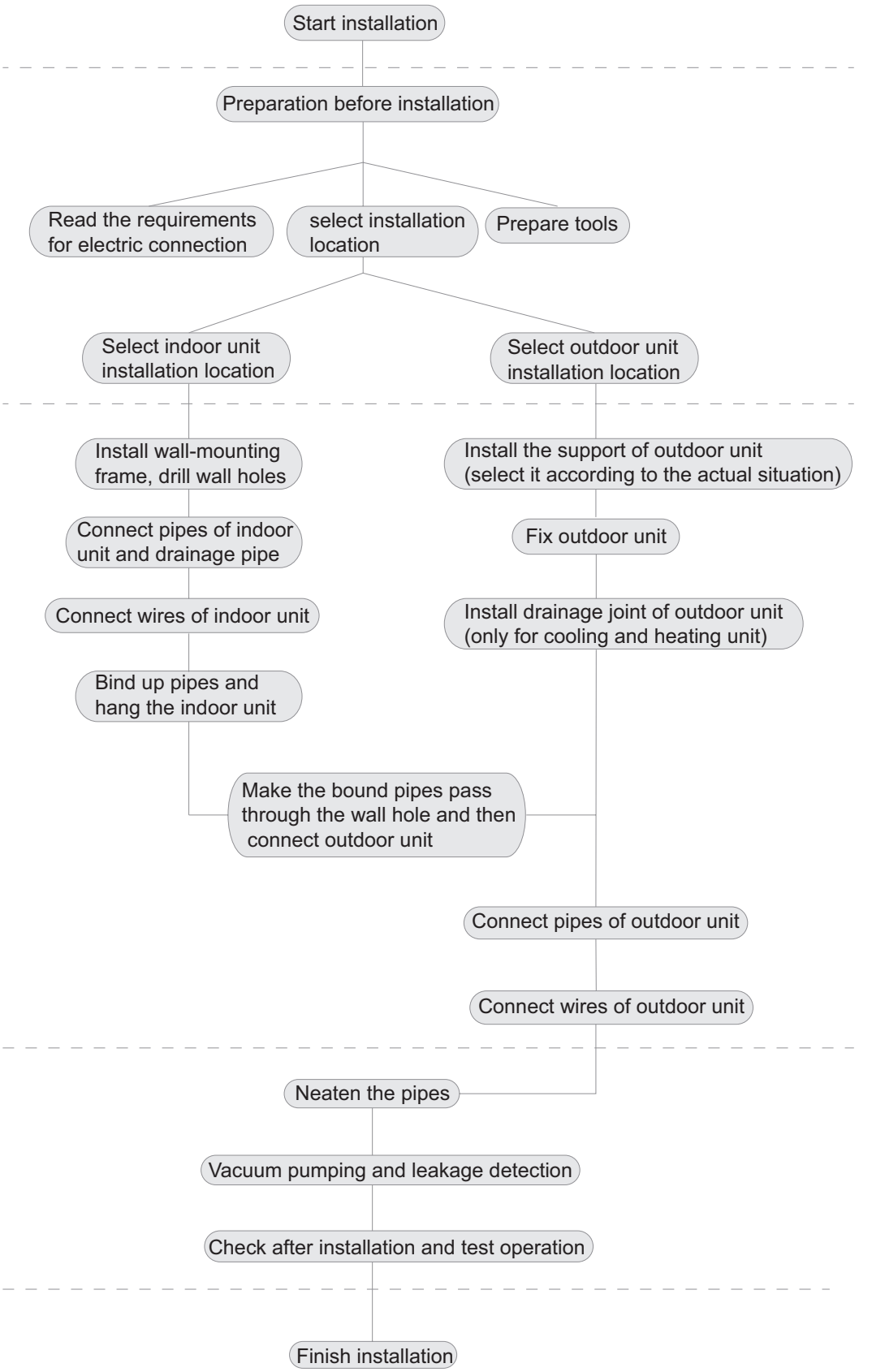

Note: this flow is only for reference; please find the more detailed installation steps in this se

8.2 Installation Parts-checking

No.	Name
1	Indoor unit
2	Outdoor unit
3	Connection pipe
4	Drainage pipe
5	Wall-mounting frame
6	Connecting cable(power cord)
7	Wall pipe
8	Sealing gum
9	Wrapping tape
10	Support of outdoor unit
11	Fixing screw
12	Drainage plug(cooling and heating unit)
13	Owners manual, remote controller

⚠ **Note:**
1.Please contact the local agent for installation.
2.Dont use unqualified power cord.

8.3 Selection of Installation Location

1. Basic Requirement:

Installing the unit in the following places may cause malfunction. If it is unavoidable, please consult the local dealer:

(1) The place with strong heat sources, vapors, flammable or explosive gas, or volatile objects spread in the air.

(2) The place with high-frequency devices (such as welding machine, medical equipment).

(3) The place near coast area.

(4) The place with oil or fumes in the air.

(5) The place with sulfureted gas.

(6) Other places with special circumstances.

(7) The appliance shall nost be installed in the laundry.

(8) It's not allowed to be installed on the unstable or motive base structure(such as truck) or in the corrosive environment (such as chemical factory).

2. Indoor Unit:

(1) There should be no obstruction near air inlet and air outlet.

(2) Select a location where the condensation water can be dispersed easily andwont affect other people.

(3) Select a location which is convenient to connect the outdoor unit and near the power socket.

(4) Select a location which is out of reach for children.

(5) The location should be able to withstand the weight of indoor unit and wont increase noise and vibration.

(6) The appliance must be installed 2.5m above floor.

(7) Dont install the indoor unit right above the electric appliance.

(8) Please try your best to keep way from fluorescent lamp.

3. Outdoor Unit:

(1) Select a location where the noise and outflow air emitted by the outdoor unit will not affect neighborhood.

(2) The location should be well ventilated and dry, in which the outdoor unit wont be exposed directly to sunlight or strong wind.

(3) The location should be able to withstand the weight of outdoor unit.

(4) Make sure that the installation follows the requirement of installation dimension diagram.

(5) Select a location which is out of reach for children and far away from animals or plants.If it is unavoidable, please add fence for safety purpose.

8.4 Electric Connection Requirement

1. Safety Precaution

(1) Must follow the electric safety regulations when installing the unit.

(2) According to the local safety regulations, use qualified power supply circuit and air switch.

(3) Make sure the power supply matches with the requirement of air conditioner. Unstable power supply or incorrect wiring may result in electric shock,fire hazard or malfunction. Please install proper power supply cables before using the air conditioner.

(4) Properly connect the live wire, neutral wire and grounding wire of power socket.

(5) Be sure to cut off the power supply before proceeding any work related to electricity and safety.

(6) Do not put through the power before finishing installation.

(7) If the supply cord is damaged, it must be replaced by the manufacturer, its service agent or similarly qualified persons in order to avoid a hazard .

(8) The temperature of refrigerant circuit will be high, please keep the interconnection cable away from the copper tube.

(9) The appliance shall be installed in accordance with national wiring regulations.

2. Grounding Requirement:

(1) The air conditioner is the first class electric appliance.It must be properly grounding with specialized grounding device by a professional.

Please make sure it is always grounded effectively,otherwise it may cause electric shock.

(2) The yellow-green wire in air conditioner is grounding wire, which cant be used for other purposes.

(3) The grounding resistance should comply with national electric safety regulations.

(4) The appliance must be positioned so that the plug is accessible.

(5) An all-pole disconnection switch having a contact separation of at least 3mm in all poles should be connected in fixed wiring.

(6) Including an air switch with suitable capacity, please note the following table. Air switch should be included magnet buckle and heating buckle function, it can protect the circuit-short and overload. (Caution: please do not use the fuse only for protect the circuit)

Model	Air switch capacity	Power cord
SIH+SOH-24BIK	16A	3G2.5

8.5 Installation of Indoor Unit

1. Choosing Installation location

Recommend the installation location to the client and then confirm it with the client.

2. Install Wall-mounting Frame

(1) Hang the wall-mounting frame on the wall; adjust it in horizontal position with the level meter and then point out the screw fixing holes on the wall.

(2) Drill the screw fixing holes on the wall with impact drill (the specification of drill head should be the same as the plastic expansion particle) and then fill the plastic expansion particles in the holes.

(3) Fix the wall-mounting frame on the wall with tapping screws and then check if the frame is firmly installed by pulling the frame. If the plastic expansion particle is loose, please drill another fixing hole nearby.

3. Install Wall-mounting Frame

(1) Choose the position of piping hole according to the direction of outlet pipe. The position of piping hole should be a little lower than the wall-mounted frame,shown as below.(As show in Fig.1)

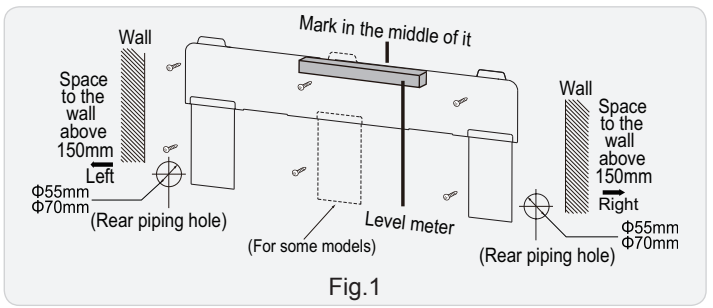

Fig.1

(2) Open a piping hole with the diameter of Φ55mm or Φ70mm on the selected outlet pipe position. In order to drain smoothly, slant the piping hole on the wall slightly downward to the outdoor side with the gradient of 5-10°.(As show in Fig.2)

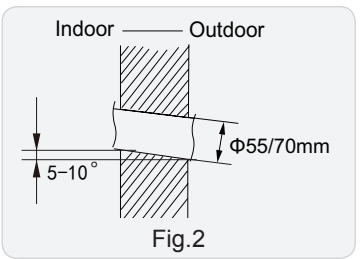

Fig.2

⚠ Note:

Pay attention to dust prevention and take relevant safety measures when opening the hole.

4. Outlet Pipe

(1) The pipe can be led out in the direction of right, rear right, left or rear left.(As show in Fig.3)

(2) When selecting leading out the pipe from left or right, please cut off the corresponding hole on the bottom case.(As show in Fig.4)

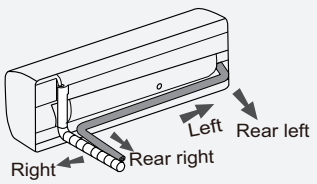

Fig.3

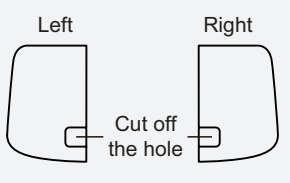

Fig.4

5. Connect the Pipe of Indoor Unit

(1) Aim the pipe joint at the corresponding bellmouth.(As show in Fig.5)

(2) Pretightening the union nut with hand.

(3) Adjust the torque force by referring to the following sheet. Place the open-end wrench on the pipe joint and place the torque wrench on the union nut. Tighten the union nut with torque wrench.(As show in Fig.6)

(4) Wrap the indoor pipe and joint of connection pipe with insulating pipe, and then wrap it with tape.(As show in Fig.7)

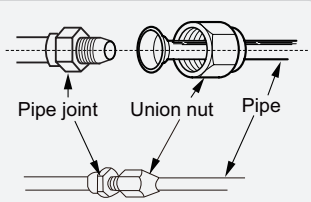

Fig.5

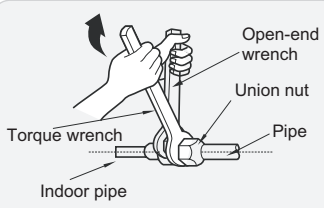

Fig.6

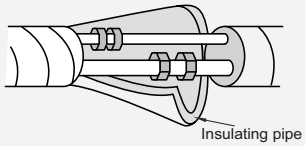

Fig.7

Refer to the following table for wrench moment of force：

Piping size	Tightening torque(N·m)
1/4”	15~20
3/8”	30~40
1/2”	45~55
5/8”	60~65
3/4”	70~75

6. Install Drain Hose

(1) Connect the drain hose to the outlet pipe of indoor unit.(As show in Fig.8)

(2) Bind the joint with tape.(As show in Fig.9)

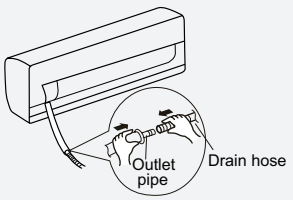

Fig.8

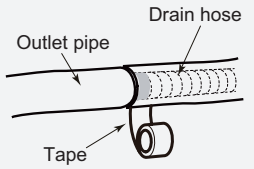

Fig.9

⚠ Note:

(1) Add insulating pipe in the indoor drain hose in order to prevent condensation.

(2) The plastic expansion particles are not provided.

(As show in Fig.10)

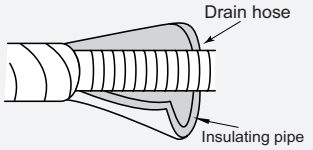

Fig.10

7. Connect Wire of Indoor Unit

(1) Open the panel, remove the screw on the wiring cover and then take down the cover.(As show in Fig.11)

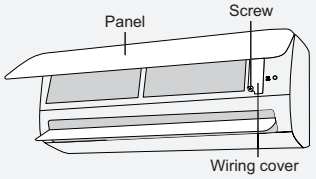

Fig.11

(2) Make the power connection wire go through the cable-cross hole at the back of indoor unit and then pull it out from the front side.(As show in Fig.12)

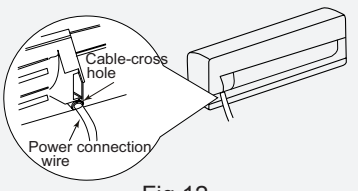

Fig.12

(3) Remove the wire clip; connect the power connection wiresignal control wire (only for cooling and heating unit) to the wiring terminal according to the color; tighten the screw and then fix the power connection wire with wire clip.(As show in Fig.13)

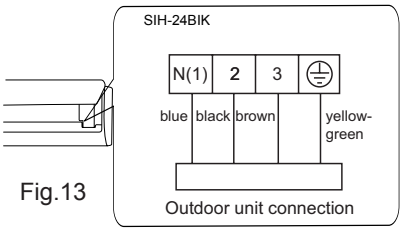

Fig.13

Note: The wiring connect is for reference only, please refer to the actual one.

(4) Put wiring cover back and then tighten the screw.

(5) Close the panel.

⚠ Note:

(1) All wires of indoor unit and outdoor unit should be connected by a professional.

(2) If the length of power connection wire is insufficient, please contact the supplier for a new one. Avoid extending the wire by yourself.

(3) For the air conditioner with plug, the plug should be reachable after finishing installation.

(4) For the air conditioner without plug, an air switch must be installed in the line. The air switch should be all-pole parting and the contact parting distance should be more than 3mm.

8. Bind up Pipe

(1) Bind up the connection pipe, power cord and drain hose with the band.(As show in Fig.14)

(2) Reserve a certain length of drain hose and power cord for installation when binding them. When binding to a certain degree, separate the indoor power and then separate the drain hose.(As show in Fig.15)

(3) Bind them evenly.

(4) The liquid pipe and gas pipe should be bound separately at the end.

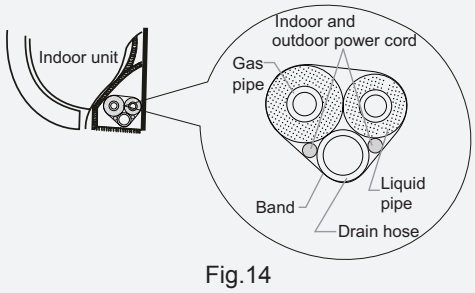

Fig.14

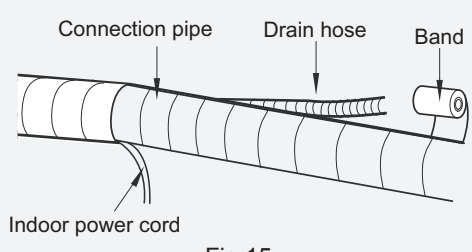

Fig.15

⚠ Note:

(1) The power cord and control wire cant be crossed or winding.

(2) The drain hose should be bound at the bottom.

9. Hang the Indoor Unit

(1) Put the bound pipes in the wall pipe and then make them pass through the wall hole.

(2) Hang the indoor unit on the wall-mounting frame.

(3) Stuff the gap between pipes and wall hole with sealing gum.

(4) Fix the wall pipe.(As show in Fig.16)

(5) Check if the indoor unit is installed firmly and closed to the wall.(As show in Fig.17)

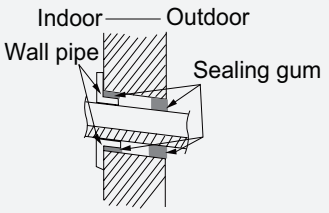

Fig.16

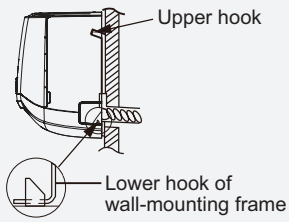

Fig.17

⚠ Note:

Do not bend the drain hose too excessively in order to prevent blocking.

8.6 Installation of Outdoor unit

1. Fix the Support of Outdoor Unit(Select it according to the actual installation situation)

(1) Select installation location according to the house structure.

(2) Fix the support of outdoor unit on the selected location with expansion screws.

⚠ Note:

(1) Take sufficient protective measures when installing the outdoor unit.

(2) Make sure the support can withstand at least four times the unit weight.

(3) The outdoor unit should be installed at least 3cm above the floor in order to install drain joint.(As show in Fig.18)

(4) For the unit with cooling capacity of 2300W~5000W, 6 expansion screws are needed; for the unit with cooling capacity of 6000W~8000W, 8 expansion screws are needed; for the unit with cooling capacity of 10000W~16000W, 10 expansion screws are needed.

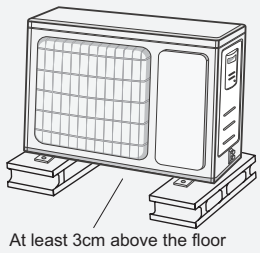

Fig.18

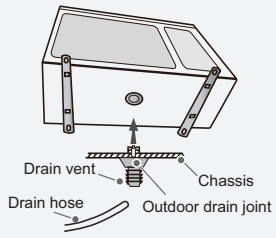

Fig.19

2. Install Drain Joint(Only for cooling and heating unit)

(1) Connect the outdoor drain joint into the hole on the chassis.

(2) Connect the drain hose into the drain vent.

(As show in Fig.19)

3. Fix Outdoor Unit

(1) Place the outdoor unit on the support.

(2) Fix the foot holes of outdoor unit with bolts.

(As show in Fig.20)

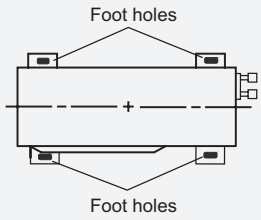

Fig.20

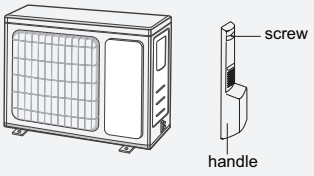

Fig.21

4. Connect Indoor and Outdoor Pipes

(1) Remove the screw on the right handle of outdoor unit and then remove the handle.(As show in Fig.21)

⚠ Note:

(1) When there're multiple cables passing through it, the cross-hole of handle should be knocked off and eliminate the sharp burrs for avoid damaging the cables.
(2) Only applicable for some models.

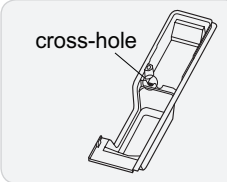

(2) Remove the screw cap of valve and aim the pipe joint at the bellmouth of pipe.(As show in Fig.22)

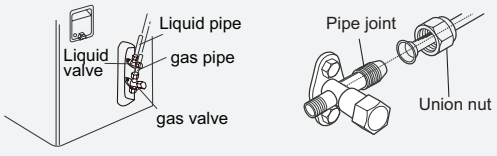

Fig.22

(3) Pretightening the union nut with hand.

(4) Tighten the union nut with torque wrench .
Refer to the following table for wrench moment of force:

Piping size	Tightening torque(N·m)
1/4”	15~20
3/8”	30~40
1/2”	45~55
5/8”	60~65
3/4”	70~75

5. Connect Outdoor Electric Wire

(1) Remove the wire clip; connect the power connection wire and signal control wire (only for cooling and heating unit) to the wiring terminal according to the color; fix them with screws.(As show in Fig.23)

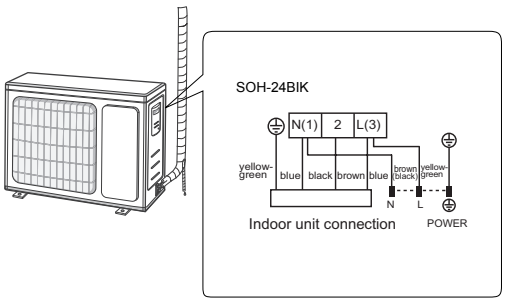

Fig.23

Note: the wiring connect is for reference only,please refer to the actual one.

(2) Fix the power connection wire and signal control wire with wire clip (only for cooling and heating unit).

⚠ Note:

(1) After tightening the screw, pull the power cord slightly to check if it is firm.

(2) Never cut the power connection wire to prolong or shorten the distance.

6. Neaten the Pipes

(1) The pipes should be placed along the wall, bent reasonably and hidden possibly. Min. semidiameter of bending the pipe is 10cm.

(2) If the outdoor unit is higher than the wall hole, you must set a U-shaped curve in the pipe before pipe goes into the room, in order to prevent rain from getting into the room.(As show in Fig.24)

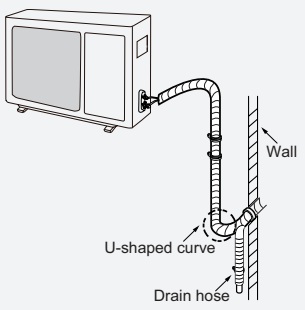

Fig.24

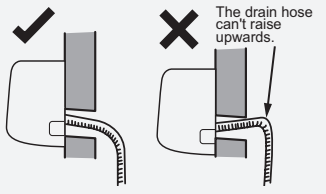

Fig.25

⚠ Note:

(1) The through-wall height of drain hose shouldnt be higher than the outlet pipe hole of indoor unit.(As show in Fig.25)

(2) Slant the drain hose slightly downwards. The drain hose cant be curved, raised and fluctuant, etc.(As show in Fig.26)

(3) The water outlet cant be placed in water in order to drain smoothly.(As show in Fig.27)

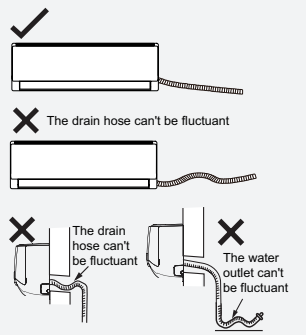

Fig.26

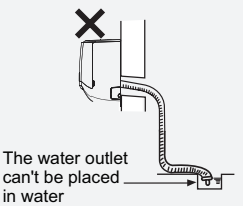

Fig.27

8.7 Vacuum Pumping and Leak Detection

1. Use Vacuum Pump

(1) Remove the valve caps on the liquid valve and gas valve and the nut of refrigerant charging vent.

(2) Connect the charging hose of piezometer to the refrigerant charging vent of gas valve and then connect the other charging hose to the vacuum pump.

(3) Open the piezometer completely and operate for 10-15min to check if the pressure of piezometer remains in -0.1MPa.

(4) Close the vacuum pump and maintain this status for 1-2min to check if the pressure of piezometer remains in -0.1MPa. If the pressure decreases, there may be leakage.

(5) Remove the piezometer, open the valve core of liquid valve and gas valve completely with inner hexagon spanner.

(6) Tighten the screw caps of valves and refrigerant charging vent.(As show in Fig.28)

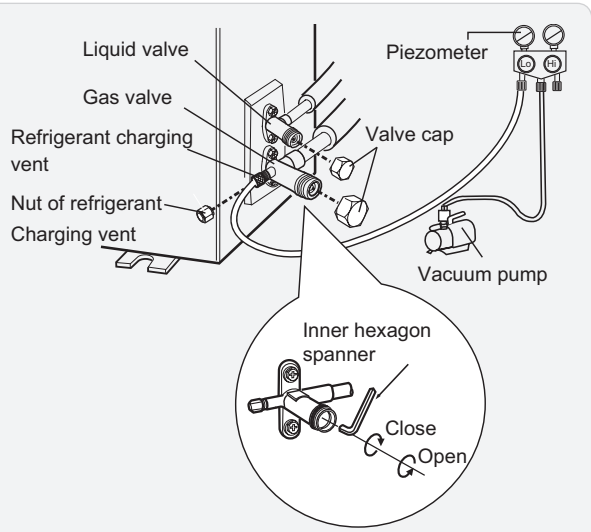

Fig.28

2. Leakage Detection

(1) With leakage detector:

Check if there is leakage with leakage detector.

(2) With soap water:

If leakage detector is not available, please use soap water for leakage detection. Apply soap water at the suspected position and keep the soap water for more than 3min. If there are air bubbles coming out of this position, there's a leakage.

8.8 Check after Installation and Test operation

1. Check after Installation

Check according to the following requirement after finishing installation.

NO.	Items to be checked	Possible malfunction
1	Has the unit been installed firmly?	The unit may drop, shake or emit noise.
2	Have you done the refrigerant leakage test?	It may cause insufficient cooling (heating) capacity.
3	Is heat insulation of pipeline sufficient?	It may cause condensation and water dripping.
4	Is water drained well?	It may cause condensation and water dripping.
5	Is the voltage of power supply according to the voltage marked on the nameplate?	It may cause malfunction or damage the parts.
6	Is electric wiring and pipeline installed correctly?	It may cause malfunction or damage the parts.
7	Is the unit grounded securely?	It may cause electric leakage.
8	Does the power cord follow the specification?	It may cause malfunction or damage the parts.
9	Is there any obstruction in air inlet and air outlet?	It may cause insufficient cooling (heating) capacity.
10	The dust and sundries caused during installation are removed?	It may cause malfunction or damaging the parts.
11	The gas valve and liquid valve of connection pipe are open completely?	It may cause insufficient cooling (heating) capacity.
12	Is the inlet and outlet of piping hole been covered?	It may cause insufficient cooling(heating) capacity or waster eletricity.

2. Test Operation

(1) Preparation of test operation

● The client approves the air conditioner installation.

● Specify the important notes for air conditioner to the client.

(2) Method of test operation

● Put through the power, press ON/OFF button on the remote controller to start operation.

● Press MODE button to select AUTO, COOL, DRY, FAN and HEAT to check whether the operation is normal or not.

● If the ambient temperature is lower than 16 ℃ , the air conditioner cant start cooling.

9. Maintenance

9.1 Error Code List

Malfunction Name	Display Method of Indoor Unit (Error Code)	A/C Status	Possible Causes(For specific maintenance method, please refer to the following procedure of troubleshooting)
High pressure protection of system	E1	During cooling and drying operation, except indoor fan operates, all loads stop operation. During heating operation, the complete unit stops.	Possible reasons: 1. Refrigerant was superabundant; 2. Poor heat exchange (including filth blockage of heat exchanger and bad radiating environment); Ambient temperature is too high.
Antifreezing protection for evaporator	E2		Not the error code. It's the status code for the operation.
System block or refrigerant leakage	E3	The Dual-8 Code Display will show E3 until the low pressure switch stop operation.	1.Low-pressure protection 2.Low-pressure protection of system 3.Low-pressure protection of compressor
High discharge temperature protection of compressor	E4	During cooling and drying operation, compressor and outdoor fan stop while indoor fan operates. During heating operation, all loads stop.	Please refer to the malfunction analysis (discharge protection, overload).
Overcurrent protection	E5	During cooling and drying operation, compressor and outdoor fan stop while indoor fan operates. During heating operation, all loads stop.	1. Supply voltage is unstable; 2. Supply voltage is too low and load is too high; 3. Evaporator is dirty.
Communi-cation Malfunction	E6	During cooling operation, compressor stops while indoor fan motor operates. During heating operation, the complete unit stops.	Refer to the corresponding malfunction analysis.
High temperature resistant protection	E8	During cooling operation: compressor will stop while indoor fan will operate. During heating operation, the complete unit stops.	Refer to the malfunction analysis (overload, high temperature resistant).
EEPROM malfunction	EE	During cooling and drying operation, compressor will stop while indoor fan will operate; During heating operation, the complete unit will stop	Replace outdoor control panel AP1
Limit/decrease frequency due to high temperature of module	EU	All loads operate normally, while operation frequency for compressor is decreased	Discharging after the complete unit is de-energized for 20mins, check whether the thermal grease on IPM Module of outdoor control panel AP1 is sufficient and whether the radiator is inserted tightly. If its no use, please replace control panel AP1.
Malfunction protection of jumper cap	C5	Wireless remote receiver and button are effective, but can not dispose the related command	1. No jumper cap insert on mainboard. 2. Incorrect insert of jumper cap. 3. Jumper cap damaged. 4. Abnormal detecting circuit of mainboard.
Gathering refrigerant	F0	When the outdoor unit receive signal of Gathering refrigerant ,the system will be forced to run under cooling mode for gathering refrigerant	Nominal cooling mode
Indoor ambient temperature sensor is open/short circuited	F1	During cooling and drying operation, indoor unit operates while other loads will stop; during heating operation, the complete unit will stop operation.	1. Loosening or bad contact of indoor ambient temp. sensor and mainboard terminal. 2. Components in mainboard fell down leads short circuit. 3. Indoor ambient temp. sensor damaged.(check with sensor resistance value chart) 4. Mainboard damaged.
Indoor evaporator temperature sensor is open/short circuited	F2	AC stops operation once reaches the setting temperature. Cooling, drying: internal fan motor stops operation while other loads stop operation; heating: AC stop operation	1. Loosening or bad contact of Indoor evaporator temp. sensor and mainboard terminal. 2. Components on the mainboard fall down leads short circuit. 3. Indoor evaporator temp. sensor damaged.(check temp. sensor value chart for testing) 4. Mainboard damaged.

Outdoor ambient temperature sensor is open/short circuited	F3	During cooling and drying operating, compressor stops while indoor fan operates; During heating operation, the complete unit will stop operation	Outdoor temperature sensor hasnt been connected well or is damaged. Please check it by referring to the resistance table for temperature sensor)
Outdoor condenser temperature sensor is open/short circuited	F4	During cooling and drying operation, compressor stops while indoor fan will operate; During heating operation, the complete unit will stop operation.	Outdoor temperature sensor hasnt been connected well or is damaged. Please check it by referring to the resistance table for temperature sensor)
Outdoor discharge temperature sensor is open/short circuited	F5	During cooling and drying operation, compressor will sop after operating for about 3 mins, while indoor fan will operate; During heating operation, the complete unit will stop after operating for about 3 mins.	1.Outdoor temperature sensor hasnt been connected well or is damaged. Please check it by referring to the resistance table for temperature sensor) 2.The head of temperature sensor hasnt been inserted into the copper tube
Limit/decrease frequency due to overload	F6	All loads operate normally, while operation frequency for compressor is decreased	Refer to the malfunction analysis (overload, high temperature resistant)
Decrease frequency due to overcurrent	F8	All loads operate normally, while operation frequency for compressor is decreased	The input supply voltage is too low; System pressure is too high and overload
Decrease frequency due to high air discharge	F9	All loads operate normally, while operation frequency for compressor is decreased	Overload or temperature is too high; Refrigerant is insufficient; Malfunction of electric expansion valve (EKV)
Limit/decrease frequency due to antifreezing	FH	All loads operate normally, while operation frequency for compressor is decreased	Poor air-return in indoor unit or fan speed is too low
Voltage for DC bus-bar is too high	PH	During cooling and drying operation, compressor will stop while indoor fan will operate; During heating operation, the complete unit will stop operation.	1. Measure the voltage of position L and N on wiring board (XT), if the voltage is higher than 265VAC, turn on the unit after the supply voltage is increased to the normal range. 2.If the AC input is normal, measure the voltage of electrolytic capacitor C on control panel (AP1), if its normal, theres malfunction for the circuit, please replace the control panel (AP1)
Voltage of DC bus-bar is too low	PL	During cooling and drying operation, compressor will stop while indoor fan will operate; During heating operation, the complete unit will stop	1. Measure the voltage of position L and N on wiring board (XT), if the voltage is higher than 150VAC, turn on the unit after the supply voltage is increased to the normal range. 2.If the AC input is normal, measure the voltage of electrolytic capacitor C on control panel (AP1), if its normal, theres malfunction for the circuit, please replace the control panel (AP1)
Compressor Min frequence in test state	P0		Showing during min. cooling or min. heating test
Compressor rated frequence in test state	P1		Showing during nominal cooling or nominal heating test
Compressor maximum frequence in test state	P2		Showing during max. cooling or max. heating test
Compressor intermediate frequence in test state	P3		Showing during middle cooling or middle heating test
Overcurrent protection of phase current for compressor	P5	During cooling and drying operation, compressor will stop while indoor fan will operate; During heating operation, the complete unit will stop operation.	Refer to the malfunction analysis (IPM protection, loss of synchronism protection and overcurrent protection of phase current for compressor.
Charging malfunction of capacitor	PU	During cooling and drying operation, compressor will stop while indoor fan will operate; During heating operation, the complete unit will stop	Refer to the part three—charging malfunction analysis of capacitor

Malfunction of module temperature sensor circuit	P7	During cooling and drying operation, compressor will stop while indoor fan will operate; During heating operation, the complete unit will stop	Replace outdoor control panel AP1
Module high temperature protection	P8	During cooling operation, compressor will stop while indoor fan will operate; During heating operation, the complete unit will stop	After the complete unit is de-energized for 20mins, check whether the thermal grease on IPM Module of outdoor control panel AP1 is sufficient and whether the radiator is inserted tightly. If its no use, please replace control panel AP1.
Overload protection for compressor	H3	During cooling and drying operation, compressor will stop while indoor fan will operate; During heating operation, the complete unit will stop operation.	1. Wiring terminal OVC-COMP is loosened. In normal state, the resistance for this terminal should be less than 1ohm. 2.Refer to the malfunction analysis (discharge protection, overload)
IPM protection	H5	During cooling and drying operation, compressor will stop while indoor fan will operate; During heating operation, the complete unit will stop operation.	Refer to the malfunction analysis (IPM protection, loss of synchronism protection and overcurrent protection of phase current for compressor.
Malfunction of zero-cross detection circuit	U8	The complete unit stops	1.Power supply is abnormal; 2.Detection circuit of indoor control mainboard is abnormal.
Internal motor (fan motor) do not operate	H6	Internal fan motor, external fan motor, compressor and electric heater stop operation,guide louver stops at present location.	1. Bad contact of DC motor feedback terminal. 2. Bad contact of DC motor control end. 3. Fan motor is stalling. 4. Motor malfunction. 5. Malfunction of mainboard revdetecting circuit.
Desynchro-nizing of compressor	H7	During cooling and drying operation, compressor will stop while indoor fan will operate; During heating operation, the complete unit will stop operation.	Refer to the malfunction analysis (IPM protection, loss of synchronism protection and overcurrent protection of phase current for compressor.
PFC protection	HC	During cooling and drying operation, compressor will stop while indoor fan will operate; During heating operation, the complete unit will stop operation.	Refer to the malfunction analysis
Outdoor DC fan motor malfunction	L3	Outdoor DC fan motor malfunction lead to compressor stop operation,	DC fan motor malfunction or system blocked or the connector loosed
power protection	L9	compressor stop operation and Outdoor fan motor will stop 30s latter , 3 minutes latter fan motor and compressor will restart	To protect the electronical components when detect high power
Indoor unit and outdoor unit doesnt match	LP	compressor and Outdoor fan motor cant work	Indoor unit and outdoor unit doesnt match
Failure start-up	LC	During cooling and drying operation, compressor will stop while indoor fan will operate; During heating operation, the complete unit will stop operation.	Refer to the malfunction analysis
Defrosting	Heating indicator off for 0.5s and then blinks for 10s	Defrosting will occur in heating mode. Compressor will operate while indoor fan will stop operation.	Not the error code. It's the status code for the operation
The four-way valve is abnormal	U7	If this malfunction occurs during heating operation, the complete unit will stop operation.	1.Supply voltage is lower than AC175V; 2.Wiring terminal 4V is loosened or broken; 3.4V is damaged, please replace 4V.

Malfunction of phase current detection circuit for compressor	U1	During cooling and drying operation, compressor will stop while indoor fan will operate; During heating operation, the complete unit will stop	Replace outdoor control panel AP1
Malfunction of voltage dropping for DC busbar	U3	During cooling and drying operation, compressor will stop while indoor fan will operate; During heating operation, the complete unit will stop	Supply voltage is unstable
Malfunction of complete units current detection	U5	During cooling and drying operation, the compressor will stop while indoor fan will operate; During heating operating, the complete unit will stop operation.	Theres circuit malfunction on outdoor units control panel AP1, please replace the outdoor units control panel AP1.
Cold air prevention protection	E9		Not the error code. It's the status code for the operation.
Refrigerant recovery mode	Fo		Refrigerant recovery. The Serviceman operates it for maintenance.
Malfunction of detecting plate(WIFI)	JF	Loads operate normally, while the unit can't be normally controlled by APP.	1.Main board of indoor unit is damaged; 2.Detection board is damaged; 3.The connection between indoor unit and detection board is not good;
Undefined outdoor unit error	oE	Cool: compressor and outdoor fan stops operation, while indoor fan operates; Heat: compressor, outdoor fan and indoor fan stop operation.	1. Outdoor ambient temperature exceeds the operation range of unit (eg: less than- 20°C or more than 60°C for cooling; more than 30°C for heating); 2. Failure startup of compressor? 3. Are wires of compressor not connected tightly? 4. Is compressor damaged? 5. Is main board damaged?

Analysis or processing of some of the malfunction display:

1. Compressor discharge protection

Possible causes: shortage of refrigerant; blockage of air filter; poor ventilation or air flow short pass for condenser; the system has noncondensing gas (such as air, water etc.); blockage of capillary assy (including filter); leakage inside four-way valve causes incorrect operation; malfunction of compressor; malfunction of protection relay; malfunction of discharge sensor; outdoor temperature too high.

Processing method: refer to the malfunction analysis in the above section.

2. Low voltage overcurrent protection

Possible cause: Sudden drop of supply voltage.

3. Communication malfunction

Processing method: Check if communication signal cable is connected reliably.

4. Sensor open or short circuit

Processing method: Check whether sensor is normal, connected with the corre sponding position on the controller and if damage of lead wire is found.

5. Compressor over load protection

Possible causes: insufficient or too much refrigrant; blockage of capillary and increase of suction temp.; improper running of compressor, burning in or stuck of bearing, damage of discharge valve; malfunction of protector.

Processing method: adjust refrigerant amount; replace the capillary; replace the compressor; use universal meter to check if the contactor of compress or is fine when it is not overheated, if not replace the protector.

6. System malfunction

i.e.overload protection.When tube temperature(Check the temperature of outdoor heat exchanger when cooling and check the temperatur e of indoor heat exchanger when heating) is too high, protection will be activated.

Possible causes: Outdoor temperature is too high when cooling; insufficient outdoor air circulation; refrigerant flow malfunction.

please refer to the malfunction analysis in the previous section for handling method .

7. IPM module protection

Processing method:Once the module malfunction happens,if it persists for a long time and can not be selfcanceled, cut off the power and turn off the unit,and then re-energize the unit again after about 10 min.After repeating the procedure for sever times, if the malfunction still exists,replace the module.

If malfunction occurs,corresponding code will display and the unit will resume normal until protection or malfunction disappears.

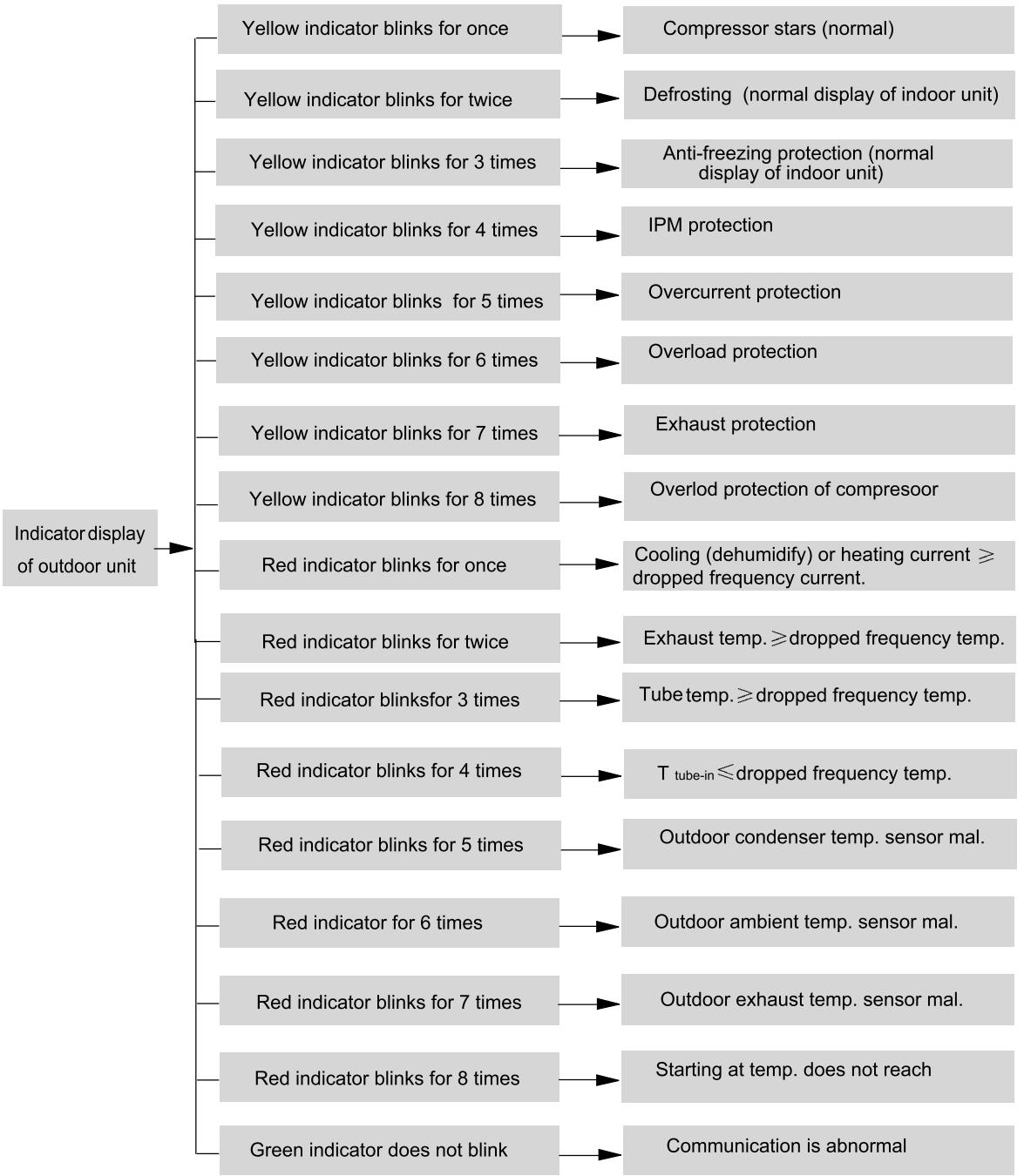

9.2 Procedure of Troubleshooting

●Indoor unit:

1. Malfunction of Temperature Sensor F1, F2

Main detection points:

- Is the wiring terminal between the temperature sensor and the controller loosened or poorly contacted?
- Is there short circuit due to trip-over of the parts?
- Is the temperature sensor broken?
- Is mainboard broken?

Malfunction diagnosis process:

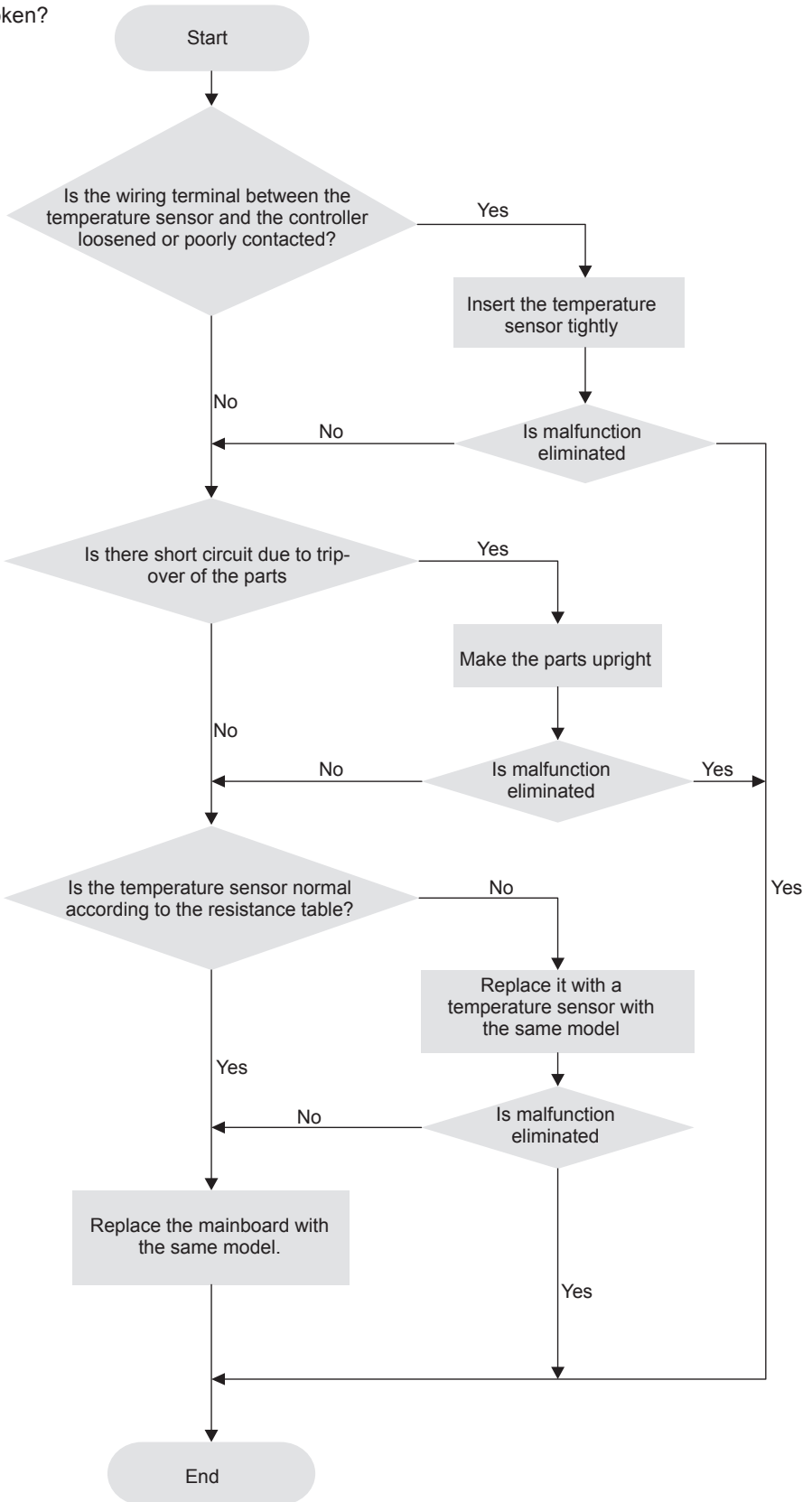

2. Malfunction of Blocked Protection of IDU Fan Motor H6

Main detection points:

- SmoothlyIs the control terminal of PG motor connected tightly?
- SmoothlyIs the feedback interface of PG motor connected tightly?
- The fan motor can't operate?
- The motor is broken?
- Detectioncircuit of the mainboard is defined abnormal?

Malfunction diagnosis process:

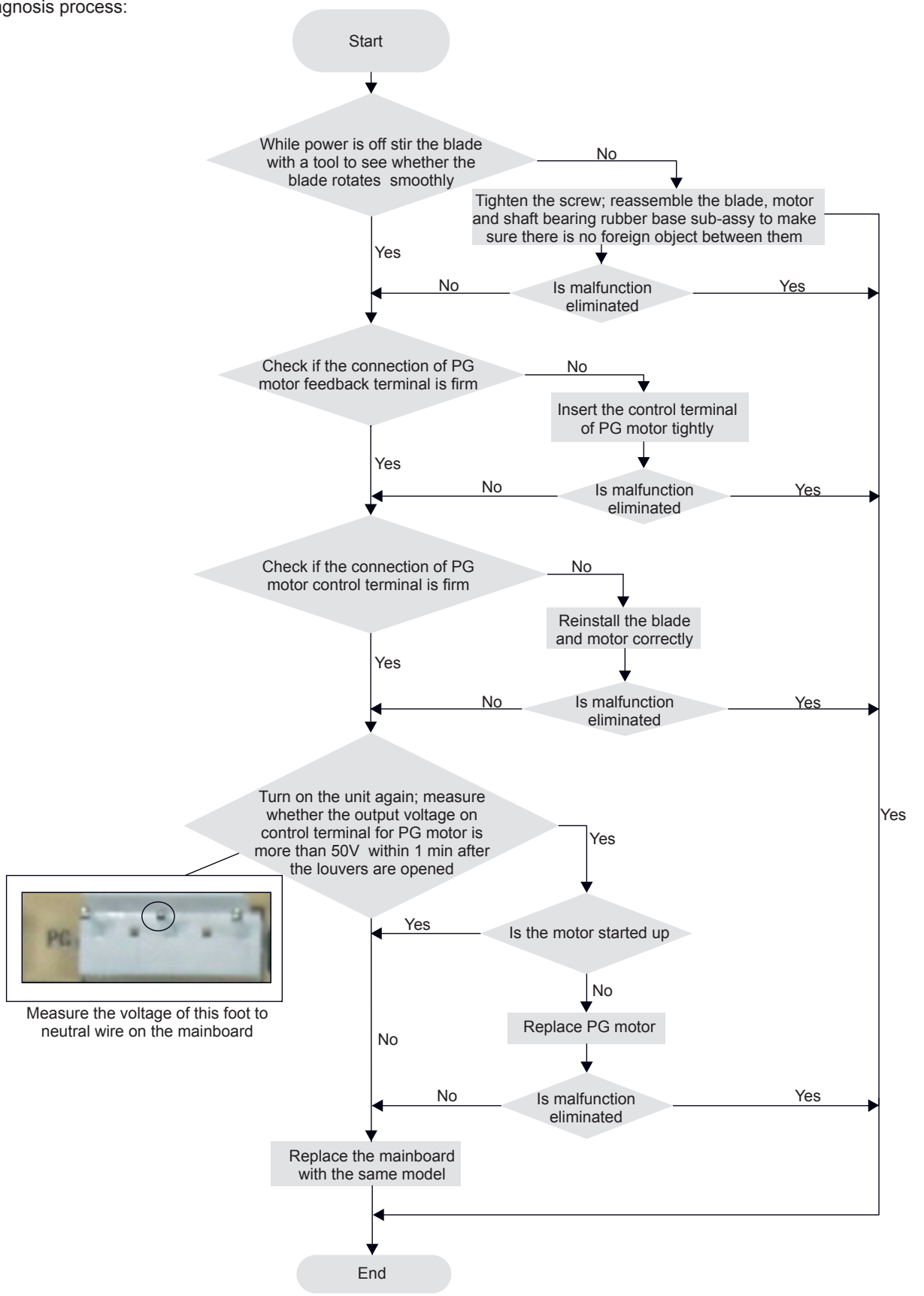

3. Malfunction of Protection of Jumper Cap C5

Main detection points:

- Is there jumper cap on the mainboard?
- Is the jumper cap inserted correctly and tightly?
- The jumper is broken?
- The motor is broken?
- Detection circuit of the mainboard is defined abnormal?

Malfunction diagnosis process:

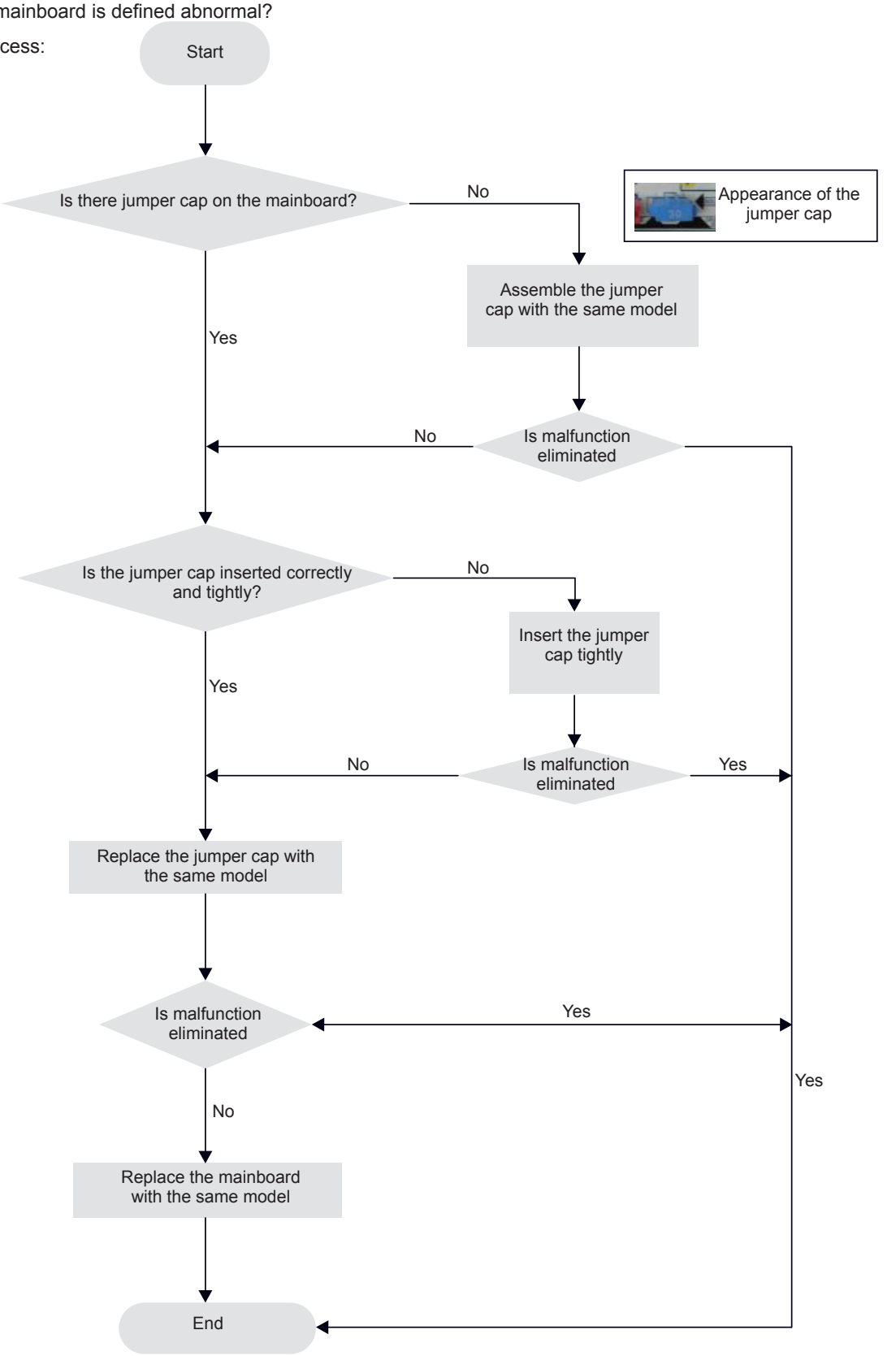

4. Malfunction of Zero-crossing Inspection Circuit Malfunction of the IDU Fan Motor U8

Main detection points:

- Instant energization afte de-energization while the capacitordischarges slowly?
- The zero-cross detectioncircuit of the mainboard is defined abnormal?

Malfunction diagnosis process:

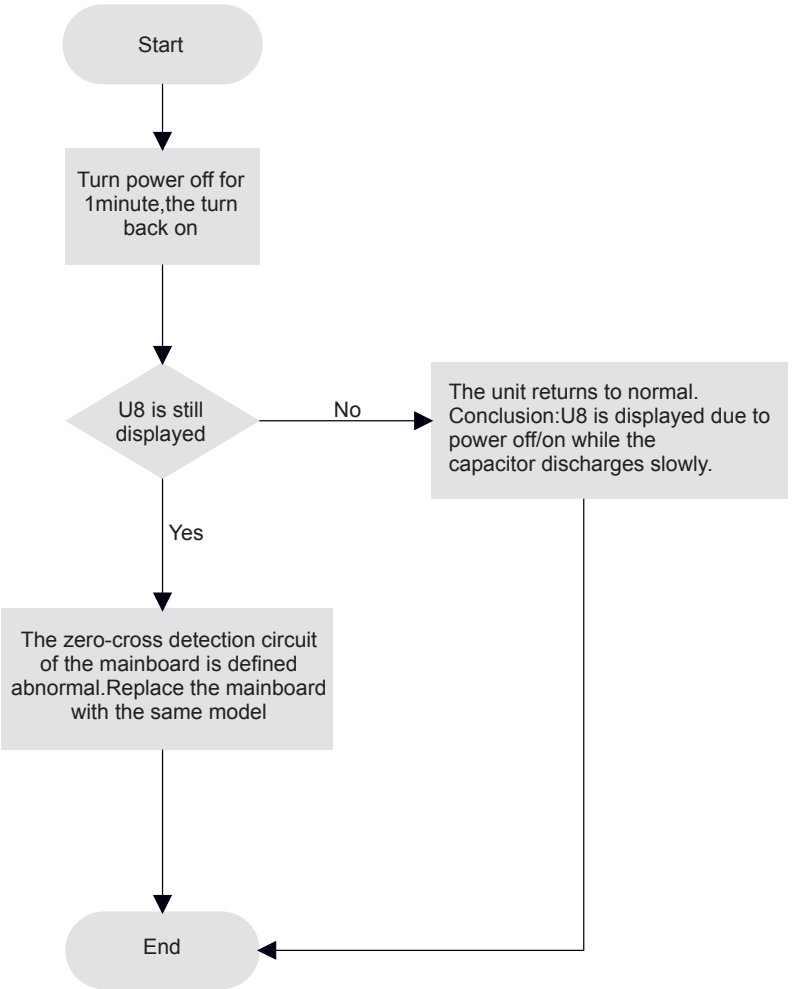

5. High Temperature and Overload Protection (AP1 below means control board of outdoor unit) E8

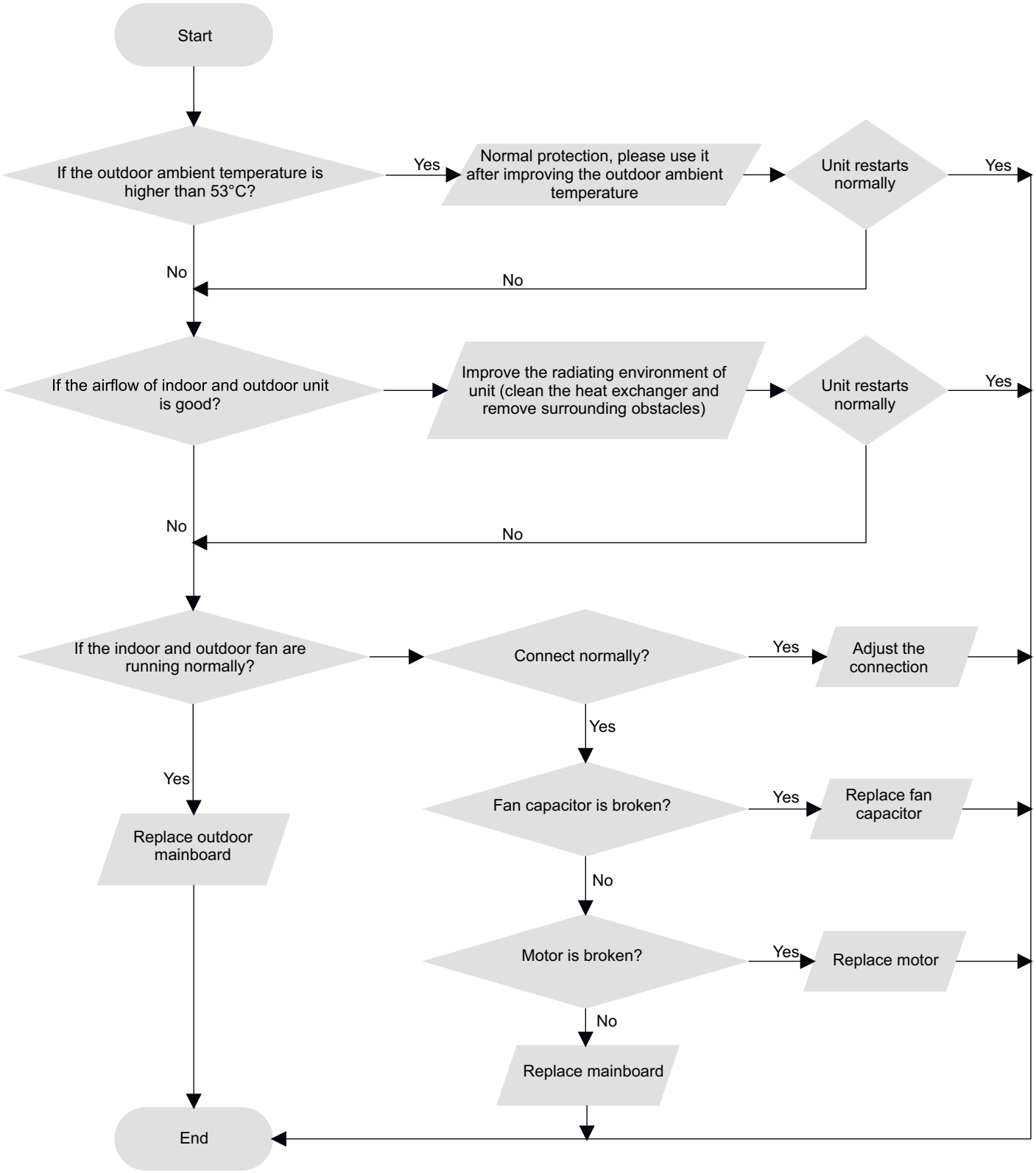

6. Malfunction of detecting plate(WIFI) JF

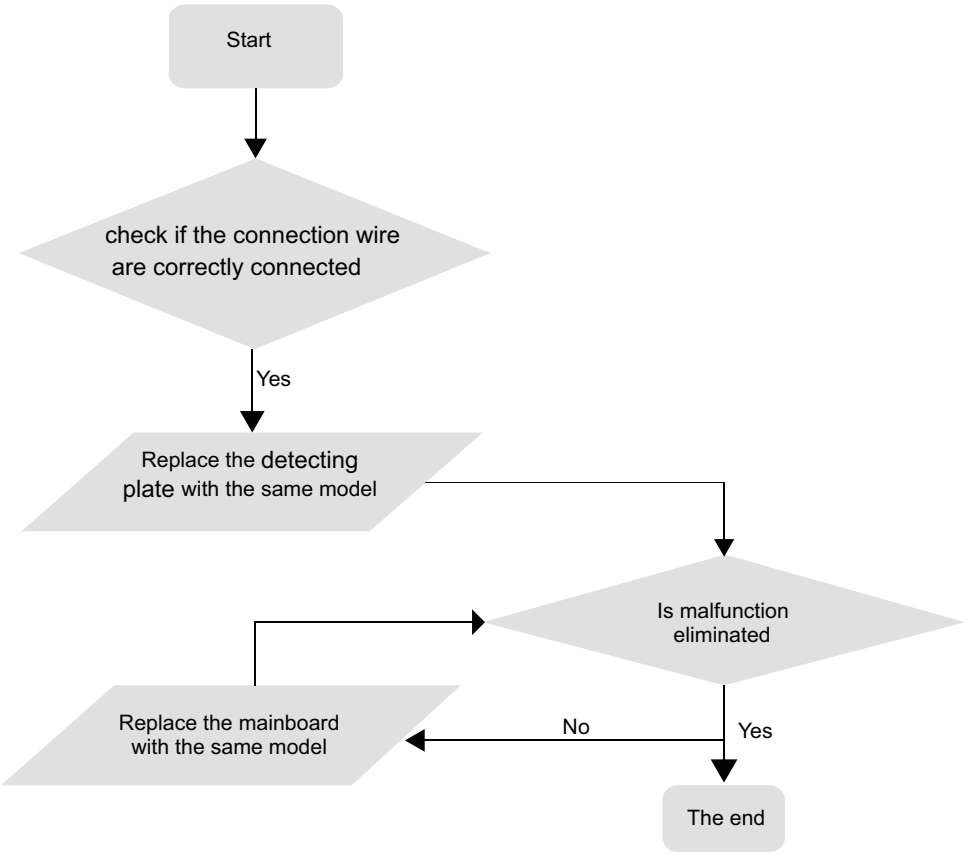

●Outdoor unit:

1.Capacity charging malfunction (outdoor unit malfunction) (AP1 below is control board of outdoor unit)

Main detection point:

● Detect if the voltage of L and N terminal of wiring board is between 210AC-240AC by alternating voltage meter;
● Is reactor (L) well connected? Is connection wire loosened or pull-out? Is reactor (L) damaged?

Malfunction diagnosis process:

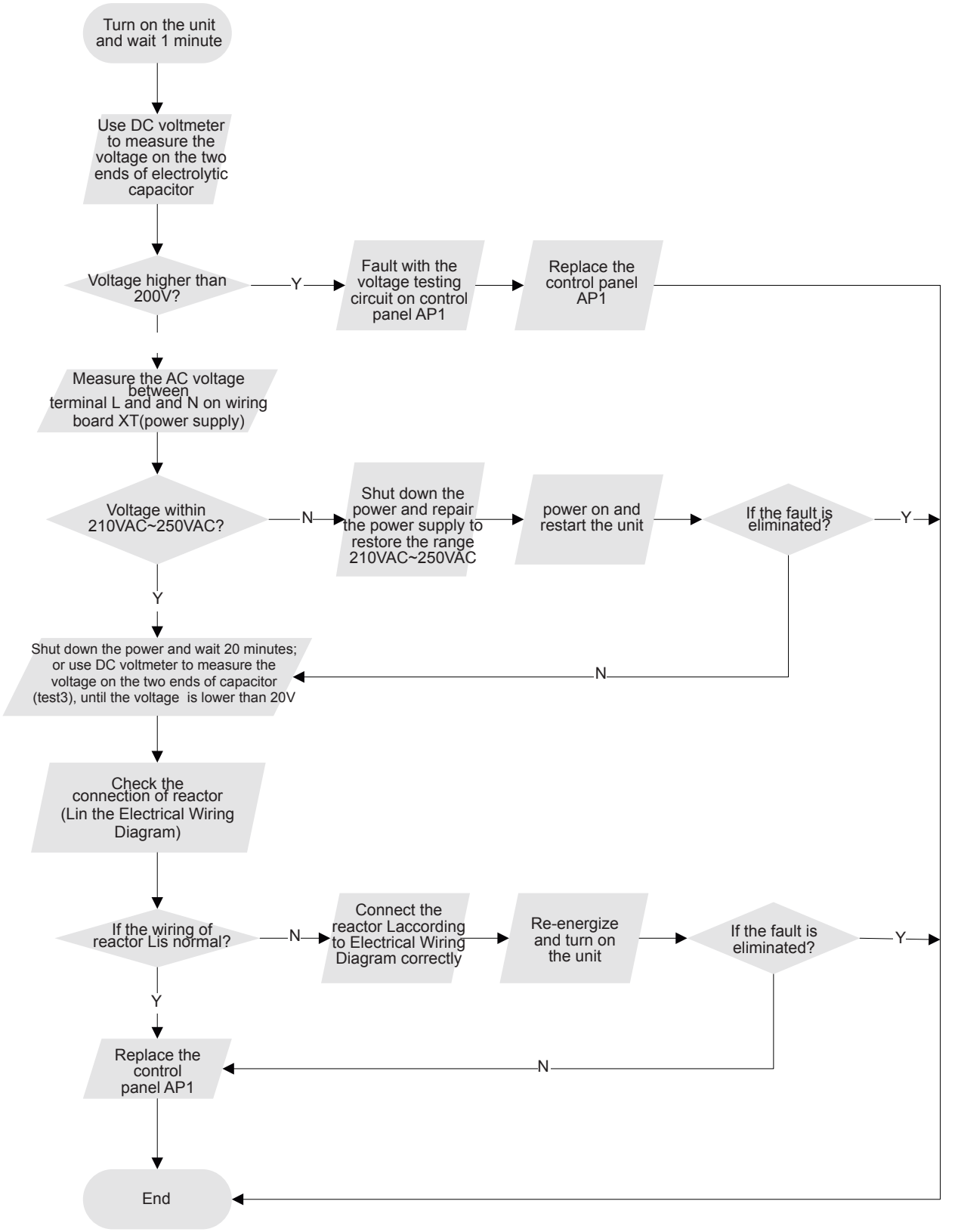

2.Diagnosis for anti-high temperature, overload protection (AP1 below is control board of outdoor unit)

Main detection point:

- If the outdoor ambient temperature is in normal range;
- If the indoor and outdoor fan is running normal;
- If the radiating environment of indoor and outdoor unit is well.

Malfunction diagnosis process:

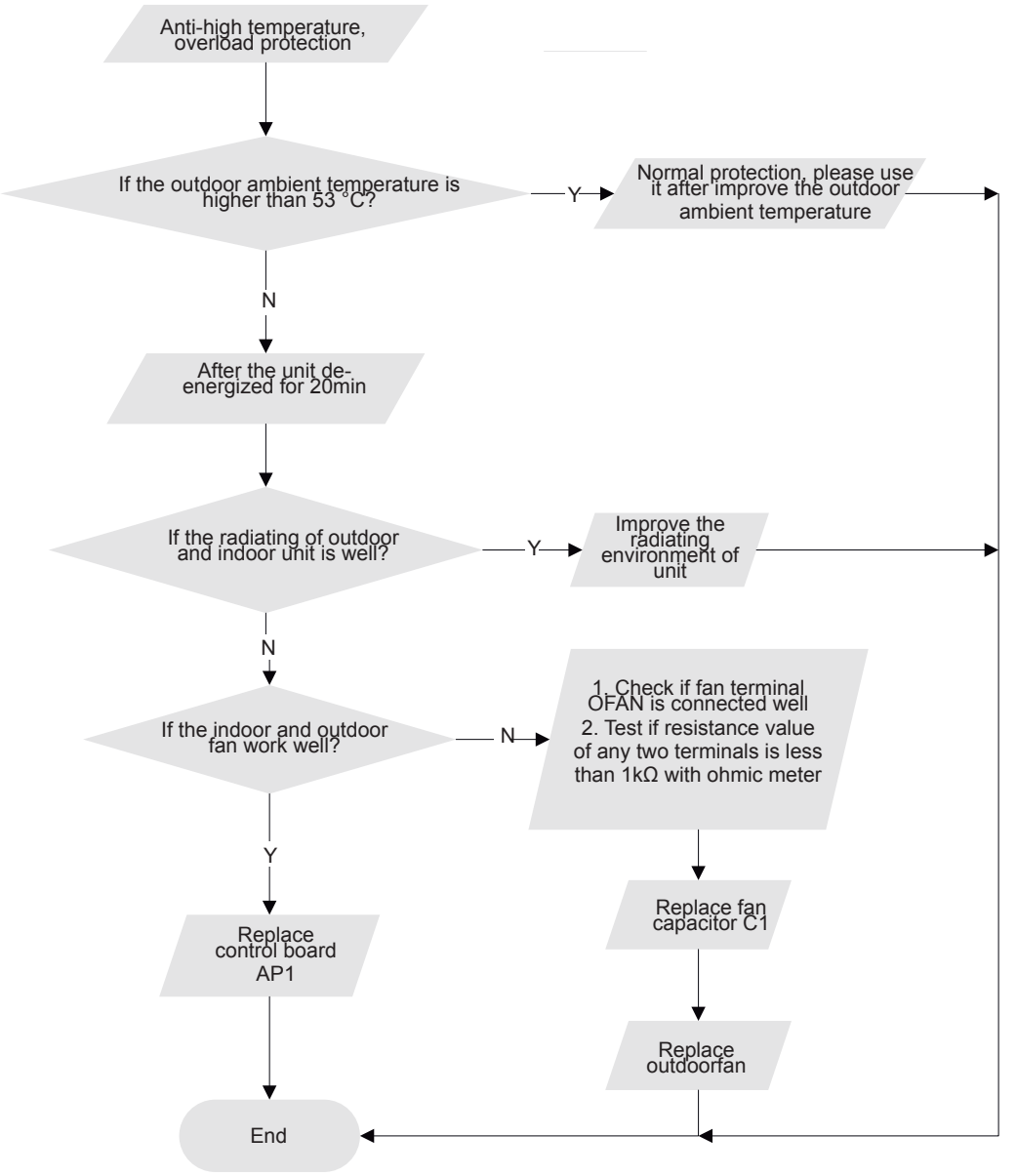

3.IPM protection, phase current overcurrent (the control board as below indicates the control board of outdoor unit) H5/P5

Mainly detect:

(1) Compressor COMP terminal (2) voltage of power supply (3) compressor
(4) Refrigerant-charging volume (5) air outlet and air inlet of outdoor/indoor unit

Troubleshooting:

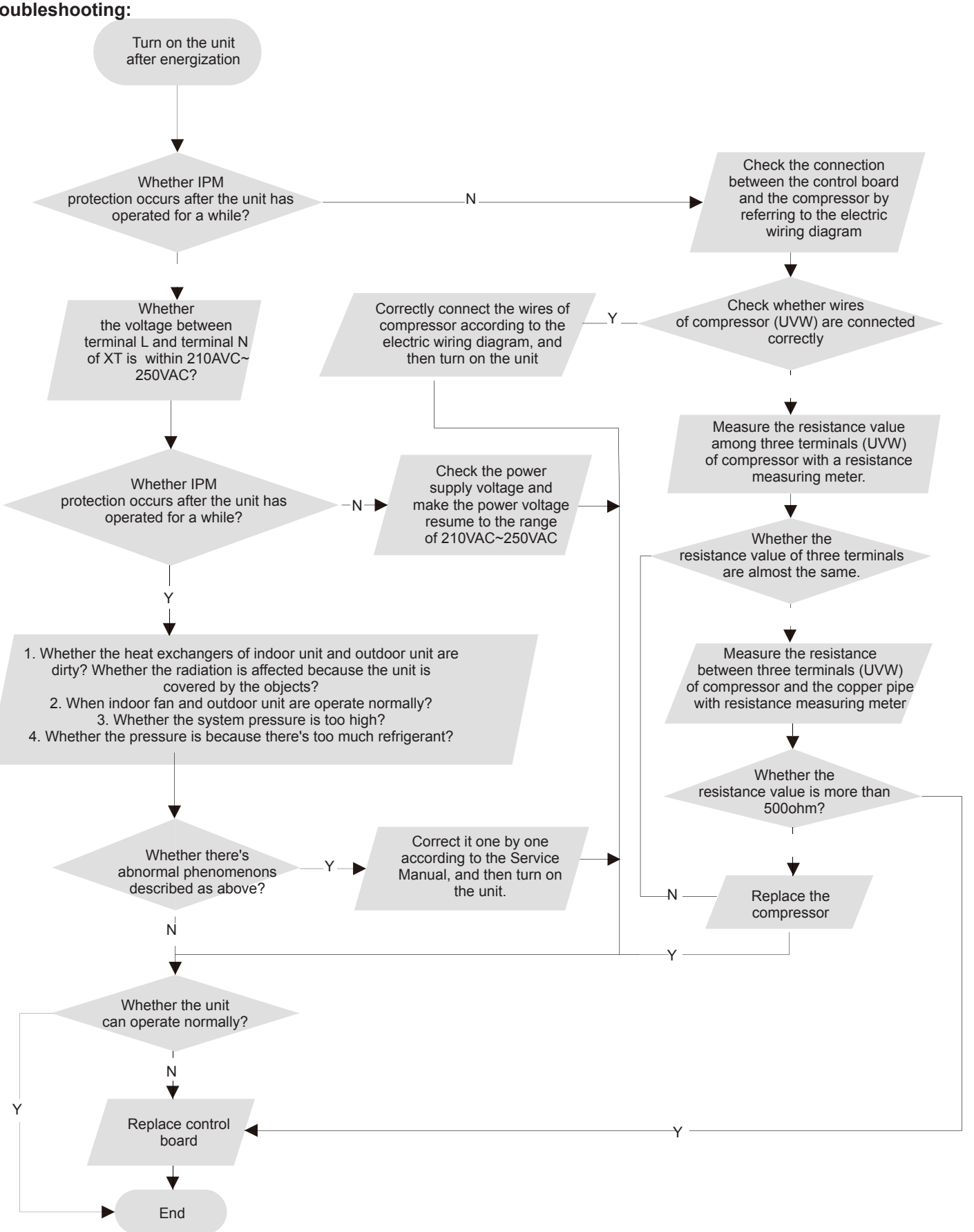

4. Start-up failure (following AP1 for outdoor unit control board)

Mainly detect:
●Whether the compressor wiring is connected correct?
●Is compressor broken?
●Is time for compressor stopping enough?
Fault diagnosis process:

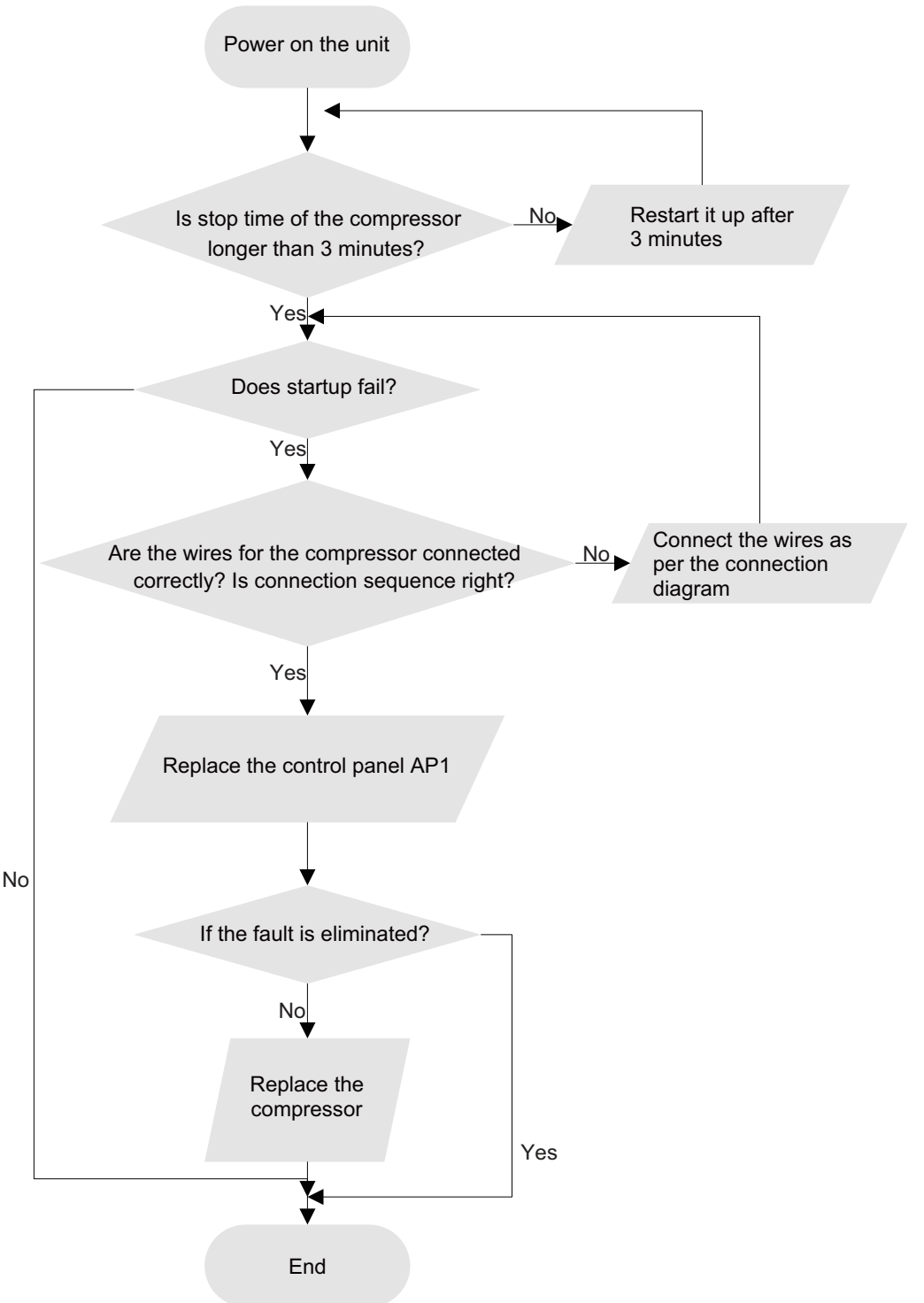

5. Out of step diagnosis for the compressor (AP1 hereinafter refers to the control board of the outdoor unit)

Mainly detect:
●Is the system pressure too high?
●Is the input voltage too low?
Fault diagnosis process:

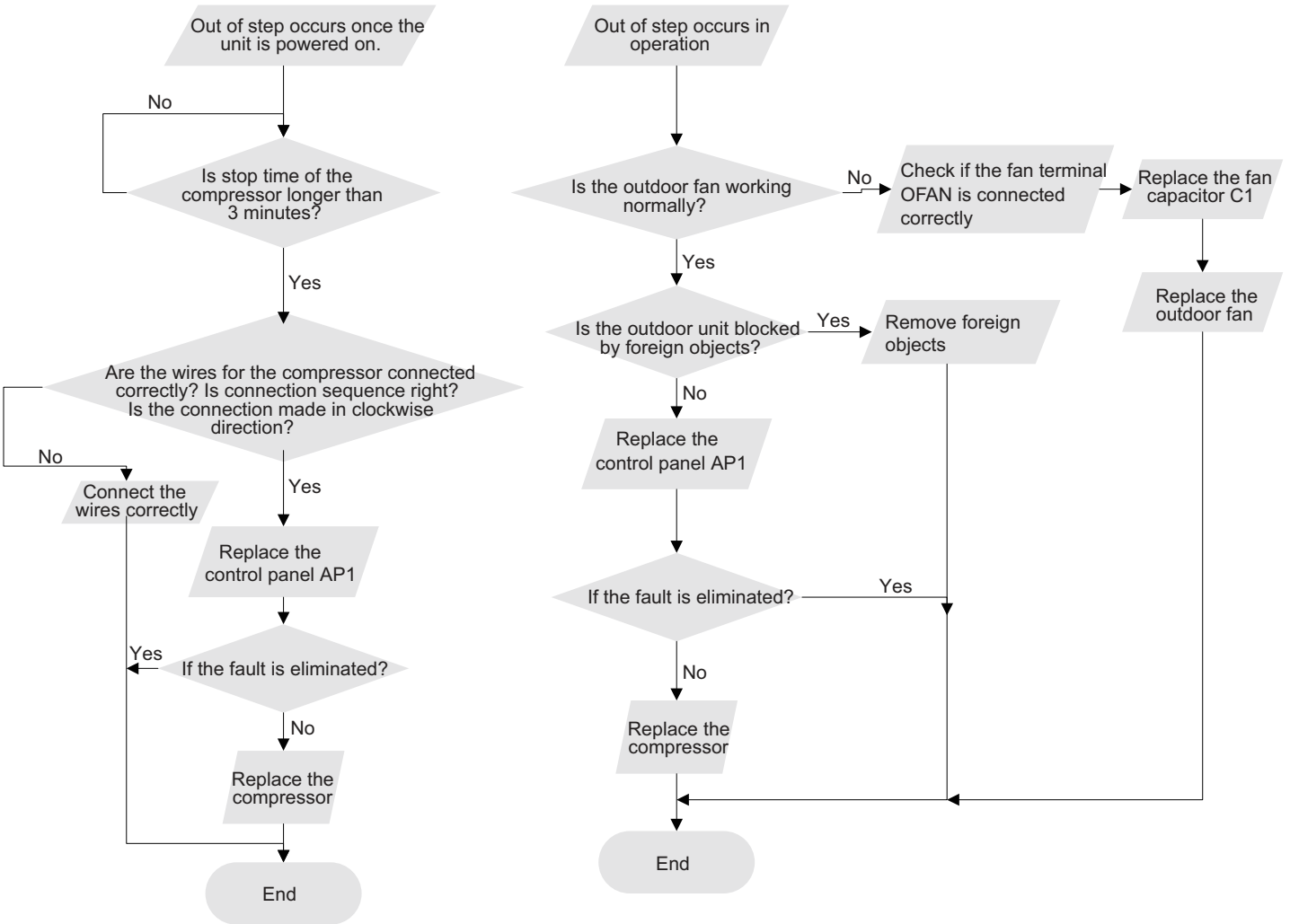

6. Overload and air exhaust malfunction diagnosis (following AP1 for outdoor unit control board)

Mainly detect:
●Is the PMV connected well or not? Is PMV damaged?
●Is refrigerant leaked?
Fault diagnosis process:

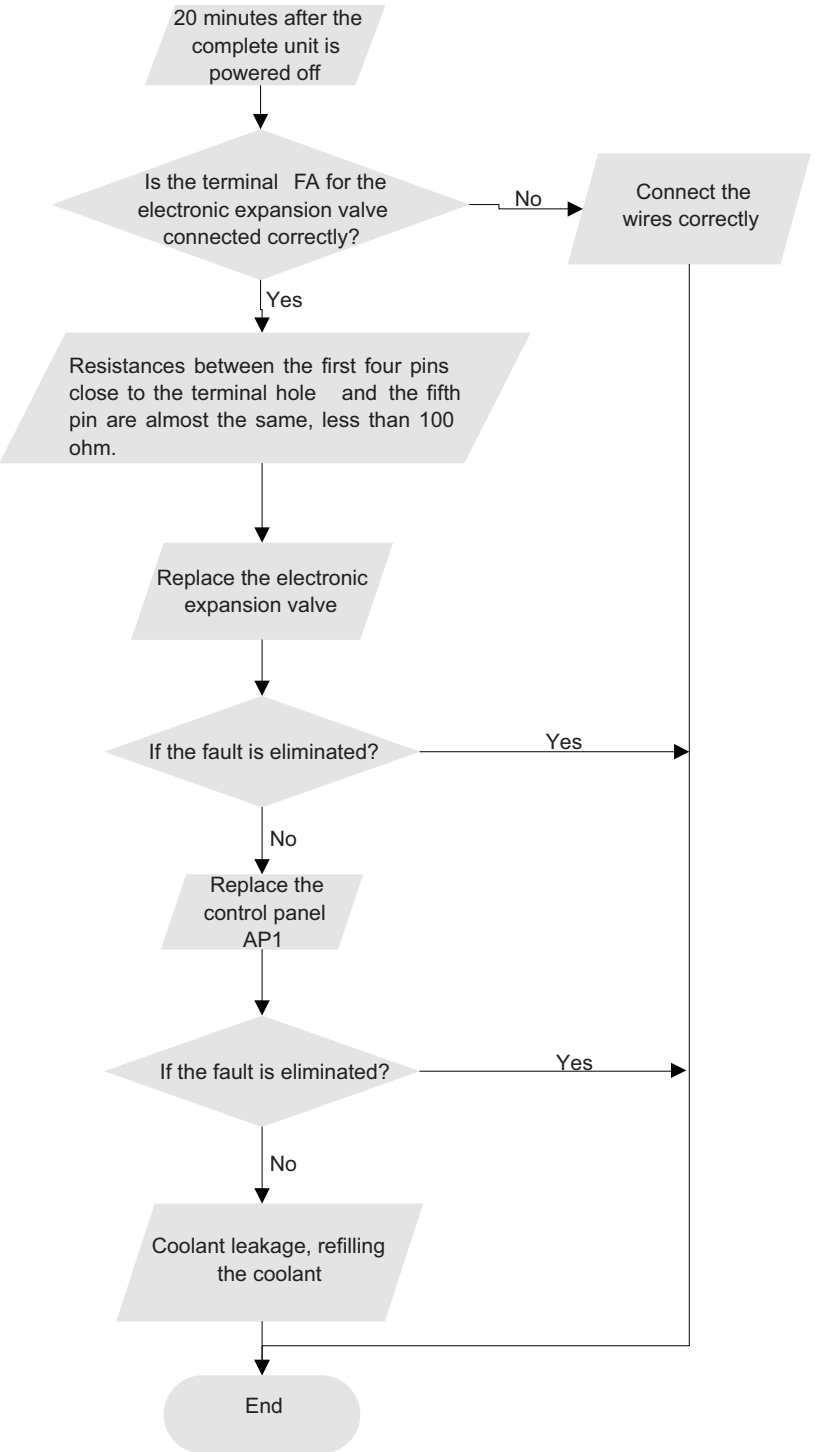

7. Communication malfunction: (following AP1 for outdoor unit control board)

Mainly detect:

●Is there any damage for the indoor unit mainboard communication circuit? Is communication circuit damaged?

●Detect the indoor and outdoor units connection wire and indoor and outdoor units inside wiring is connect well or not, if is there any
damage?

Fault diagnosis process:

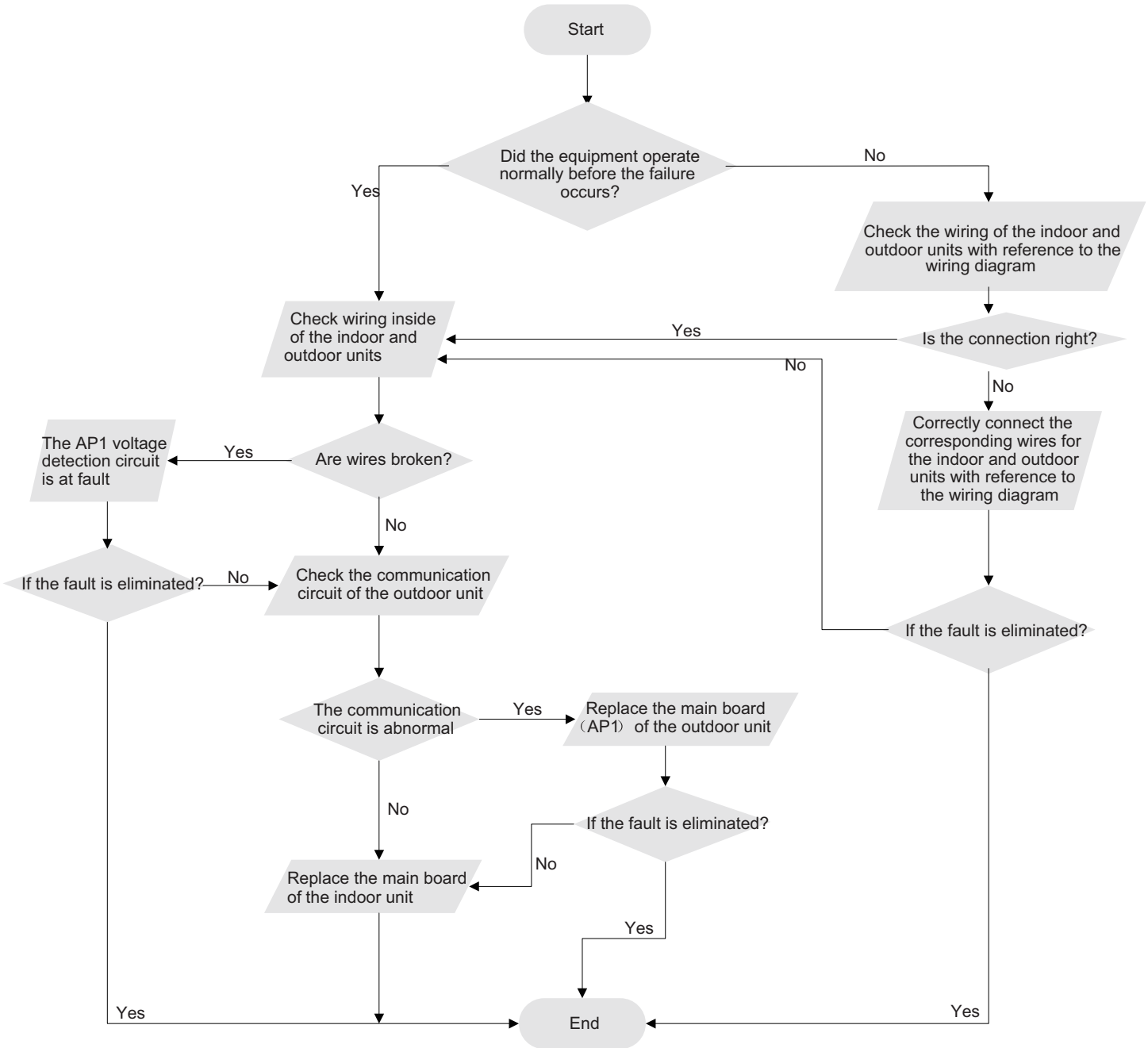

8. Malfunction of Overcurrent Protection

Main detection points:

- Is the supply voltage unstable with big fluctuation?
- Is the supply voltage too low with overload?
- Hardware trouble?

Malfunction diagnosis process:

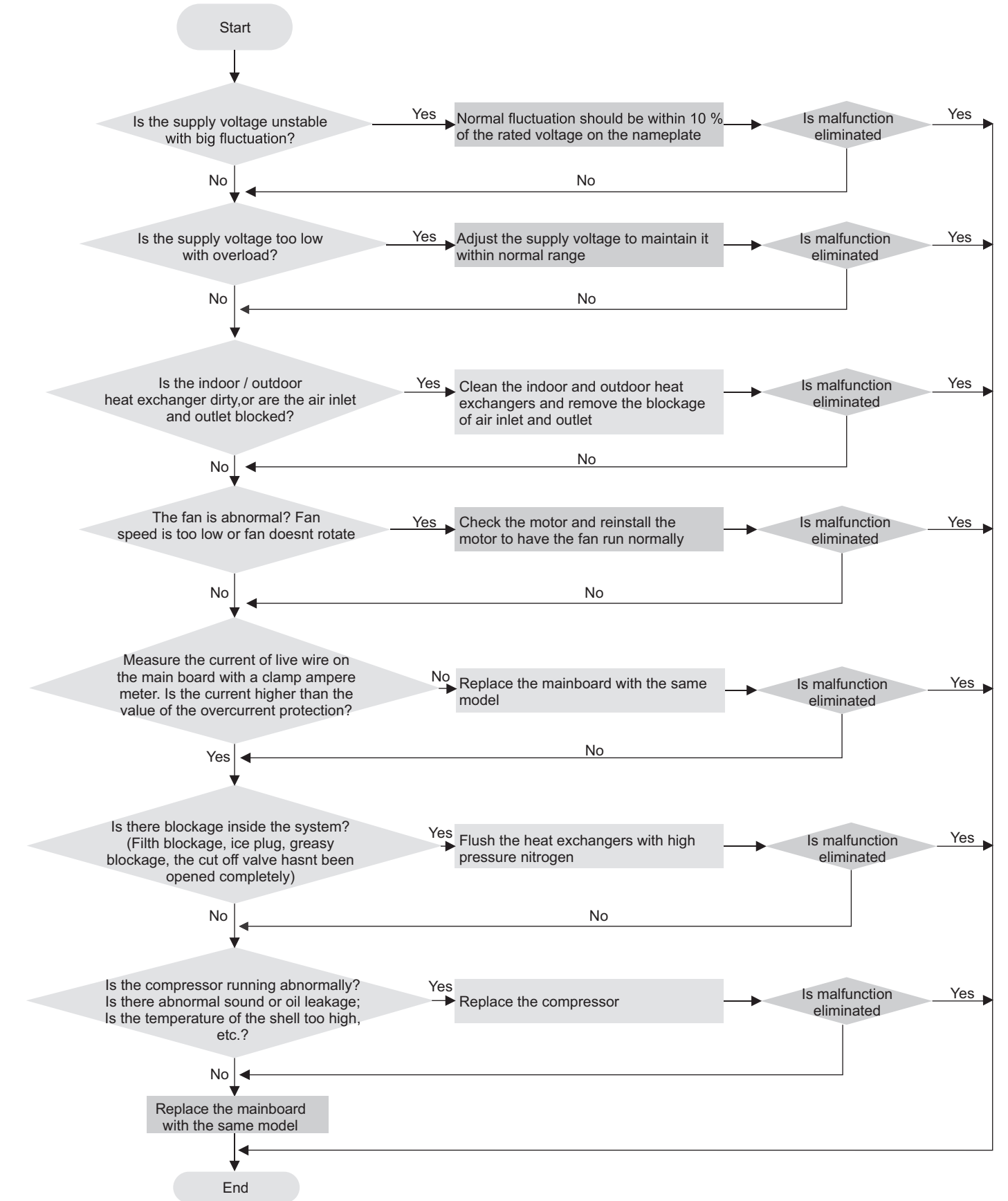

9.3 Troubleshooting for Normal Malfunction

1. Air Conditioner Cant be Started Up

Possible Causes	Discriminating Method (Air conditioner Status)	Troubleshooting
No power supply, or poor connection for power plug	After energization, operation indicator isnt bright and the buzzer cant give out sound	Confirm whether its due to power failure. If yes, wait for power recovery. If not, check power supply circuit and make sure the power plug is connected well.
Wrong wire connection between indoor unit and outdoor unit, or poor connection for wiring terminals	Under normal power supply circumstances, operation indicator isnt bright after energization	Check the circuit according to circuit diagram and connect wires correctly. Make sure all wiring terminals are connected firmly
Electric leakage for air conditioner	After energization, room circuit breaker trips off at once	Make sure the air conditioner is grounded reliably Make sure wires of air conditioner is connected correctly Check the wiring inside air conditioner. Check whether the insulation layer of power cord is damaged; if yes, place the power cord.
Model selection for air switch is improper	After energization, air switch trips off	Select proper air switch
Malfunction of remote controller	After energization, operation indicator is bright, while no display on remote controller or buttons have no action.	Replace batteries for remote controller Repair or replace remote controller

2. Poor Cooling (Heating) for Air Conditioner

Possible Causes	Discriminating Method (Air conditioner Status)	Troubleshooting
Set temperature is improper	Observe the set temperature on remote controller	Adjust the set temperature
Rotation speed of the IDU fan motor is set too low	Small wind blow	Set the fan speed at high or medium
Filter of indoor unit is blocked	Check the filter to see its blocked	Clean the filter
Installation position for indoor unit and outdoor unit is improper	Check whether the installation postion is proper according to installation requirement for air conditioner	Adjust the installation position, and install the rainproof and sunproof for outdoor unit
Refrigerant is leaking	Discharged air temperature during cooling is higher than normal discharged wind temperature; Discharged air temperature during heating is lower than normal discharged wind temperature; Units pressure is much lower than regulated range	Find out the leakage causes and deal with it. Add refrigerant.
Malfunction of 4-way valve	Blow cold wind during heating	Replace the 4-way valve
Malfunction of capillary	Discharged air temperature during cooling is higher than normal discharged wind temperature; Discharged air temperature during heating is lower than normal discharged wind temperature; Unitt pressure is much lower than regulated range. If refrigerant isnt leaking, part of capillary is blocked	Replace the capillary
Flow volume of valve is insufficient	The pressure of valves is much lower than that stated in the specification	Open the valve completely
Malfunction of horizontal louver	Horizontal louver cant swing	Refer to point 3 of maintenance method for details
Malfunction of the IDU fan motor	The IDU fan motor cant operate	Refer to troubleshooting for H6 for maintenance method in details
Malfunction of the ODU fan motor	The ODU fan motor cant operate	Refer to point 4 of maintenance method for details
Malfunction of compressor	Compressor cant operate	Refer to point 5 of maintenance method for details

3. Horizontal Louver Cant Swing

Possible Causes	Discriminating Method (Air conditioner Status)	Troubleshooting
Wrong wire connection, or poor connection	Check the wiring status according to circuit diagram	Connect wires according to wiring diagram to make sure all wiring terminals are connected firmly
Stepping motor is damaged	Stepping motor cant operate	Repair or replace stepping motor
Main board is damaged	Others are all normal, while horizontal louver cant operate	Replace the main board with the same model

4. ODU Fan Motor Cant Operate

Possible causes	Discriminating method (air conditioner status)	Troubleshooting
Wrong wire connection, or poor connection	Check the wiring status according to circuit diagram	Connect wires according to wiring diagram to make sure all wiring terminals are connected firmly
Capacity of the ODU fan motor is damaged	Measure the capacity of fan capacitor with an universal meter and find that the capacity is out of the deviation range indicated on the nameplate of fan capacitor.	Replace the capacity of fan
Power voltage is a little low or high	Use universal meter to measure the power supply voltage. The voltage is a little high or low	Suggest to equip with voltage regulator
Motor of outdoor unit is damaged	When unit is on, cooling/heating performance is bad and ODU compressor generates a lot of noise and heat.	Change compressor oil and refrigerant. If no better, replace the compressor with a new one

5. Compressor Cant Operate

Possible causes	Discriminating method (air conditioner status)	Troubleshooting
Wrong wire connection, or poor connection	Check the wiring status according to circuit diagram	Connect wires according to wiring diagram to make sure all wiring terminals are connected firmly
Capacity of compressor is damaged	Measure the capacity of fan capacitor with an universal meter and find that the capacity is out of the deviation range indicated on the nameplate of fan capacitor.	Replace the compressor capacitor
Power voltage is a little low or high	Use universal meter to measure the power supply voltage. The voltage is a little high or low	Suggest to equip with voltage regulator
Coil of compressor is burnt out	Use universal meter to measure the resistance between compressor terminals and its 0	Repair or replace compressor
Cylinder of compressor is blocked	Compressor cant operate	Repair or replace compressor

6. Air Conditioner is Leaking

Possible causes	Discriminating method (air conditioner status)	Troubleshooting
Drain pipe is blocked	Water leaking from indoor unit	Eliminate the foreign objects inside the drain pipe
Drain pipe is broken	Water leaking from drain pipe	Replace drain pipe
Wrapping is not tight	Water leaking from the pipe connection place of indoor unit	Wrap it again and bundle it tightly

7. Abnormal Sound and Vibration

Possible causes	Discriminating method (air conditioner status)	Troubleshooting
When turn on or turn off the unit, the panel and other parts will expand and theres abnormal sound	Theres the sound of "PAPA"	Normal phenomenon. Abnormal sound will disappear after a few minutes.
When turn on or turn off the unit, theres abnormal sound due to flow of refrigerant inside air conditioner	Water-running sound can be heard	Normal phenomenon. Abnormal sound will disappear after a few minutes.
Foreign objects inside the indoor unit or therere parts touching together inside the indoor unit	Theres abnormal sound fro indoor unit	Remove foreign objects. Adjust all parts position of indoor unit, tighten screws and stick damping plaster between connected parts
Foreign objects inside the outdoor unit or therere parts touching together inside the outdoor unit	Theres abnormal sound fro outdoor unit	Remove foreign objects. Adjust all parts position of outdoor unit, tighten screws and stick damping plaster between connected parts
Short circuit inside the magnetic coil	During heating, the way valve has abnormal electromagnetic sound	Replace magnetic coil
Abnormal shake of compressor	Outdoor unit gives out abnormal sound	Adjust the support foot mat of compressor, tighten the bolts
Abnormal sound inside the compressor	Abnormal sound inside the compressor	If add too much refrigerant during maintenance, please reduce refrigerant properly. Replace compressor for other circumstances.

10. Exploded View and Parts List

10.1 Indoor Unit

SIH-24BIK

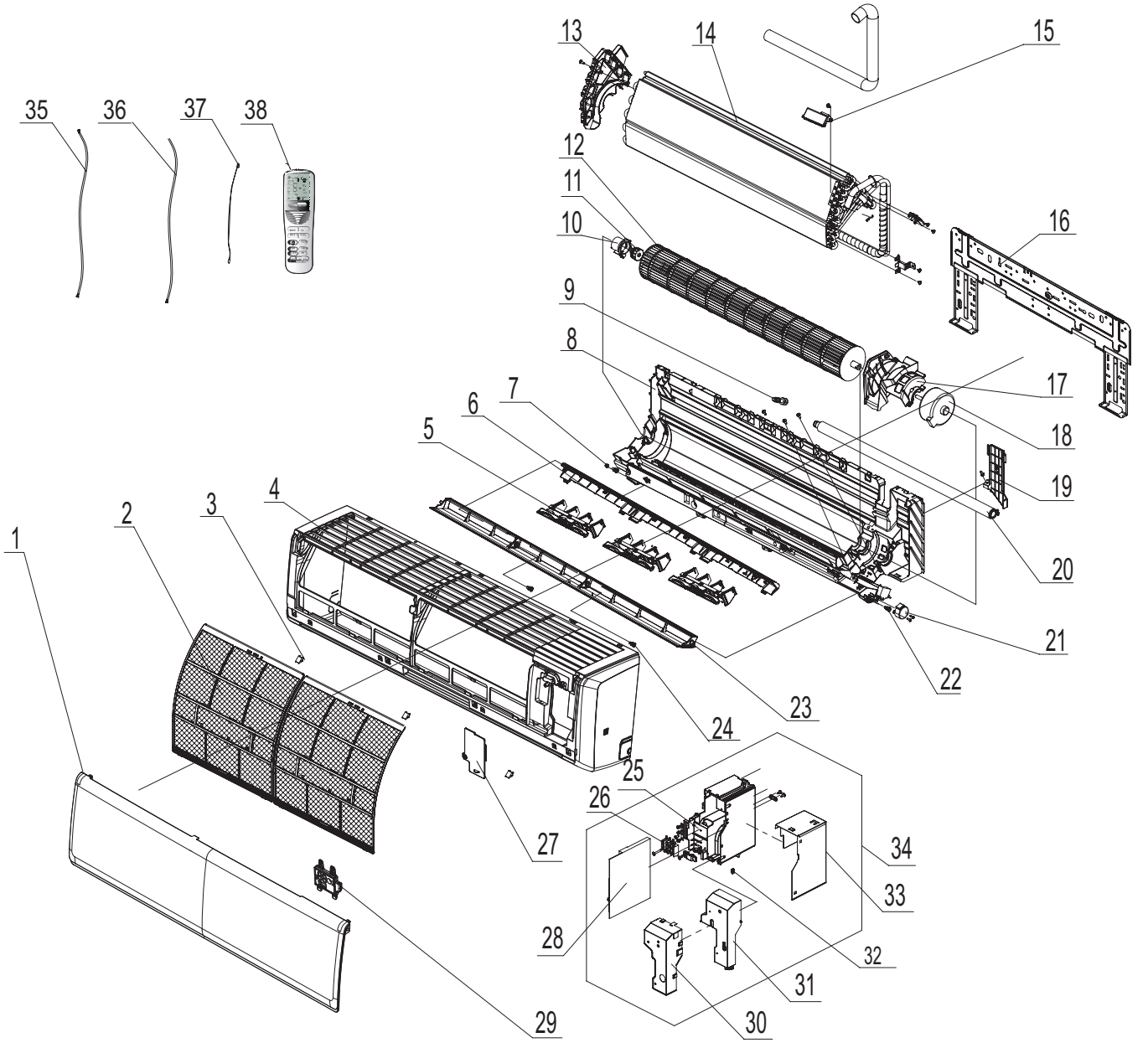

The component picture is only for reference; please refer to the actual product.

NO.	Description	Part Code
1	Front Panel	200003060198T
2	Filter Sub-Assy	1101200703
3	Screw Cover	24252453
4	Front Case	200002060050
5	Air Louver	10512744
6	Helicoid Tongue sub-assy	26112384
7	Left Axile Bush	10512037
8	Rear Case assy	000001000040
9	Rubber Plug (Water Tray)	76712012
10	Ring of Bearing	26152025
11	O-Gasket sub-assy of Bearing	76512051
12	Cross Flow Fan	10352057
13	Evaporator Support	24212178
14	Evaporator Assy	011001060959
15	Cold Plasma Generator	1114001602
16	Wall Mounting Frame	01252229
17	Motor Press Plate	26112515
18	Fan Motor	15012145
19	Connecting pipe clamp	26112514
20	Drainage Hose	0523001405
21	Stepping Motor	1521240210
22	Crank	73012005
23	Guide Louver	200004060101
24	Axile Bush	10542036
25	Electric Box	2011221105
26	Terminal Board	42011233
27	Electric Box Cover2	20112210
28	Main Board	300002062433
29	Display Board	300001000037
30	Shield Cover of Electric Box Cover	01592176
31	Electric Box Cover	20112209
32	Jumper	4202021916
33	Lower Shield of Electric Box	01592139
34	Electric Box Assy	100002073225
35	Connecting Cable	4002052317
36	Connecting Cable	-
37	Temperature Sensor	3900031302
38	Remote Controller	305001000078

Some models may not contain some parts, please refer to the actual product.

10.2 Outdoor Unit

SOH-24BIK

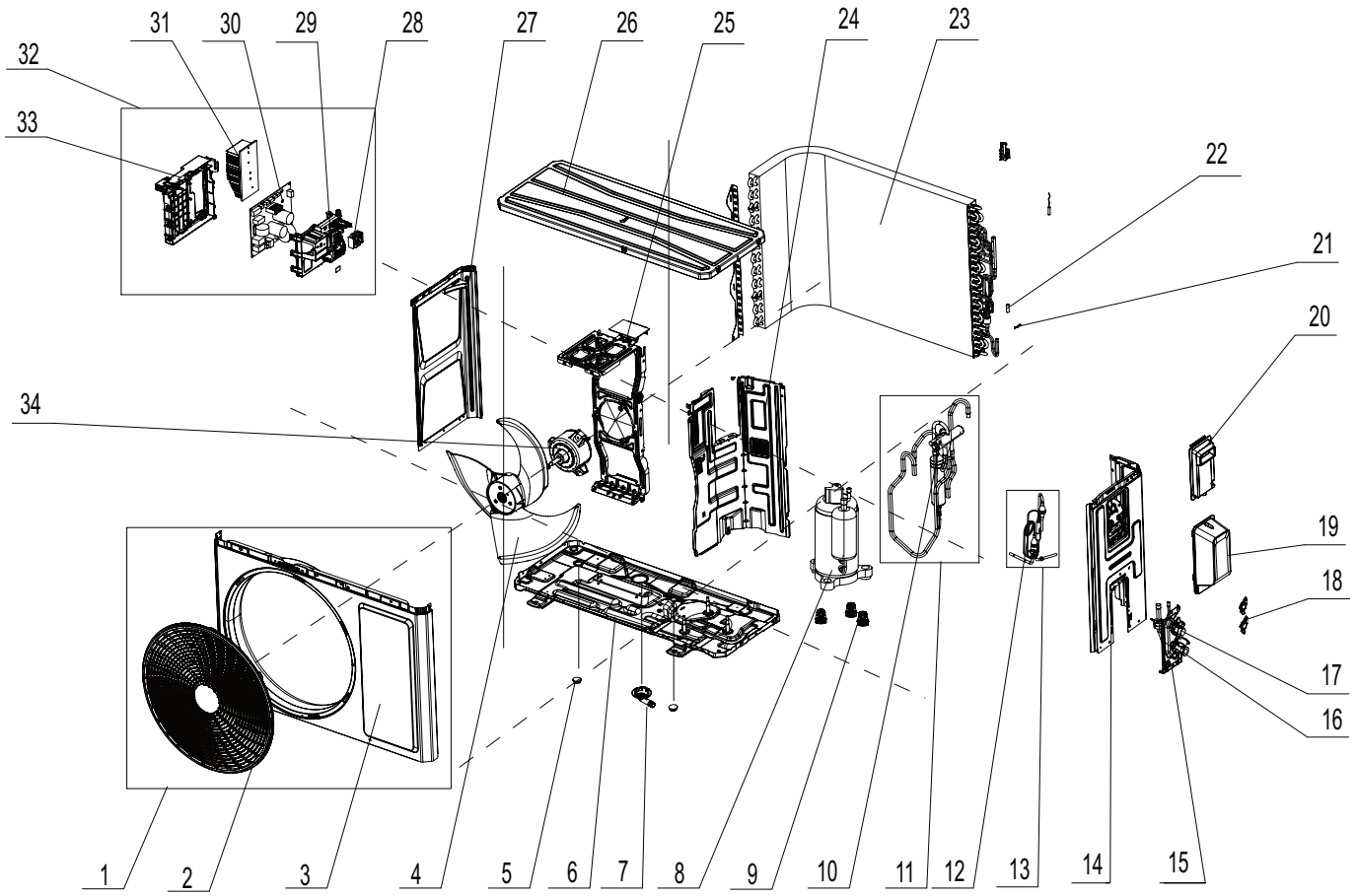

The component is only for rererence;please refer to the actual product

NO.	Description	Part Code
1	Front Panel Assy	000003060525
2	Front grill	200057060018
3	Cabinet	012022060011P
4	Axial Flow Fan	10333014
5	Drainage hole Cap	76711012
6	Chassis Sub-assy	017000060596P
7	Drainage Joint	26113009
8	Compressor and Fittings	009001060617
9	Compressor Gasket	009033060003
10	4-Way Valve	430004032
11	4-Way Valve Assy	030152060743
12	Capillary Tube	-
13	Capillary Tube assy	-
14	Right Side Plate Assy	000081060191
15	Valve Support	012044060022P
16	Cut-off valve 1/2(N)	070001060024
17	Cut-off valve 1/4(N)	070001060022
18	Valve Support Block	26113017
19	Valve Cover	200087060005
20	handle	-
21	Sensor Insert	42020063
22	Temp Sensor Sleeving	05212423
23	Condenser Assy	011002061459
24	Clapboard Assy	000075060125
25	Motor Support	012048060148
26	Top Cover Assy	000097060315
27	Left Side Plate	012055060392P
28	Terminal Board	422000060075
29	Electric Box Cover	-
30	Main Board	300027061962
31	Radiator	430034060118
32	Electric Box Assy	100002073223
33	IElectric Box	-
34	Brushless DC Motor	150104060085

Some models may not contain some parts, please refer to the actual product.

11. Removal Procedure

11.1 Removal Procedure of Indoor Unit

⚠ **Caution: discharge the refrigerant completely before removal.**

Step	Procedure	
1.Remove filter		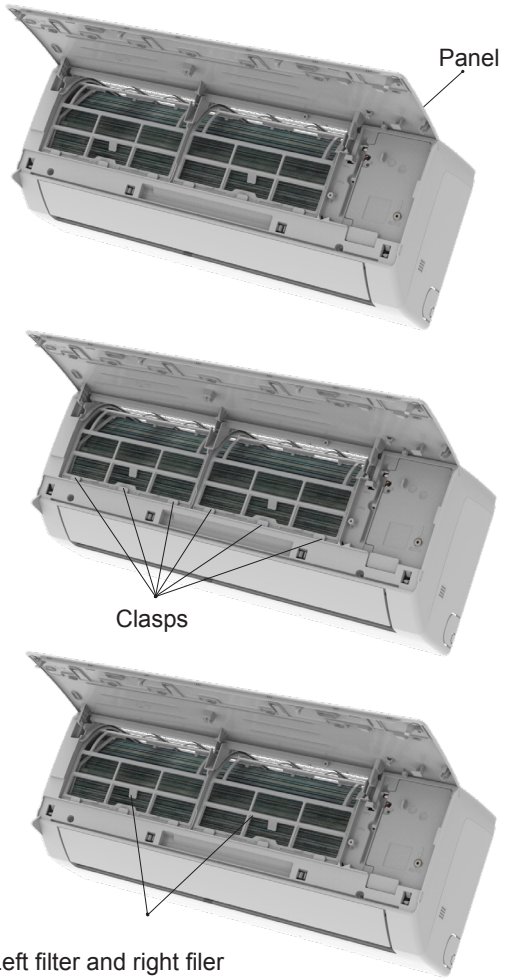
a	Open the panel.	
b	Loosen the clasp shown in the fig and then pull the left filter and right filer outwards to remove them.	
2.Remove horizontal louver		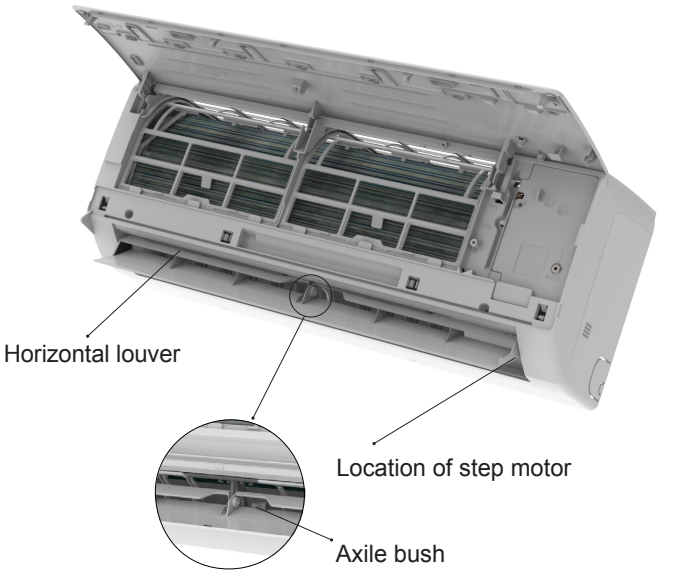
	Push out the axile bush on horizontal louver. Bend the horizontal louver with hand and then separate the horizontal louver from the crankshaft of step motor to remove it.	

Step	Procedure
3.Remove panel	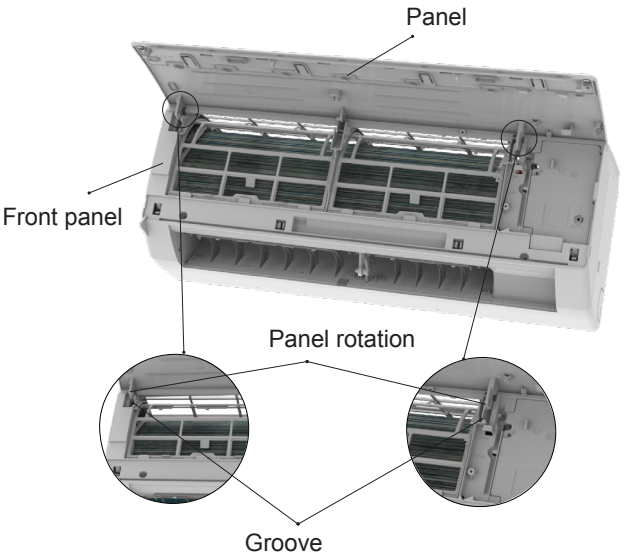
Open the front panel; separate the panel rotation shaft from the groove fixing the front panel and then removes the front panel. Note: The display of some models is fixed on the panel; unscrew the screws fixing the display on the panel before removing the panel.	
4.Remove electric box cover 2	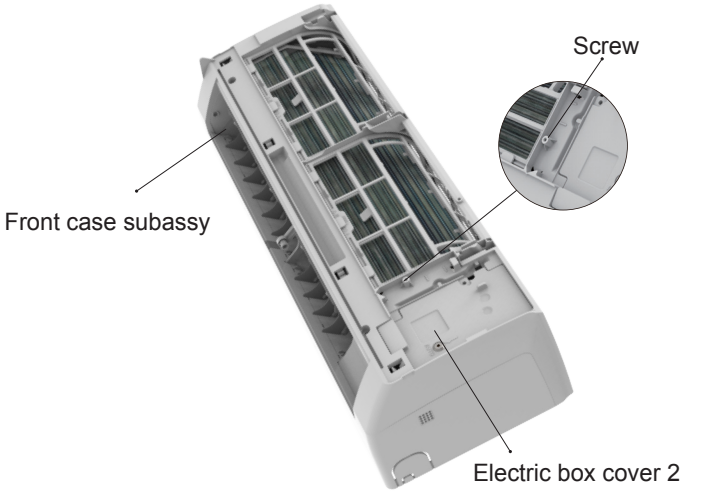
Remove the screws on the electric box cover 2 to remove the electric box cover 2.	
5.Remove front case sub-assy	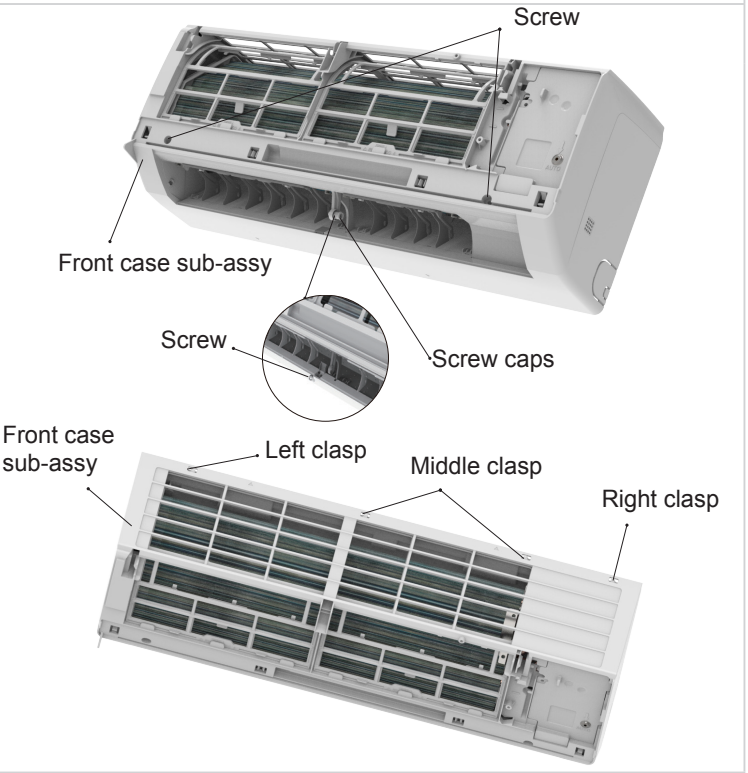
Remove the screws fixing front case. Note: a (1) Open the screw caps before removing the screws around the air outlet. (2) The quantity of screws fixing the front case sub-assy is different for different models. b Loosen the clasps at left, middle and right sides of front case. Life the front case sub-assy upwards to remove it.	

Step	Procedure
6.Remove electric box assy	
a	Loosen the connection clasps between Cold plasma generator and electric box, and then remove the cold plasma generator.
b	① Cut off the wire binder and pull out the indoor tube temperature sensor. ② Screw off one grounding screw. ③ Remove the wiring terminals of motor andstepping motor. ④ Remove the electric box assy. ⑤ Screw off the screws that are locking each.
c	Rotate the electric box assy. Twist off the screws that are locking the wire clip and loosen the power cord. Remove the wiring terminal of power cord. Lift up the main board and take it off.
	Instruction: Some wiring terminal of this product is with lock catch and other devices. The pulling method is as below: 1.Remove the soft sheath for some terminals at first, hold the circlip and then pull out the terminals. 2.Pull out the holder for some terminals at first (holder is not available for some wiring terminal), hold the connector and then pull the terminal.

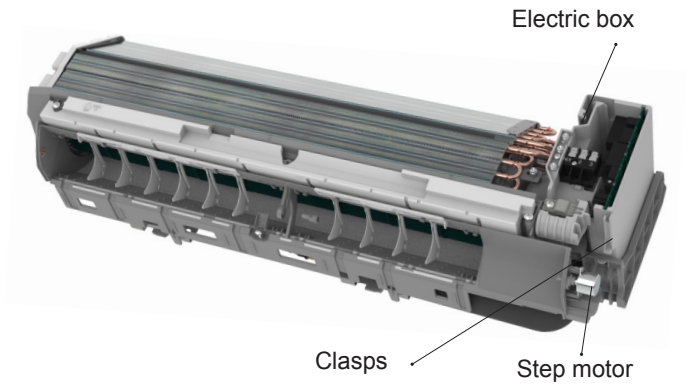

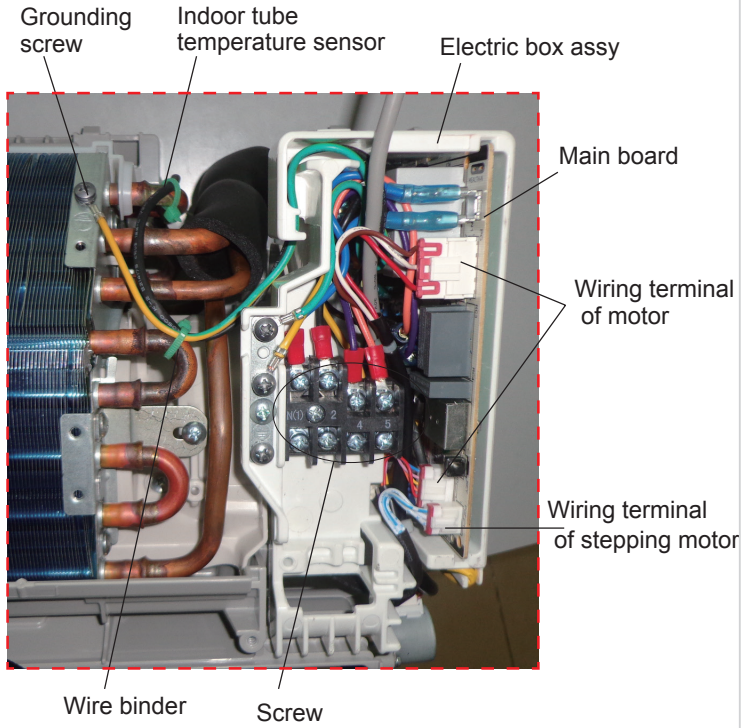

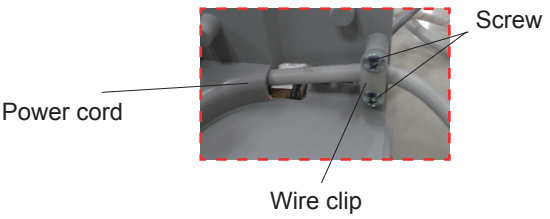

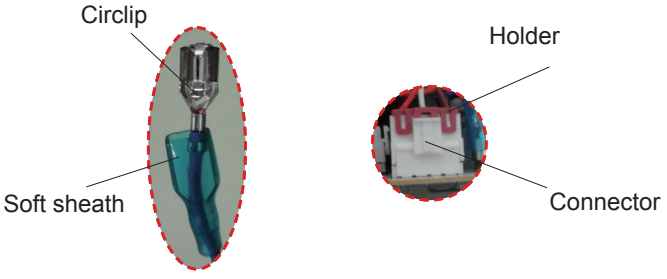

Step	Procedure
7.Remove evaporator assy	
a	Remove 3 screws fixing evaporator assy.
b	At the back of the unit, Loosen the clasp,connection pipe clamp and then remove the connection pipe clamp.
c	First remove the left side of evaporator from the groove of bottom shell and then remove the right side from the clasp on the bottom shell.
d	Adjust the position of connection pipe on evaporator slightly and then lift the evaporator upwards to remove it.

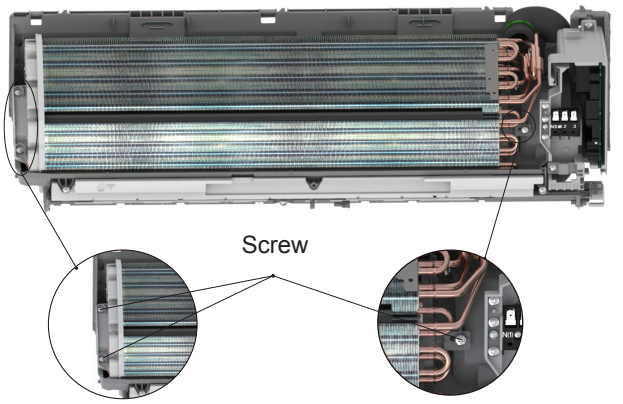

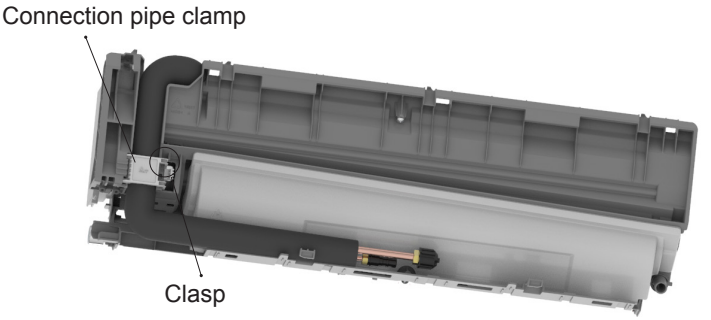

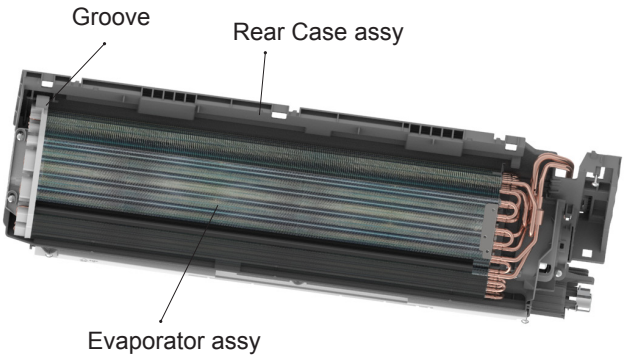

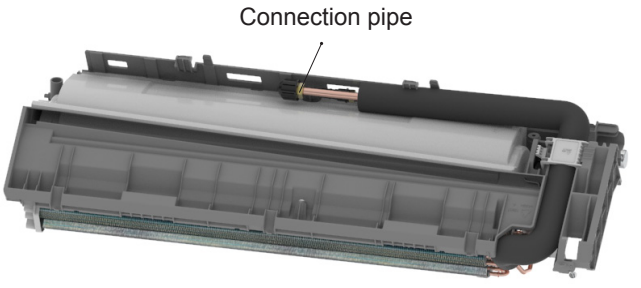

Step	Procedure
8.Remove motor and cross flow blade	
a	Remove 3 screws fixing motor clamp and then remove the motor clamp.
b	Remove the at the connection place of cross flow blade and motor; lift the motor and cross flow blade upwards to remove them.
9.Remove vertical louver	
	Loosen the connection clasps between vertical louver and bottom case to remove vertical louver.

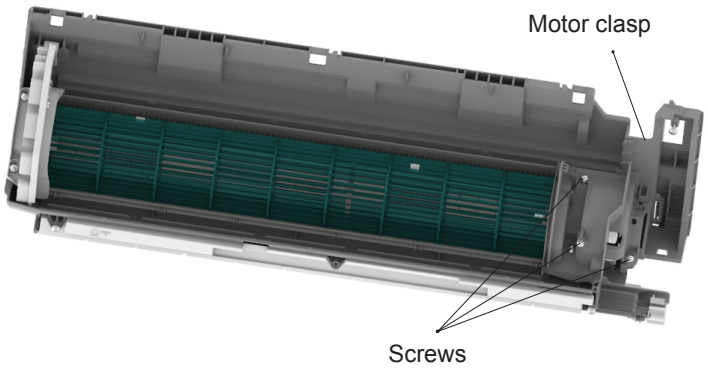

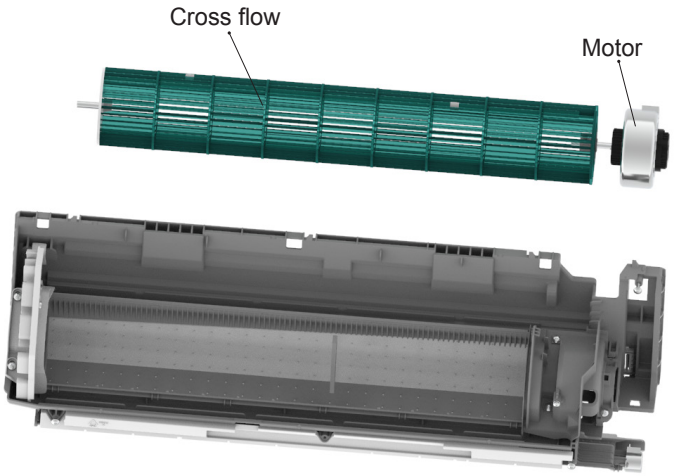

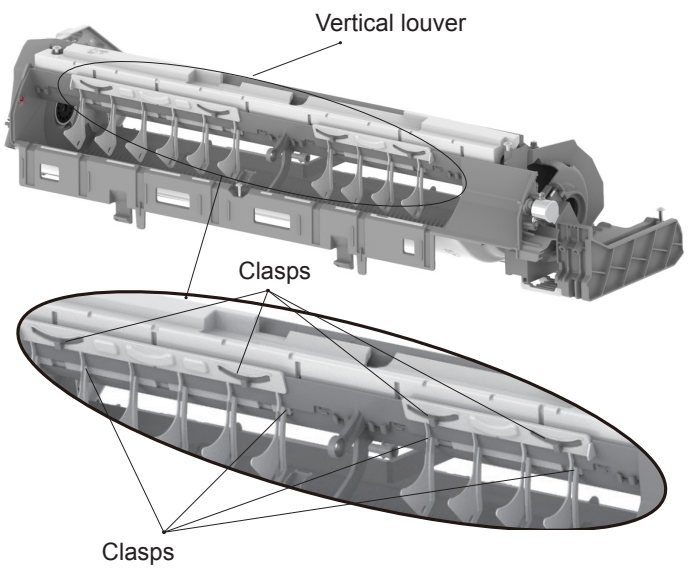

11.2 Removal Procedure of Outdoor Unit

SOH-24BIK

Caution: discharge the refrigerant completely before removal.

Step	Procedure
1. Before disassembly	
2. Remove valve cover Remove the connection screw and then remove the valve cover.	
3. Remove big handle Remove the connection screw and then remove the big handle.	

Step	Procedure
4. Remove top cover	
Remove connection screws connecting the top panel with the front panel and the right side plate, and then remove the top panel.	
5. Remove grille	
Remove connection screws between the front grille and the front panel. Then remove the grille.	
6. Remove front panel	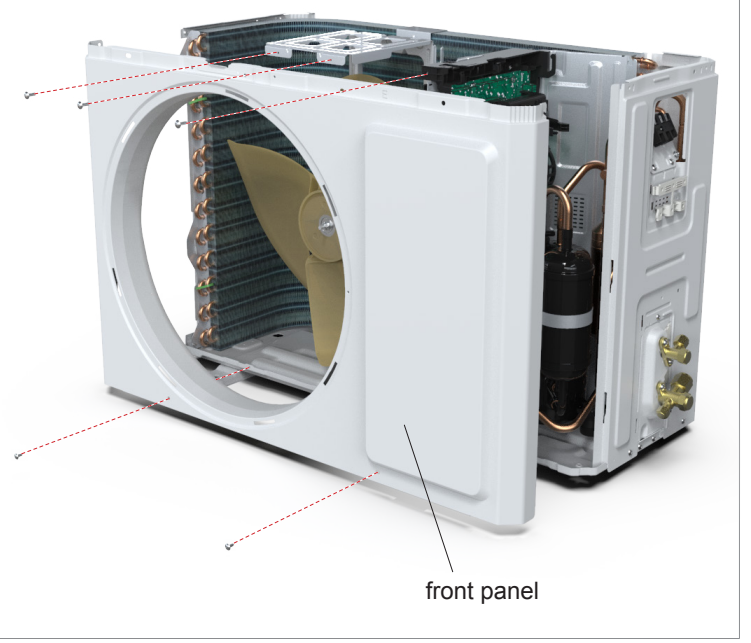
Remove connection screws connecting the front panel with the chassis and the motor support and then remove the front panel.	

Step	Procedure
7. Remove right side plate	
Remove connection screws connecting the right side plate with the valve support and the electric box. Then remove the right side plate.	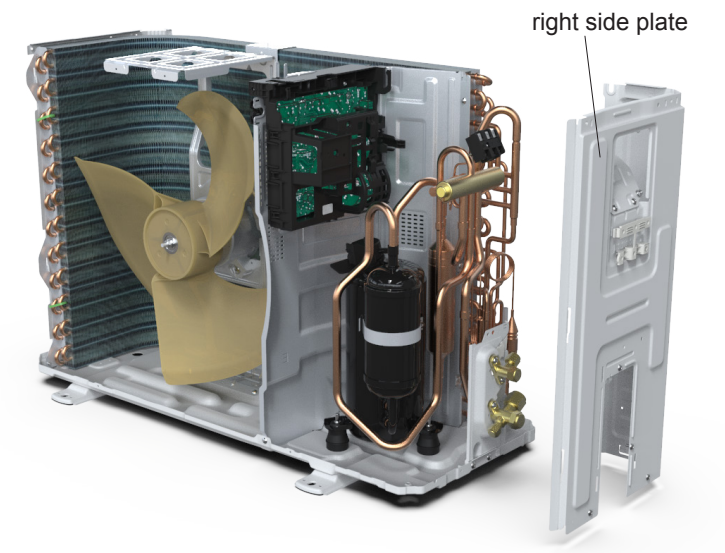
8. Remove the nut and gasket on the blade and then remove the axial flow blade	
Remove the nut and gasket on the blade and then remove the axial flow blade.	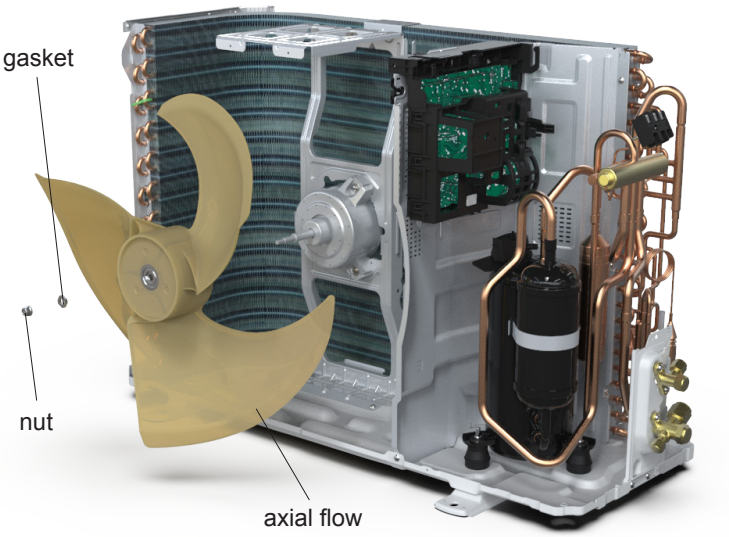
9. Remove motor and motor support	
Remove the tapping screws fixing the motor and disconnect the leading wire insert of the motor. Then remove the motor. Remove the tapping screws fixing the motor support and lift the motor support to remove it.	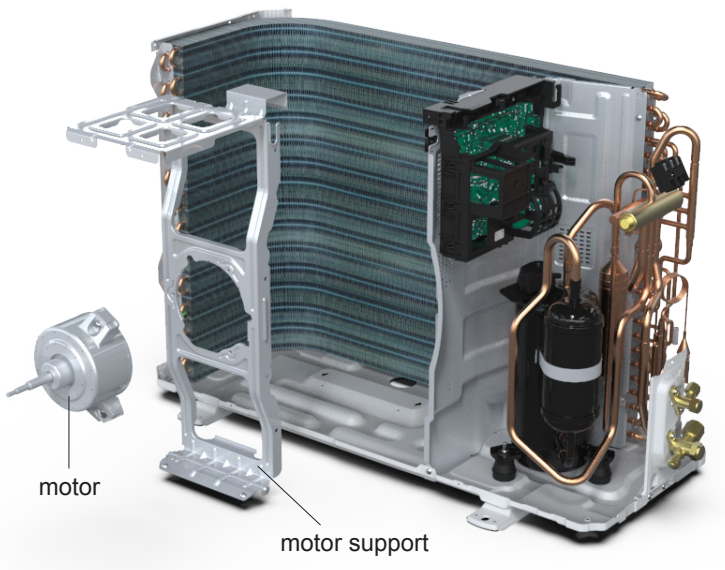

Step	Procedure
10. Remove Electric Box Assy	
Remove screws fixing the electric box subassembly; loosen the wire bundle and unplug the wiring terminals. Then lift the electric box to remove it.	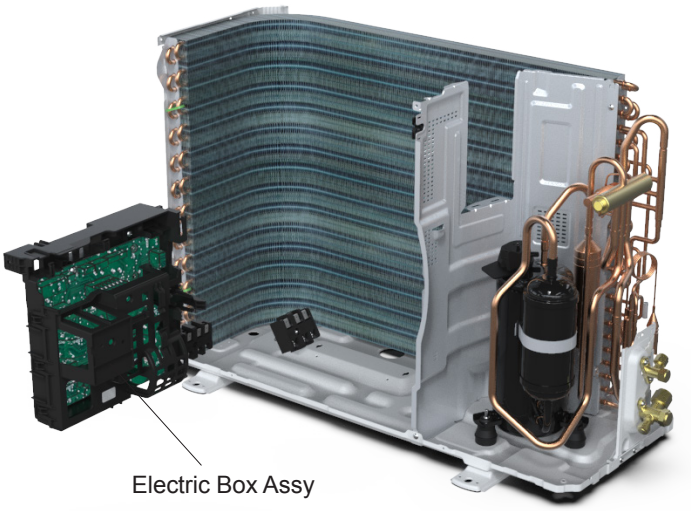
11. Remove isolation sheet	
Remove the screws fixing the isolation sheet and then remove the isolation sheet.	
12. Remove 4-way valve assy and cut-off valve	
Unsolder the welding joints connecting the 4-way valve assy and cut-off valve, remove the 4-way valve and cut-off valve. Note: Before unsoldering the welding joint, wrap the 4-way valve with a wet cloth completely to avoid damage to the valve caused by high temperature.	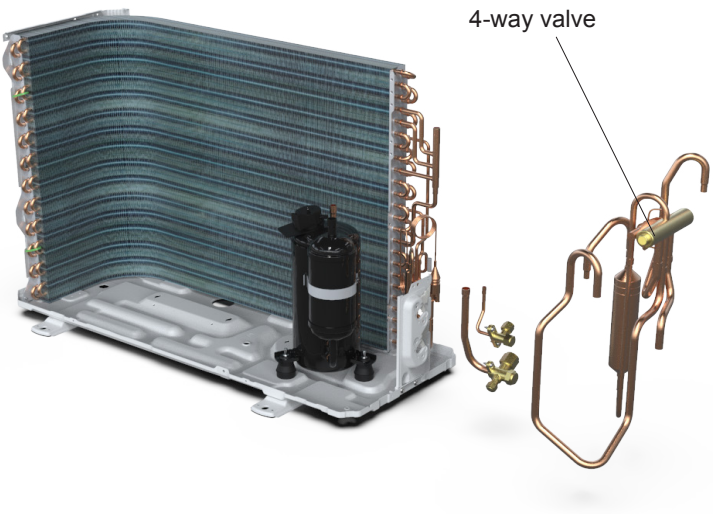

Step	Procedure
13. Remove left side plate	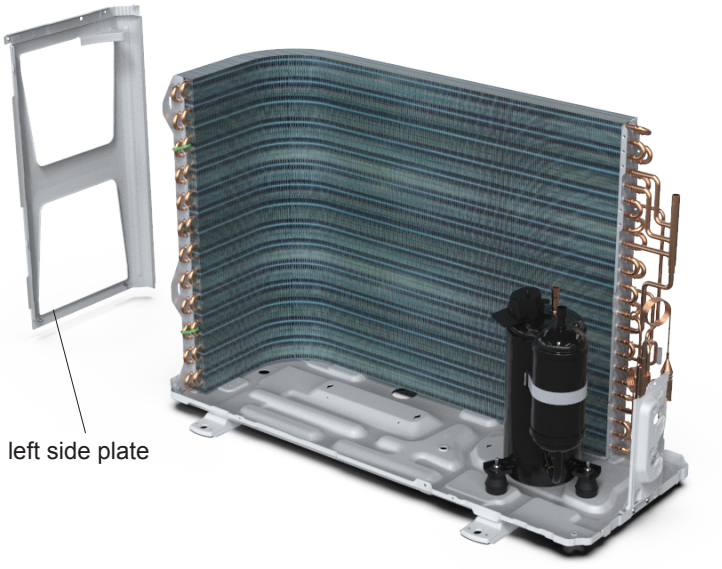
Remove the screws fixing the left side plate and then remove the left side plate.	
14. Remove condenser sub-assy	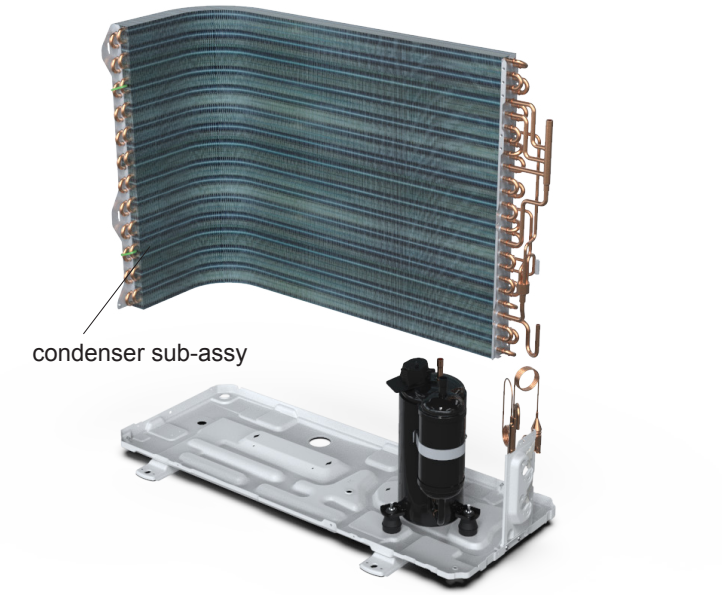
Remove the screws fixing the Remove condenser sub-assy and then remove the Remove condenser sub-assy.	
15. Remove compressor	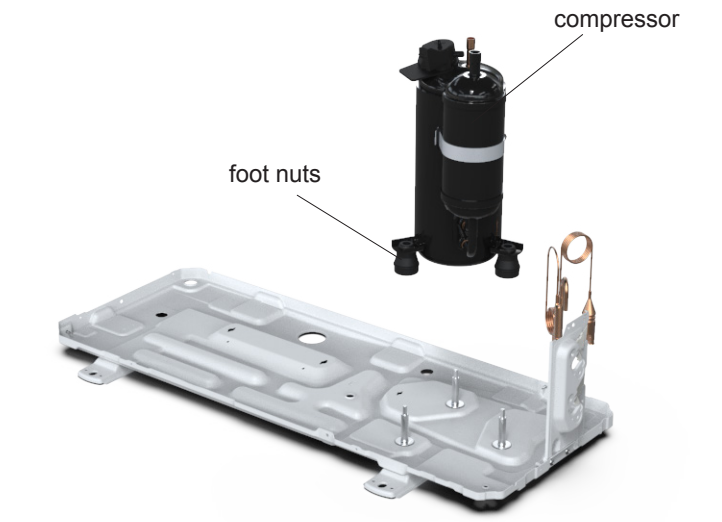
Remove the 3 foot nuts on the compressor and then remove the compressor.	

Appendix

Appendix 1: Reference Sheet of Celsius and Fahrenheit

Conversion formula for Fahrenheit degree and Celsius degree: Tf=Tcx1.8+32

Set temperature

Fahrenheit display temperature（˚F）	Fahrenheit（˚F）	Celsius（˚C）	Fahrenheit display temperature（˚F）	Fahrenheit（˚F）	Celsius（˚C）	Fahrenheit display temperature（˚F）	Fahrenheit（˚F）	Celsius（˚C）
61	60.8	16	69/70	69.8	21	78/79	78.8	26
62/63	62.6	17	71/72	71.6	22	80/81	80.6	27
64/65	64.4	18	73/74	73.4	23	82/83	82.4	28
66/67	66.2	19	75/76	75.2	24	84/85	84.2	29
68	68	20	77	77	25	86	86	30

Ambient temperature

Fahrenheit display temperature（˚F）	Fahrenheit（˚F）	Celsius（˚C）	Fahrenheit display temperature（˚F）	Fahrenheit（˚F）	Celsius（˚C）	Fahrenheit display temperature（˚F）	Fahrenheit（˚F）	Celsius（˚C）
32/33	32	0	55/56	55.4	13	79/80	78.8	26
34/35	33.8	1	57/58	57.2	14	81	80.6	27
36	35.6	2	59/60	59	15	82/83	82.4	28
37/38	37.4	3	61/62	60.8	16	84/85	84.2	29
39/40	39.2	4	63	62.6	17	86/87	86	30
41/42	41	5	64/65	64.4	18	88/89	87.8	31
43/44	42.8	6	66/67	66.2	19	90	89.6	32
45	44.6	7	68/69	68	20	91/92	91.4	33
46/47	46.4	8	70/71	69.8	21	93/94	93.2	34
48/49	48.2	9	72	71.6	22	95/96	95	35
50/51	50	10	73/74	73.4	23	97/98	96.8	36
52/53	51.8	11	75/76	75.2	24	99	98.6	37
54	53.6	12	77/78	77	25			

Appendix 2: Configuration of Connection Pipe

1.Standard length of connection pipe(More details please refer to the specifications.)

2.Min. length of connection pipe is 3m.

3.Max. length of connection pipe and max. high difference.(More details please refer to the specifications.)

4.The additional refrigerant oil and refrigerant charging required after prolonging connection pipe

● After the length of connection pipe is prolonged for 10m at the basis of standard length, you should add 5ml of refrigerant oil for each additional 5m of connection pipe.

● The calculation method of additional refrigerant charging amount (on the basis of liquid pipe):

● Basing on the length of standard pipe, add refrigerant according to the requirement as shown in the table. The additional refrigerant charging amount per meter is different according to the diameter of liquid pipe. See the following sheet.

● Additional refrigerant charging amount = prolonged length of liquid pipe X additional refrigerant charging amount per meter

Additional refrigerant charging amount for R32				
Piping size		Indoor unit throttle	Outdoor unit throttle	
Liquid pipe	Gas pipe	Cooling only, cooling and heating (g / m)	Cooling only(g/m)	Cooling and heating(g/m)
1/4”	3/8” or 1/2”	16	12	16
1/4” or 3/8”	5/8” or 3/4”	40	12	40
1/2”	3/4” or 7/8”	80	24	96
5/8”	1" or 1 1/4”	136	48	96
3/4"	/	200	200	200
7/8"	/	280	280	280

Appendix 3: Pipe Expanding Method

⚠ Note:

Improper pipe expanding is the main cause of refrigerant leakage.Please expand the pipe according to the following steps:

A:Cut the pip

- Confirm the pipe length according to the distance of indoor unit and outdoor unit.
- Cut the required pipe with pipe cutter.

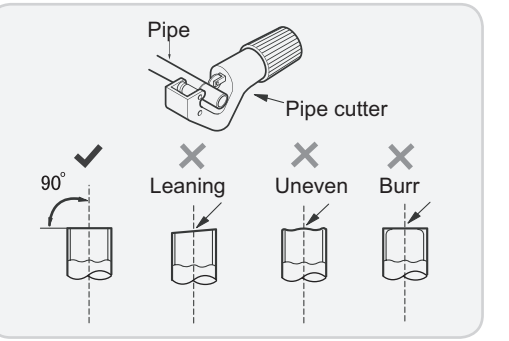

B:Remove the burrs

- Remove the burrs with shaper and prevent the burrs from getting into the pipe.

C:Put on suitable insulating pipe.

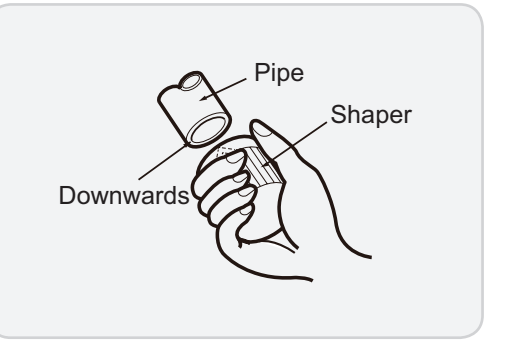

D:Put on the union nut

- Remove the union nut on the indoor connection pipe and outdoor valve; install the union nut on the pipe.

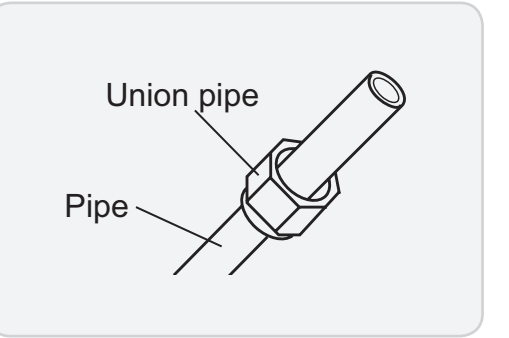

E:Expand the port

- Expand the port with expander.

⚠ Note:

- "A" is different according to the diameter, please refer to the sheet below:

Outer diameter(mm)	A(mm)	
	Max	Min
Φ6 - 6.35 (1/4")	1.3	0.7
Φ9 - Φ9.52 (3/8")	1.6	1.0
Φ12 - 12.70 (1/2")	1.8	1.0
Φ16 - 15.88 (5/8")	2.4	2.2

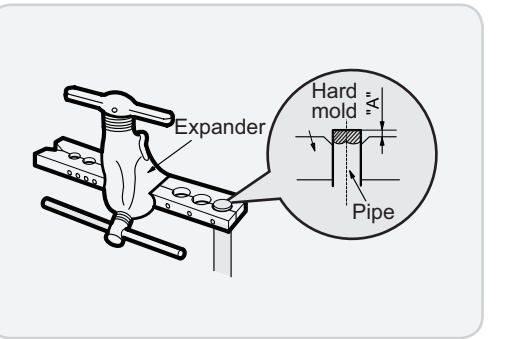

F:Inspection

- Check the quality of expanding port. If there is any blemish, expand the port again according to the steps above.

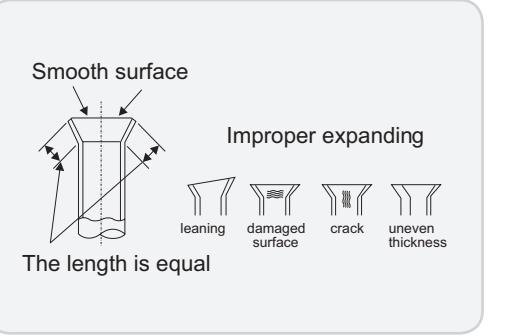

Appendix 4: List of Resistance for Temperature Sensor

Resistance Table of Ambient Temperature Sensor for Indoor and Outdoor Units(15K)

Temp(°C)	Resistance(kΩ)	Temp(°C)	Resistance(kΩ)	Temp(°C)	Resistance(kΩ)	Temp(°C)	Resistance(kΩ)
-19	138.10	0	49.02	20	18.75	40	7.97
-18	128.60	2	44.31	22	17.14	42	7.35
-16	115.00	4	40.09	24	15.68	44	6.79
-14	102.90	6	36.32	26	14.36	46	6.28
-12	92.22	8	32.94	28	13.16	48	5.81
-10	82.75	10	29.90	30	12.07	50	5.38
-8	74.35	12	27.18	32	11.09	52	4.99
-6	66.88	14	24.73	34	10.20	54	4.63
-4	60.23	16	22.53	36	9.38	56	4.29
-2	54.31	18	20.54	38	8.64	58	3.99

Resistance Table of Tube Temperature Sensors for Indoor and Outdoor (20K)

Temp(°C)	Resistance(kΩ)	Temp(°C)	Resistance(kΩ)	Temp(°C)	Resistance(kΩ)	Temp(°C)	Resistance(kΩ)
-19	181.40	20	25.01	60	4.95	100	1.35
-15	145.00	25	20.00	65	4.14	105	1.16
-10	110.30	30	16.10	70	3.48	110	1.01
-5	84.61	35	13.04	75	2.94	115	0.88
0	65.37	40	10.62	80	2.50	120	0.77
5	50.87	45	8.71	85	2.13	125	0.67
10	39.87	50	7.17	90	1.82	130	0.59
15	31.47	55	5.94	95	1.56	135	0.52

Resistance Table of Discharge Temperature Sensor for Outdoor(50K)

Temp(°C)	Resistance(kΩ)	Temp(°C)	Resistance(kΩ)	Temp(°C)	Resistance(kΩ)	Temp(°C)	Resistance(kΩ)
-30	911.400	10	98	50	17.65	90	4.469
-25	660.8	15	77.35	55	14.62	95	3.841
-20	486.5	20	61.48	60	12.17	100	3.315
-15	362.9	25	49.19	65	10.18	105	2.872
-10	274	30	39.61	70	8.555	110	2.498
-5	209	35	32.09	75	7.224	115	2.182
0	161	40	26.15	80	6.129	120	1.912
5	125.1	45	21.43	85	5.222	125	1.682

NOTE CONCERNING PROTECTION OF ENVIRONMENT



This product must not be disposed of via normal household waste after its service life, but must be taken to a collection station for the recycling of electrical and electronic devices. The symbol on the product, the operating instructions or the packaging indicate such disposal procedures. The materials are recyclable in accordance with their respective symbols. By means of re-use, material recycling or any other form of recycling old appliances you are making an important contribution to the protection of our environment. Please ask your local council where your nearest disposal station is located.

INFORMATION CONCERNING USED REFRIGERANT MEDIUM

This unit is containing fluorinated gases included in the Kyoto protocol.
The maintenance and the liquidation must be carried out by qualified personnel.

Type of refrigerant: R32
The quantity of the refrigerant: Please see the unit label.
The value GWP: 675 (1 kg R32 = 0,675 t CO_2 eq)
GWP = Global Warming Potential

 Appliance filled with flammable gas R32.

In case of quality problem or other please contact your local supplier or authorized service center.
Emergency number: 112

PRODUCER

SINCLAIR CORPORATION Ltd.
1-4 Argyll St.
London W1F 7LD
Great Britain
www.sinclair-world.com

This product was manufactured in China (Made in China).

REPRESENTATIVE

SINCLAIR Global Group s.r.o.
Purkynova 45
612 00 Brno
Czech Republic

TECHNICAL SUPPORT

SINCLAIR Global Group s.r.o.
Purkynova 45
612 00 Brno
Czech Republic
Tel.: +420 800 100 285 | Fax: +420 541 590 124
www.sinclair-solutions.com | info@sinclair-solutions.com

CE

NOTES

EN For downloading manual for this product, please enter the model name at this link:

CZ Pro stažení manuálu k tomuto produktu zadejte modelové označení do následujícího odkazu:

SK Pre stiahnutie manuálu k tomuto produktu zadajte modelové označenie do nasledujúceho odkazu:

DE Um das Handbuch für dieses Produkt herunterzuladen, geben Sie bitte den Modellnamen für diesen Link ein:

HR Za preuzimanje priručnika za ovaj proizvod unesite naziv modela na ovu vezu:

HU Termék kézikönyvének letöltéséhez írja be a modell megnevezését az alábbi linkre:

SL Za prenos navodil za uporabo tega izdelka, vnesite ime modela na tej povezavi:

RU Чтобы загрузить руководство для этого продукта, введите обозначение модели по следующей ссылке:

IT Per scaricare il manuale di questo prodotto, inserisci il nome del modello a questo link:

ES Para descargar el manual de este producto, ingrese la designación del modelo en el siguiente enlace:


sinclair
AIR CONDITIONING